ICS

Imperial Classification Society

Common Structural Rules for

Bulk Carriers and Oil Tankers

February 2022

Foreword

These Rules enter into force on February 2022 and supersede the following Rules:

- Common Structural Rules for Bulk Carriers and Oil Tankers, February 2022

These Common Structural Rules consist of two parts. Part One provides requirements common to both Double Hull Oil Tankers and Bulk Carriers and Part Two provides additional requirements applied to either Double Hull Oil Tankers or Bulk Carriers.

Summary of changes from the February 2022 Rules

	Amendment Type / No.	Adoption Date	Rule Version Date	Effective Date

Note: Full revision history for Common Structural Rules is available on IACS website, including all previous RCNs and associated TBs.

Guideline of RCN Label

1. RCN (Rule Change Notice) label is used to identify the rule change made since last rule version with the format of “RCN {Number} to {Rule Version Date}”, e.g. RCN1 to 01 JAN 2023.
2. For corrigenda update, the same format will be followed, e.g. CORR1 to 01 JAN 2023.
3. Modification and addition of rule texts:
   - RCN label is inserted at the end of modified contents.
4. Modification and addition of titles, figures and tables:
   - RCN label is inserted at the end of modified contents.
5. Deletion of rule texts and titles:
   - Replace contents by the word “DELETED”.
   - RCN label is inserted at the end of the word “DELETED”.
6. Deletion of Table:
   - Replace contents of Table by the word “DELETED” (only shown first row).
   - RCN label is inserted at the second row of Table.
7. Deletion of Figure:
   - Replace Figure by a generic graphic marked “DELETED”.
   - RCN label is inserted under the generic graphic.

Disclaimer

Copyright in these Common Structural Rules is owned by each IACS Member as at 1st July 2012.
Copyright © IACS 1st July 2012.

The IACS members, their affiliates and subsidiaries and their respective officers, employees or agents (on behalf of whom this disclaimer is given) are, individually and collectively, referred to in this disclaimer as the "IACS Members". The IACS Members assume no responsibility and shall not be liable whether in contract or in tort (including negligence) or otherwise to any person for any liability, or any direct, indirect or consequential loss, damage or expense caused by or arising from the use and/or availability of the information expressly or impliedly given in this document, howsoever provided, including for any inaccuracy or omission in it. For the avoidance of any doubt, this document and the material contained in it are provided as information only and not as advice to be relied upon by any person.

Any dispute concerning the provision of this document or the information contained in it is subject to the exclusive jurisdiction of the English courts and will be governed by English law.

Table of Contents

Part 1
General Hull Requirements 3
Part 2
Ship Types 731

01 JAN 2021

PART 1

GENERAL HULL REQUIREMENTS

Table of Contents

Chapter 1: Rule General Principles 13

Chapter 2: General Arrangement Design 67

Chapter 3: Structural Design Principles 79

Chapter 4: Loads 157

Chapter 5: Hull Girder Strength 321

Chapter 6: Hull Local Scantling 369

Chapter 7: Direct Strength Analysis 391

Chapter 8: Buckling 459

Chapter 9: Fatigue 521

Chapter 10: Other Structures 629

Chapter 11: Superstructure, Deckhouses and Hull Outfitting 659

Chapter 12: Construction 697

Chapter 13: Ship in Operation - Renewal Criteria 723

Table of Contents

Chapter 1: Rule General Principles 13

SECTION 1
Application 15
1 Scope of Application 15
2 Rule Application 17
3 Class Notations 21
4 Application of the Rules of the Society 22

SECTION 2
Rule Principles 23
1 General 23
2 General Assumptions 23
3 Design Basis 25
4 Design Principles 28
5 Rule Design Methods 31

SECTION 3
Verification of Compliance 36
1 General 36
2 Documents to be Submitted 37
3 Scope of Approval 40
4 Workmanship 41
5 Structural Details 41
6 Equivalence Procedures 41

SECTION 4
Symbols and Definitions 43
1 Primary Symbols and Units 43
2 Symbols 44
3 Definitions 47

SECTION 5
Loading Manual and Loading Instruments 61
1 General Requirements 61
2 Loading Manuals 61
3 Loading Instrument 64
4 Loading Specific to Bulk Carriers 65

Chapter 2: General Arrangement Design 67

SECTION 1
General 69
1 General 69

SECTION 2
Subdivision Arrangement 70
1 Watertight Bulkhead Arrangement 70
2 Collision Bulkhead 71
3 Aft Peak Bulkhead 71

SECTION 3
Compartment Arrangement 73
1 Cofferdams 73
2 Double Bottom 74
3 Double Side 74
4 DELETED [RCN1 to 01 JAN 2020] 75
5 DELETED [RCN1 to 01 JAN 2020] 75
6 DELETED [RCN1 to 01 JAN 2020] 75
7 Ballast Tanks 76

SECTION 4
Access and Escape Arrangement 77
1 Enclosed spaces 77
2 Cargo Area and Forward Spaces 78

Chapter 3: Structural Design Principles 79
SECTION 1
Materials 81
1 General 81
2 Hull Structural Steel 81
3 Steels for Forging and Casting 85
4 Aluminium Alloys 86
5 Other Materials and Products 88
SECTION 2
Net Scantling Approach 89
1 General 89
SECTION 3
Corrosion Additions 94
1 General 94
SECTION 4
Corrosion Protection 97
1 General 97
2 Sacrificial Anodes 97
SECTION 5
Limit States 98
1 General 98
2 Criteria 100
3 Strength Check Against Impact Loads 101
SECTION 6
Structural Detail Principles 102
1 Application 102
2 General Principles 102
3 Stiffeners 104
4 Primary Supporting Members (PSM) 108
5 Intersection of Stiffeners and Primary Supporting Members 111
6 Openings 118
7 Double Bottom Structure 122
8 Double Side Structure 127
9 Deck Structure 128
10 Bulkhead Structure 129
11 Pillars 134
SECTION 7
Structural Idealisation 135
1 Structural Idealisation of Stiffeners and Primary Supporting Members 135
2 Plates 151
3 Stiffeners 154
4 Primary Supporting Members 156

Chapter 4: Loads 157
SECTION 1
Introduction 159
1 General 159

SECTION 2
Dynamic Load Cases **162**
1 General 163
2 Dynamic Load Cases for Strength Assessment 164
3 Dynamic Load Cases for Fatigue Assessment 170
SECTION 3
Ship Motions and Accelerations **176**
1 General 177
2 Ship Motions and Accelerations 177
3 Accelerations at any Position 180
SECTION 4
Hull Girder Loads **182**
1 Application 182
2 Vertical Still Water Hull Girder Loads 183
3 Dynamic Hull Girder Loads 187
SECTION 5
External Loads **191**
1 Sea Pressure 192
2 External Pressures on Exposed Decks 208
3 External Impact Pressures for the Bow Area 211
4 External Pressures on Superstructure and Deckhouses 213
5 External Pressures on Hatch Covers 216
SECTION 6
Internal Loads **217**
1 Pressures Due to Liquids 220
2 Pressures and Forces Due to Dry Bulk Cargo 223
3 Pressures and Forces Due to Dry Cargoes in Flooded Conditions 229
4 Steel Coil Loads in Cargo Holds of Bulk Carriers 233
5 Loads on Non-Exposed Decks and Platforms 238
6 Sloshing Pressures in Tanks 239
7 Design Pressure For Tank Testing 245
SECTION 7
Design Load Scenarios **246**
1 General 247
2 Design Load Scenarios for Strength Assessment 248
3 Design Load Scenarios for Fatigue Assessment 249
SECTION 8
Loading Conditions **250**
1 Application 250
2 Common Design Loading Conditions 251
3 Oil Tankers 253
4 Bulk Carriers 271
5 Standard Loading Conditions for Fatigue Assessment 301
APPENDIX 1
Hold Mass Curves **307**
1 General 308
2 Maximum and Minimum Masses of Cargo in Each Hold 310
3 Maximum and Minimum Masses of Cargo of Two Adjacent Holds 316

Chapter 5: Hull Girder Strength 321
SECTION 1
Hull Girder Yielding Strength **323**
1 Strength Characteristics of Hull Girder Transverse Sections 324
2 Hull Girder Bending Assessment 328
3 Hull Girder Shear Strength Assessment 331

SECTION 2
Hull Girder Ultimate Strength **342**
1 Application 342
2 Checking Criteria 342
SECTION 3
Hull Girder Residual Strength **345**
1 Application 345
2 Checking Criteria 345
APPENDIX 1
Direct Calculation of Shear Flow **348**
1 Calculation Formula 348
2 Example of Calculations for a Single Side Hull Cross Section 351
APPENDIX 2
Hull Girder Ultimate Capacity **356**
1 General 356
2 Incremental-Iterative Method 357
3 Alternative Methods 367

Chapter 6: Hull Local Scantling 369
SECTION 1
General **371**
1 Application 371
SECTION 2
Load Application **372**
1 Load Combination 372
2 Design Load Sets 373
SECTION 3
Minimum Thicknesses **375**
1 Plating 375
2 Stiffeners and Tripping Brackets 376
3 Primary Supporting Members 376
SECTION 4
Plating **377**
1 Plating Subjected to Lateral Pressure 377
2 Special Requirements 379
SECTION 5
Stiffeners **383**
1 Stiffeners Subject to Lateral Pressure 383
SECTION 6
Primary Supporting Members and Pillars **386**
1 General 386
2 Primary Supporting Members Within Cargo Hold Region 386
3 Primary Supporting Members Outside Cargo Hold Region 387
4 Pillars 389

Chapter 7: Direct Strength Analysis 391
SECTION 1
Strength Assessment **393**
1 General 393
2 Net Scantling 394
3 Finite Element Types 395
4 Submission of Results 395
5 Computer Programs 396

SECTION 2
Cargo Hold Structural Strength Analysis 397
1 Objective and Scope 397
2 Structural Model 399
3 FE Load Combinations 411
4 Load Application 411
5 Analysis Criteria 429
SECTION 3
Local Structural Strength Analysis 433
1 Objective and Scope 433
2 Local Areas to be Assessed by Fine Mesh Analysis 433
3 Screening Procedure 437
4 Structural Modelling 445
5 FE Load Combinations 456
6 Analysis Criteria 456

Chapter 8: Buckling 459
SECTION 1
General 461
1 Introduction 461
2 Application 461
3 Definitions 462
SECTION 2
Slenderness Requirements 465
1 Structural Elements 465
2 Plates 465
3 Stiffeners 466
4 Primary Supporting Members 467
5 Brackets 468
6 Other Structures 470
SECTION 3
Prescriptive Buckling Requirements 472
1 General 472
2 Hull Girder Stress 473
3 Buckling Criteria 475
SECTION 4
Buckling Requirements for Direct Strength Analysis 477
1 General 477
2 Stiffened and Unstiffened Panels 477
3 Corrugated Bulkhead 487
4 Vertically Stiffened Side Shell of Single Side Skin Bulk Carrier 489
5 Struts, Pillars and Cross Ties 490
SECTION 5
Buckling Capacity 491
1 General 493
2 Buckling Capacity of Plates and Stiffeners 494
3 Buckling capacity of other structures 512
APPENDIX 1
Stress Based Reference Stresses 516
1 Stress based method 516
2 Reference Stresses 517

Chapter 9: Fatigue 521

SECTION 1
General Considerations 523
1 Rule Application for Fatigue Requirements 523
2 Definition 524
3 Assumptions 525
4 Methodology 525
5 Corrosion Model 526
6 Loading Conditions 527
7 Load Cases 527

SECTION 2
Structural Details to be Assessed 529
1 Simplified Stress Analysis 529
2 Finite Element Analysis 529

SECTION 3
Fatigue Evaluation 543
1 Fatigue Analysis Methodology 543
2 Acceptance Criteria 544
3 Reference Stresses for Fatigue Assessment 544
4 S-N Curves 548
5 Fatigue Damage Calculation 553
6 Weld Improvement Methods 556
7 Workmanship 559

SECTION 4
Simplified Stress Analysis 560
1 General 560
2 Hot Spot Stress 561
3 Hull Girder Stress 562
4 Local Stiffener Stress 563
5 Stress Concentration Factors 569

SECTION 5
Finite Element Stress Analysis 581
1 General 581
2 FE Modelling 582
3 Hot Spot Stress for Details Different From Web-Stiffened Cruciform Joints 594
4 Hot Spot Stress for Web-Stiffened Cruciform Joint 596
5 Limitations of Hot Spot Stress Approach 599
6 Screening Fatigue Assessment 600

SECTION 6
Detail Design Standard 603
1 General 603
2 Stiffener-Frame Connections 604
3 Scallops in way of Block Joints 607
4 Hopper Knuckle Connection 607
5 Horizontal Stringer Heel 617
6 Bulkhead Connection to Lower and Upper Stool 619
7 Bulkhead Connection to Inner Bottom 625
8 Lower and Upper Toe of Hold Frame 625
9 Hatch Corner 627

Chapter 10: Other Structures 629

SECTION 1
Fore Part 631
1 General 631
2 Structural Arrangement 631
3 Structure Subjected to Impact Loads 633
4 Additional Scantling Requirements 640

SECTION 2
Machinery Space 642
1 General 642
2 Machinery Space Arrangement 642
3 Machinery Foundations 644

SECTION 3
Aft Part 646
1 General 646
2 Aft Peak 646
3 Stern Frames 648
4 Special Scantling Requirements for Shell Structure 650

SECTION 4
Tanks Subject to Sloshing 651
1 General 651
2 Scantling Requirements 655

Chapter 11: Superstructure, Deckhouses and Hull Outfitting 659

SECTION 1
Superstructures, Deckhouses and Companionways 661
1 General 661
2 Structural Arrangement 662
3 Scantlings 663

SECTION 2
Bulwark and Guard Rails 665
1 General Requirements 665
2 Bulwarks 665
3 Guard Rails 667

SECTION 3
Equipment 668
1 General 668
2 Equipment Number Calculation 668
3 Anchoring Equipment 671

SECTION 4
Supporting Structure for Deck Equipment and Fittings 676
1 General 676
2 Anchoring Windlass and Chain Stopper 676
3 Mooring Winches 680
4 Cranes, Derricks, Lifting Masts and Life Saving Appliances 681
5 Bollards and Bitts, Fairleads, Stand Rollers, Chocks and Capstans 683
6 Miscellaneous Deck Fittings 689

SECTION 5
Small Hatchways 690
1 General 690
2 Small Hatchways Fitted on the Exposed Fore Deck 692

Chapter 12: Construction 697

SECTION 1
Construction and Fabrication 699

1 General 699
2 Cut-Outs, Plate Edges 700
3 Cold Forming 700
4 Hot Forming 701
5 Assembly and Alignment 702

SECTION 2
Fabrication by Welding 703

1 General 703
2 Welding Procedures, Welding Consumables and Welders 703
3 Weld Joints 703
4 Non-Destructive Examination (NDE) 705

SECTION 3
Design of Weld Joints 706

1 General 706
2 Tee or Cross Joint 707
3 Butt Joint 717
4 Other Types of Joints 718
5 Connection Details 719

Chapter 13: Ship in Operation - Renewal Criteria 723

SECTION 1
Principles and Survey Requirements 725

1 Principles 725
2 Hull Survey Requirements 726

SECTION 2
Acceptance Criteria 727

1 General 727
2 Renewal Criteria 728

PART 1 CHAPTER 1

RULE GENERAL PRINCIPLES

Table of Contents

SECTION 1
Application
1 Scope of Application
2 Rule Application
3 Class Notations
4 Application of the Rules of the Society
SECTION 2
Rule Principles
1 General
2 General Assumptions
3 Design Basis
4 Design Principles
5 Rule Design Methods
SECTION 3
Verification of Compliance
1 General
2 Documents to be Submitted
3 Scope of Approval
4 Workmanship
5 Structural Details
6 Equivalence Procedures
SECTION 4
Symbols and Definitions
1 Primary Symbols and Units
2 Symbols
3 Definitions
SECTION 5
Loading Manual and Loading Instruments
1 General Requirements
2 Loading Manuals
3 Loading Instrument
4 Loading Specific to Bulk Carriers

SECTION 1
APPLICATION

1 SCOPE OF APPLICATION

1.1 General

1.1.1

These Rules apply to the following ships:

a) Bulk carriers and double hull oil tankers and;

b) Being self-propelled ships with unrestricted navigation, and;

c) Contracted for construction on or after 1st July 2015.

Note 1: Unrestricted navigation means that the ship is not subject to any geographical restrictions (i.e. any oceans, any seasons) except that limited by the ship's capability for operation in ice.

Note 2: The 'contracted for construction' means the date on which the contract to build the ship is signed between the prospective owner and the builder. For further details regarding the date of 'contracted for construction', refer to IACS Procedural Requirement (PR) No. 29.

1.1.2

These Rules apply to ships constructed of welded steel structures and composed of stiffened plate panels. The ship's structure is to be longitudinally or transversely framed with full transverse bulkheads and intermediate web frames.

The typical arrangements of ships covered by the rules assume that the structural arrangements include:

- Double bottom, the depth of which is to be in accordance with applicable statutory requirements.
- Engine room located aft of the cargo tank/hold region.

1.1.3

Ships for which these Rules are not applicable are to comply with the relevant Rules of the Society.

1.2 Scope of application for bulk carriers

1.2.1

These Rules apply to the hull structures of single side skin and double side skin bulk carriers having a length *L* of 90 m or above.

Bulk carriers are ships which are constructed generally with single deck, double bottom, hopper side tanks and topside tanks and with single or double side skin construction in cargo hold region and intended primarily to carry dry cargoes in bulk. Typical arrangements of bulk carriers are shown in Figure 1.

Hybrid bulk carriers, where at least one cargo hold is constructed with hopper tank and topside tank, see typical arrangements in Figure 1, and other cargo holds are constructed without hopper tank and/or topside tanks, see examples of a transverse section in Figure 2, are to comply with the strength criteria defined in these Rules.

These Rules are not applicable to the following ship types:

- Ore carriers.
- Combination carrier.
- Woodchip carrier.
- Cement, fly ash and sugar carriers provided that loading and unloading is not carried out by grabs heavier than 10 tons, power shovels and other means which may damage cargo hold structure.
- Ships with inner bottom construction adapted for self-unloading.

Figure 1 : Typical arrangements of bulk carriers

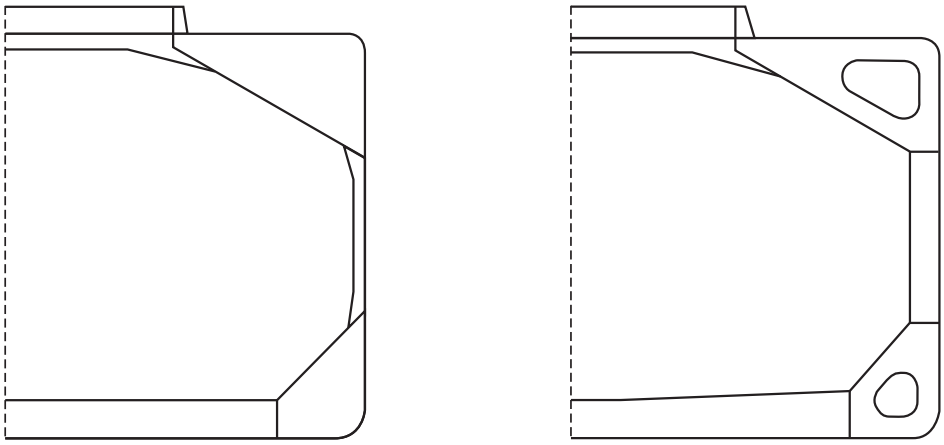

Figure 2 : Examples of transverse sections of cargo hold without hopper tank and/or topside tank

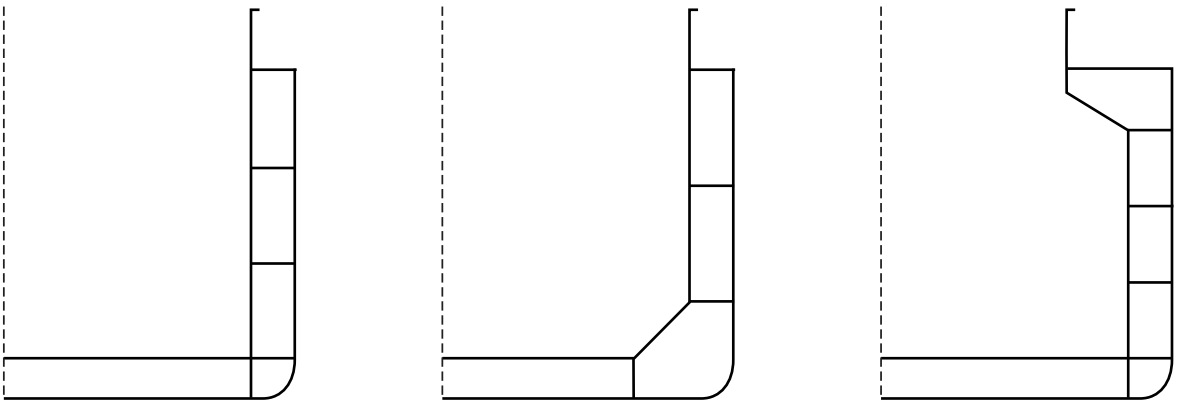

1.3 Scope of application for oil tankers

1.3.1 Length and structural arrangement application

These Rules apply to the hull structures of double hull oil tankers having length *L* of 150 m or above. Oil tanker is defined as a ship which has to comply with Annex I of MARPOL73/78.

The typical arrangements of oil tankers covered by the rules are shown in Figure 3 and assume that the structural arrangements include:

- Double side structure with breadth in accordance with statutory requirements.
- Side longitudinal, centreline longitudinal or transverse bulkheads of plane, corrugated or double skin construction.
- Single deck structure.

The cross sections shown in Figure 3 are typical examples only and other variations of cross tie and web frame arrangements are also covered.

1.3.2 Cargo temperature application

The Rules are based on the following design temperatures for the cargo:

a) maximum temperature: 80°C

b) minimum temperature: 0°C.

Figure 3 : Typical arrangements of double hull oil tankers

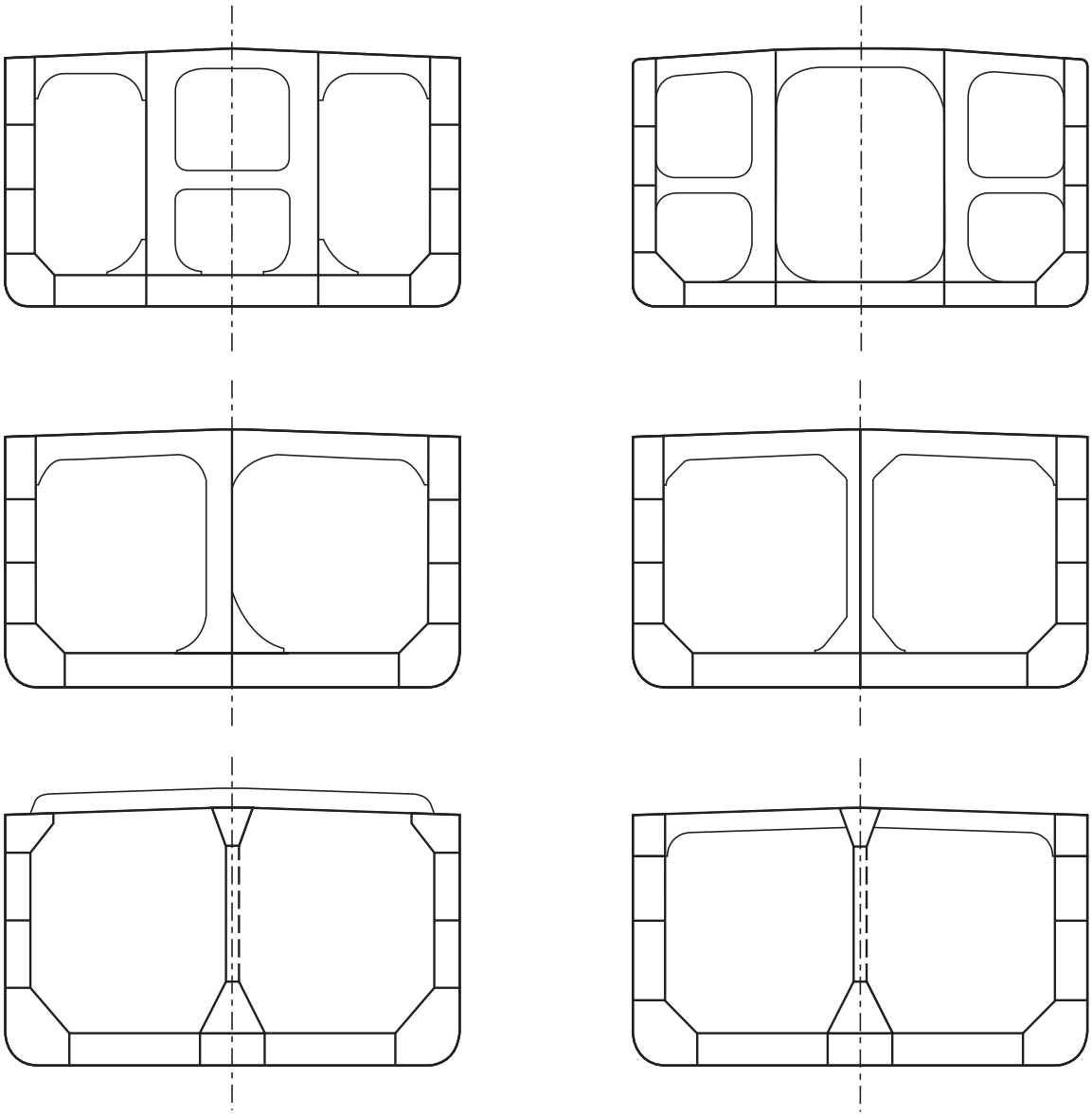

2 RULE APPLICATION

2.1 Rule description

2.1.1 Rule structure

The rules contain 2 parts:

- Part 1: General hull requirements.
- Part 2: Ship types.

The parts are structured in chapters giving instructions for detail application and requirements which are applied in order to satisfy the rule objectives.

2.1.2 Numbering

The system of numbering is given in Table 1.

Table 1 : Rule numbering and abbreviations

Order	Levels	Example	Abbreviations
1	Part	Part 1 – General Hull Requirements	Pt 1
2	Chapter	Chapter 1 – Rule General Principle	Ch 1
3	Section	Section 1 – Application	Sec 1
4	Article	1. Scope of Application	[1]
5	Sub-article	1.1 General	[1.1]
6	Requirements	1.1.1 These Rules apply to…	[1.1.1]

2.2 Rule Requirements

2.2.1 Part 1

Part 1 of the Rules provides requirements common to all ship types as follow:

- Chapter 1: Rule General Principles.
- Chapter 2: General Arrangement Design.
- Chapter 3: Structural Design Principles.
- Chapter 4: Loads.
- Chapter 5: Hull Girder Strength.
- Chapter 6: Hull Local Scantling.
- Chapter 7: Direct Strength Analysis.
- Chapter 8: Buckling.
- Chapter 9: Fatigue.
- Chapter 10: Other Structure.
- Chapter 11: Superstructure, Deckhouses and Hull Outfitting.
- Chapter 12: Construction.
- Chapter 13: Ship in Operation - Renewal Criteria.

The provisions of the Ch 1, 2, 3, 4, 5, 6, 8, 12, 13 and Ch 10, Sec 4 are applicable all over the ships length.

The Ch 7, 9, 10 and 11 define their own scope of application.

2.2.2 Part 2

Part 2 of the Rules provides requirements coming in addition to those of Part 1 specific for ship types and is divided as follow:

- Chapter 1: Bulk Carriers.
- Chapter 2: Oil Tankers.

2.2.3 Application of the Rules

The ship arrangement and scantlings are to comply with the relevant parts and chapters of the Rules as it is given in Figure 4.

Figure 4 : Application of the Rules

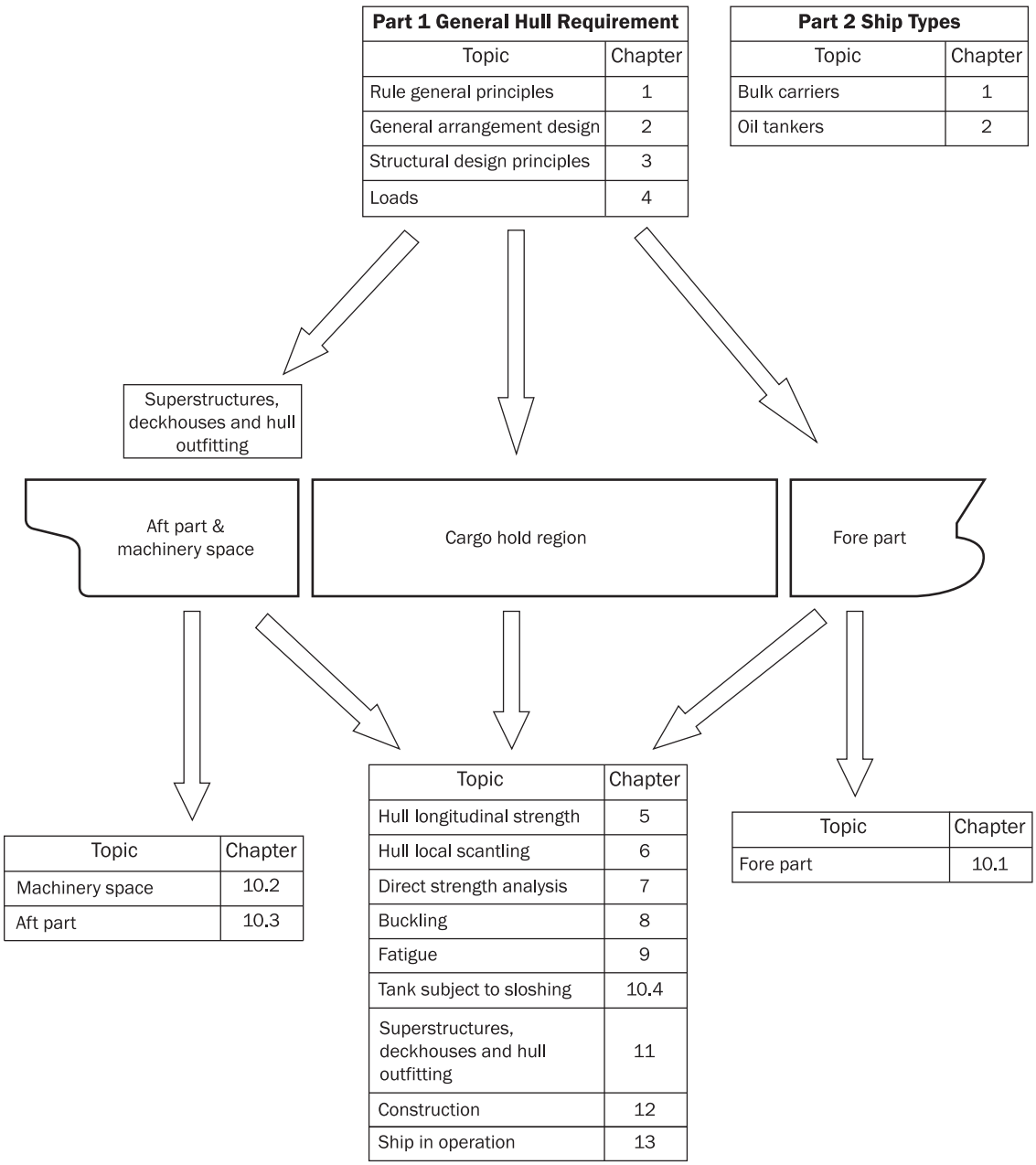

2.2.4 General criteria

The ship arrangement, the proposed details and the offered scantling in net or gross, as the case may, are to comply with the requirements and the minimum scantling given in the Rules.

2.3 Structural requirements

2.3.1 Materials and welding

The Rules applies to welded hull structures made of steel having characteristics complying with requirements in Ch 3, Sec 1. The Rules applies also to welded steel ships in which parts of the hull, such as superstructures or small hatch covers, are built in material other than steel, complying with requirements in Ch 3, Sec 1.

Ships whose hull materials are different than those given in the first paragraph are to be individually considered by the Society, on the basis of the principles and criteria adopted in the present rules.

2.4 Ship parts

2.4.1 General

For the purpose of application of the present rules, the ship is considered as divided into the following five parts:

- Fore part.
- Cargo hold region.
- Machinery space.
- Aft part.
- Superstructures and deckhouses.

2.4.2 Fore part

The fore part is that part of the ship located forward of the collision bulkhead, i.e.:

- The fore peak structures.
- The stem.

2.4.3 Cargo hold region

The cargo hold region is the part of the ship that contains cargo holds, cargo tanks, and slop tanks. It includes the full breadth and depth of the ship, the collision bulkhead and the transverse bulkhead at its aft end. The cargo hold region does not include the pump room, if any.

2.4.4 Machinery space

The machinery space is the part of the ship between the aft peak bulkhead and the transverse bulkhead at the aft end of the cargo hold region and includes the pump room, if any.

2.4.5 Aft part

The aft part includes the structures located aft of the aft peak bulkhead.

2.4.6 Superstructures and deckhouses

A superstructure is a decked structure on the freeboard deck extending from side to side of the ship or with the side plating not being inboard of the shell plating more than 0.04 *B*.

A deckhouse is a decked structure on the freeboard or superstructure deck which does not comply with the definition of a superstructure.

2.5 Limits of application to lifting appliances

2.5.1 Definition

The fixed parts of lifting appliances, considered as an integral part of the hull, are the structures permanently connected by welding to the ship's hull (for instance, crane pedestals, masts, king posts, derrick heel seatings, etc, excluding cranes, derrick booms, ropes, rigging accessories, and, generally, any removable parts), only for that part directly interacting with the hull structure.

2.5.2 Rule application for lifting appliances

The fixed parts of lifting appliances and their connections to the ship's structure may be covered by the Society's rules for lifting appliances, and/or by the certification (especially the issuance of the Register of ship's lifting appliances and cargo handling gear) of lifting appliances when required.

2.5.3 Structures supporting fixed lifting appliances

The design of the structure supporting fixed lifting appliances and the structure that might be called to support a mobile appliance is to be designed taking into account the additional loads that may be imposed on them by the operation of the appliance and environmental conditions as declared by the builder or its sub-contractors.

2.6 Novel designs

2.6.1

Ships with novel features or unusual hull design are to comply with Ch 1, Sec 3, [6.2].

3 CLASS NOTATIONS

3.1 Class notation CSR

3.1.1 Application

In addition to the class notations granted by the Society and to the service features and additional class notations defined hereafter, ships fully complying with these Rules are assigned the notation CSR.

3.2 Class notation for bulk carriers

3.2.1 Additional service features BC-A, BC-B and BC-C

The following requirements apply to ships, as defined in [1.2.1], having length *L* of 150 m or above.

Bulk carriers are to be assigned one of the following additional service features:

a) BC-A: For bulk carriers designed to carry dry bulk cargoes of cargo density 1.0 t/m^3 and above with specified holds empty at maximum draught in addition to BC-B conditions.

b) BC-B: For bulk carriers designed to carry dry bulk cargoes of cargo density of 1.0 t/m^3 and above with all cargo holds loaded in addition to BC-C conditions.

c) BC-C: For bulk carriers designed to carry dry bulk cargoes of cargo density less than 1.0 t/m^3.

The following additional service features are to be provided giving further detailed description of limitations to be observed during operation as a consequence of the design loading condition applied during the design in the following cases:

- {Maximum cargo density in t/m^3} for additional service features BC-A and BC-B if the maximum cargo density is less than 3.0 t/m^3, see also Ch 4, Sec 8, [4.1].
- {No MP} for all additional service features when the ship has not been designed for loading and unloading in multiple ports in accordance with the conditions specified in Ch 4, Sec 8, [4.2.2].
- {Holds a, b, ... may be empty} for additional service feature BC-A, see also Ch 4, Sec 8, [4.1].
- {Block loading} for additional service feature BC-A, when the ship is intended to operate in alternate block load condition, see also Ch 4, Sec 8, [4.2.3], item d.

3.2.2 Additional class notation GRAB [X]

The additional class notation GRAB [X] is mandatory for ships having one of the additional service features BC-A or BC-B, according to [3.2.1]. For these ships, the requirements for the GRAB [X] notation given in Pt 2, Ch 1, Sec 6 are to comply with for an unladen grab weight X taken not less than:

- 35 t for ships with $L \geq 250$ m,
- 30 t for ships with 200 m $\leq L <$ 250 m,
- 20 t otherwise.

For all other ships, the additional class notation GRAB [X] is voluntary.

4 APPLICATION OF THE RULES OF THE SOCIETY

4.1 Structural parts not covered by these Rules

4.1.1

Designer should take care that parts of the structure that these Rules do not cover comply with the relevant requirements of the Society's Rule.

SECTION 2
RULE PRINCIPLES

1 GENERAL

1.1 Rule objectives

1.1.1

The objectives of the Rules are to establish the classification minimum requirements to mitigate the risks of major hull structural failure in order to help improve the safety of life, environment and property and to contribute to the durability of the hull structure for the ship's design life.

1.1.2

The sub-sections contain:

- The general assumptions pertaining to the design, construction and operation of the ship and give information on the assumed roles of the Society, builders, designers and owners.
- The design basis which specifies the premises on which the Rules are based in terms of design parameters and assumptions about the ship operation.
- The design principles which define the fundamental principles used for the structural requirements in the Rules with respect to loads and structural capacity.
- The rule design methods which describe how the design principles are applied and the criteria are used in view of [1.1.1].

2 GENERAL ASSUMPTIONS

2.1 International and national regulations

2.1.1

Ships are to be designed, constructed and operated in compliance with the regulatory framework prescribed by the International Maritime Organisation (IMO) and implemented by National Administrations or the Society on their behalf. The builder is to give due consideration to the influence on the structural design and arrangement from the relevant requirements of the International Labour Organization (ILO) implemented by National Administrations or the Society on their behalf.

2.1.2

The Rules are based on the assumption that the applicable statutory requirements are complied with.

2.2 Application and implementation of the Rules

2.2.1

The Society develops and publishes the rules for classification of ships, containing minimum requirements for the hull structure and essential engineering systems. The Society verifies compliance with the classification requirements and the applicable international regulations when authorised by a National Administration during design, construction and operation of the ship.

2.2.2

These Rules address the hull structural aspects of classification and do not include requirements related to the verification of compliance with the Rules during construction and operation. In order to achieve the safety level targeted by the Rules, a number of aspects related to design, construction and operation of the ship are assumed to be adhered to by the parties involved in the application and implementation of the Rules. A summary of these assumptions are given in the following:

a) General aspects:

- Relevant information and documentation involved in the design, construction and operation is communicated between the builder, the designer, the Society and the owner as agreed between builder and owner. Design documentation according to Rule requirements is provided.
- Quality systems are applied to the design, construction, operation and maintenance activities by owners and other relevant parties to ensure the compliance with the requirements of the Rules.

b) Design aspects:

- The owner specifies the intended use of the ship, and the ship is designed according to operational requirements as well as the structural requirements given in the Rules.
- The builder identifies and documents the operational limits for the ship so that the ship can be safely and efficiently operated within these limits.
- Verification of the design is performed by the builder to check compliance with provisions contained in the Rules in addition to national and international regulations.
- The design is performed by appropriately qualified, competent and experienced personnel.
- The Society performs a technical appraisal of the design plans and related documents for a ship to verify compliance with the appropriate classification Rules.
- For spaces where lighting and ventilation are to be fitted, the builder is to give consideration to the influence on the structural design and arrangement from the relevant requirements of International Conventions such as SOLAS and MLC2006 Regulation 3.1 - Accommodation and recreational facilities, and Society's rules if any. Human element considerations, including enhanced safety and productivity, may be considered using Recommendation No. 132 or other ergonomic standards accepted by the Society.
- For continually manned spaces where noise is to be minimised, the builder is to give consideration to the influence on the structural design and arrangement from the relevant requirements of SOLAS Ch II-1, Reg.3-12 and "The Code on Noise Levels Onboard Ships" adopted at MSC.337(91).
- For continually manned spaces where vibration is to be minimised, the builder is to give consideration to the influence on the structural design and arrangement from the relevant requirements of relevant statutory requirements such as MLC 2006 Regulation 3.1 - Accommodation and recreational facilities. Human element considerations, including enhanced safety and productivity, may be considered using Recommendation No. 132 or other ergonomic standards accepted by the Society.

c) Construction aspects:

- The builder provides adequate supervision and quality control during the construction.
- Construction is carried out by qualified and experienced personnel.
- Workmanship, including alignment and tolerances, is in accordance with acceptable shipbuilding standards.
- The Society performs surveys to verify that the construction and quality control are in accordance with the classification features of approved plans and procedures.

d) Operational aspects:

- Personnel involved in operations are aware of, and comply with, the operational limitations of the ship.

- Operations personnel receive sufficient training such that the ship is properly handled so that the loads and resulting stresses imposed on the structure are minimised.
- The ship is maintained in adequate condition and in accordance with the Society survey scheme and international and national regulations and requirements.
- The Society performs surveys to verify that the ship is maintained in class in accordance with the Society survey scheme.

3 DESIGN BASIS

3.1 General

3.1.1

This sub-section specifies the design parameters and the assumptions about the ship operation that are used as the basis of the design principles of the Rules.

3.1.2

Ships are to be designed to withstand, in the intact condition, the environmental conditions as defined in [5.3.2] and [5.3.3] anticipated during the design life, for the appropriate loading conditions. Structural strength is to be determined against buckling and yielding. Ultimate strength calculations have to include ultimate hull girder capacity and ultimate strength of plates and stiffeners.

3.1.3 Residual strength

Ships having a length *L* of 150 m or above are to be designed to have sufficient reserve strength to withstand the loads in damaged conditions, e.g. collision, grounding or flooded scenarios. Residual strength calculations are to take into account the ultimate reserve capacity of the hull girder, considering permanent deformation and post-buckling behaviour as specified in Ch 5, Sec 3.

3.1.4 Finite element analysis

The scantling of the structural members within the cargo hold region of ships having a length *L* of 150 m or above is to be assessed according to the requirements specified in Pt 1, Ch 7.

3.1.5 Fatigue life

Ships having a length *L* of 150 m or above are to be assessed according to the design fatigue life for structural details specified in Pt 1, Ch 9.

3.1.6

The Rules are applicable for ships in compliance with the specified design basis. Special consideration is given to deviations from this design basis.

3.1.7

The design basis used for the design of each ship, as communicated by the builder to the owner, is to be documented and submitted to the Society as part of the design review and approval. All changes of the design basis are to be formally advised to the Society and the owner for approval.

3.2 Hull form limit

3.2.1

The Rules assume the following hull form with respect to environmental loading:

- $L < 500$ m

- $C_B > 0.6$
- $L/B > 5$
- $B/D < 2.5$

For ships over 350 m in length, special consideration is to be made for the wave loads by the Society.

3.3 Design life

3.3.1

A design life of 25 years is assumed for selecting ship design parameters. The specified design life is the nominal period that the ship is assumed to be exposed to operating conditions.

3.4 Environmental conditions

3.4.1 North Atlantic wave environment

The rule requirements are based on a ship trading in the North Atlantic wave environment for its entire design life.

3.4.2 Wind and current

The effects of wind and current with regard to the strength of the structure are not considered.

3.4.3 Ice

The effects of ice and ice accretion are not taken into account by the Rules.

3.4.4 Design temperatures

The Rules assume that the structural assessment of hull strength members is valid for the following design temperatures:

- Lowest mean daily average temperature in air is -10°C.
- Lowest mean daily average temperature in seawater is 0°C.

Ships intended to operate in areas with lower mean daily average temperature, e.g. regular service during winter seasons to Arctic or Antarctic waters are subject to the requirements as specified by the Society.

In the above, the following definitions apply:

Mean : Statistical mean over observation period (at least 20 years).

Daily Average : Average during one day and night.

Lowest : Lowest during year.

For seasonally restricted service the lowest value within the period of operation applies.

3.4.5 Thermal loads

The effects of thermal loads and residual stresses are not taken into account in the Rules.

3.5 Operating conditions

3.5.1

The Rules specify minimum loading conditions that are to be assessed for compliance.

Specification of loading conditions other than those required by the Rules is the responsibility of the owner. These other loading conditions are to be documented and also be assessed for compliance.

3.5.2

The Rules assume the following:

- The ballast cargo hold of bulk carriers is not to be partly filled in seagoing operations.
- Ballasting and deballasting operations in the ballast cargo hold of bulk carriers are not to be performed when the weather is not fair.

3.6 Operating draughts

3.6.1

The design operating draughts are to be specified by the builder/designer subject to acceptance by the owner and are to be used to derive the appropriate structural scantlings. All operational loading conditions in the loading manual are to comply with the specified design operating draughts. The following design operating draughts are as a minimum to be considered:

- Scantling draught for the assessment of structure.
- Minimum ballast draught at midship for assessment of structure.
- Minimum heavy ballast draught at midship for assessment of bulk carrier structure.
- Minimum forward draughts for the assessment of bottom structure forward subjected to slamming loads, $T_{F\text{-}e}$ and $T_{F\text{-}f}$, with and without ballast tanks in way filled.

  $T_{F\text{-}e}$ and $T_{F\text{-}f}$ are defined in Ch 4, Sec 5, [3.2.1]
- For oil tankers: maximum draughts amidships for both conditions:
  - with all cargo tanks abreast empty.
  - with centre cargo tank empty and wing cargo tanks full.
  - with centre cargo tank full and wing cargo tanks empty.
- For bulk carriers carrying steel coils: maximum draught amidships for steel coil loading conditions.

3.7 Internal environment

3.7.1 Oil cargo density for strength assessment

A density of 1.025 t/m^3, or a higher value if specified by the designer, is to be used for oil cargoes for the strength assessment of all relevant tank structures.

3.7.2 Oil cargo density for fatigue assessment

For the fatigue assessment of cargo tank structures, the mean density is to be taken as 0.9 t/m^3, or a higher value if specified by the designer.

3.7.3 Dry cargo density

The density for dry bulk cargo is to be taken according to the specifications in Ch 4, Sec 6, [2.3].

3.7.4 Water ballast density

A density of 1.025 t/m^3 is to be used for water ballast.

3.8 Structural construction and inspection

3.8.1

The structural requirements included in the Rules are developed with the assumption that construction and repair follow acceptable shipbuilding and repair standards and tolerances. The Society may require that

additional attention is paid to critical areas of the structure by the builder during construction and by the owner for repair after the ship's delivery.

3.8.2

As an objective, ships are to be built in accordance with controlled quality production standards using approved materials as necessary.

3.8.3

The Rules define the renewal criteria for the individual structural items. The structural requirements included are developed on the assumption that the structure is subject to appropriate monitoring by the owner once the ship is in operation and to periodical survey in accordance with Society rules and regulations.

3.8.4

Tank strength and tightness testing are to be carried out as a part of the verification scheme according to the Rules and/or documents of the individual Society which incorporate IACS UR S14.

3.8.5

Specifications for material manufacturing, assembling, joining and welding procedures, steel surface preparation and coating are to be included in the ship construction quality procedures. It is assumed that the owner has approved these builder specifications.

3.9 Maximum service speed

3.9.1

The maximum service speed is to be specified in the design specification. Although the hull structure verification criteria takes into account the service speed this does not relieve the responsibilities of the owner and personnel to properly handle the ship, see item (d) in [2.2.2].

3.10 Owner's extras

3.10.1

Owner's specification of requirements above the general classification or statutory requirements may affect the structural design. Owner's extras may include requirements for:

- Vibration analysis.
- Maximum percentage of high strength steel.
- Additional scantlings above that required by the Rules.
- Additional design margin on the loads specified by the Rules, etc.
- Improved fatigue resistance, in the form of a specified increase in design fatigue life or equivalent.

Owner's extras are not specified by these Rules. Owner's extras, if any, that may affect the structural design are to be clearly specified in the design documentation.

4 DESIGN PRINCIPLES

4.1 Overall principles

4.1.1 Introduction

This sub-section defines the underlying design principles of the Rules in terms of loads, structural capacity models and assessment criteria and also construction and in-service aspects.

4.1.2 General

The Rules are based on the following overall principles:

- The safety of the structure can be assessed by addressing the potential structural failure mode(s) when the ship is subjected to operational loads and environmental loads/conditions.
- The design complies with the design basis, see Ch 1, Sec 3.
- The structural requirements are based on consistent design load sets which cover the appropriate operating modes of a bulk carrier or oil tanker.

The ship's structure is designed such that:

- It has a degree of redundancy. The ship's structure should work in a hierarchical manner and, in principle, failure of structural elements lower down in the hierarchy do not result in immediate consequential failure of elements higher up in the hierarchy.
- It has sufficient reserve strength to withstand the wave and internal loads in damaged conditions that are reasonably foreseeable e.g. collision, grounding or flooding scenarios. Residual strength calculations are to take into account the ultimate reserve capacity of the hull girder, considering permanent deformation and post-buckling behaviour.
- The incidence of in-service cracking is minimised, particularly in locations which affect the structural integrity or containment integrity, affect the performance of structural or other systems or are difficult to inspect and repair.
- It has adequate structural redundancy to survive in the event that the structure is accidentally damaged by a minor impact leading to flooding of any compartment.

4.1.3 Limit state design principles

The rules are based on the principles of limit state design.

Limit state design is a systematic approach where each structural element is evaluated with respect to possible failure modes related to the design scenarios identified. For each retained failure mode, one or more limit states may be relevant. By consideration of all relevant limit states, the limit load for the structural element is found as the minimum limit load resulting from all the relevant limit states.

The limit states defined in Ch 3, Sec 5 are divided into the four categories: Serviceability Limit State (SLS), Ultimate Limit State (ULS), Fatigue Limit State (FLS) and Accidental Limit State (ALS).

The Rules include requirements to cover the relevant limit states for the various parts of the structure.

4.2 Loads

4.2.1 Design load scenarios

The structural assessment of the structure is based on the design load scenarios encountered by the ship. Refer to Ch 4, Sec 7.

The design load scenarios are based on static and dynamic loads as given below:

- Static design load scenario (S):

  Covers application of relevant static loads and typically covers load scenarios in harbour, sheltered water, or tank testing.

- Static plus Dynamic design load scenario (S+D):

  Covers application of relevant static loads and simultaneously occurring dynamic load components and typically cover load scenarios for seagoing operations.

- Impact design load scenario (I):

  Covers application of impact loads such as bottom slamming and bow impact encountered during seagoing operations.

- Sloshing design load scenario (SL):

  Covers application of sloshing loads encountered during seagoing operations.
- Fatigue design load scenario (F):

  Covers application of relevant dynamic loads.
- Accidental design load scenario (A):

  Covers application of some loads not occurring during normal operations.

4.3 Structural capacity assessment

4.3.1 General

The basic principle in structural design is to apply the defined design loads, identify plausible failure modes and employ appropriate capacity models to verify the required structural scantlings.

4.3.2 Capacity models for ULS, SLS and ALS

The strength assessment method is to be capable of analysing the failure mode in question to the required degree of accuracy.

The structural capacity assessment methods are in either a prescriptive format or require the use of more advanced calculations such as finite element analysis methods.

The formulae used to determine stresses, deformations and capacity are deemed appropriate for the selected capacity assessment method and the type and magnitude of the design load set.

4.3.3 Capacity models for FLS

The fatigue assessment method provides Rule requirements to assess structural details against fatigue failure.

The fatigue capacity model is based on a linear cumulative damage summation (Palmgren-Miner's rule) in combination with a design S-N curve, a reference stress range and an assumed long-term stress distribution curve.

The fatigue capacity assessment models are in either a prescriptive format or require the use of more advanced calculations, such as finite element analysis methods. These methods account for the combined effects of global and local dynamic loads.

4.3.4 Net scantling approach

The objective of the net scantling approach is to:

- Provide a relationship between the thickness used for strength calculations during the newbuilding stage and the minimum thickness accepted during the operational phase.
- Enable the status of the structure with respect to corrosion to be clearly ascertained throughout the life of the ship.

The net scantling approach distinguishes between local and global corrosion. Local corrosion is defined as uniform corrosion of local structural elements, such as a single plate or stiffener. Global corrosion is defined as the overall average corrosion of larger areas, such as primary supporting members and the hull girder. Both the local and global corrosion are used as a basis for the newbuilding review and are to be assessed during operation of the ship.

No credit is given in the assessment of structural capability for the presence of coatings or similar corrosion protection systems.

The application of the net thickness approach to assess the structural capacity is specified in Ch 3, Sec 2.

4.3.5 Intact structure

All strength calculations for ULS, SLS and FLS are based on the assumption that the structure is intact. The residual strength of the ship in a structurally damaged condition is assessed for ALS.

5 RULE DESIGN METHODS

5.1 General

5.1.1 Design methods

Scantling requirements are specified to cover the relevant limit states (ULS, SLS, FLS and ALS) as necessary for various structural parts.

The criteria for the assessment of the scantlings are based on one of the following design methods:

- Working Stress Design (WSD) method, also known as the permissible or allowable stress method.
- Partial Safety Factor (PSF) method, also known as Load and Resistance Factor Design (LRFD).

For both WSD and PSF, two design assessment conditions and corresponding acceptance criteria are given. These conditions are associated with the probability level of the combined loads, A and B.

- The WSD method has the following composition:

$$W_{stat} \leq \eta_1 R \quad \text{for condition A.}$$

$$W_{stat} + W_{dyn} \leq \eta_2 R \quad \text{for condition B.}$$

where:

W_{stat} : Simultaneously occurring static loads (or load effects in terms of stresses).

W_{dyn} : Simultaneously occurring dynamic loads. The dynamic loads are typically a combination of local and global load components.

R : Characteristic structural capacity (e.g. specified minimum yield stress or buckling capacity).

η_i : Permissible utilisation factor (resistance factor). The utilisation factor includes consideration of uncertainties in loads, structural capacity and the consequence of failure.

- The PSF method has the following composition:

$$\gamma_{stat-1} W_{stat} + \gamma_{dyn-1} W_{dyn} \leq \frac{R}{\gamma_R} \quad \text{for condition A.}$$

$$\gamma_{stat-2} W_{stat} + \gamma_{dyn-2} W_{dyn} \leq \frac{R}{\gamma_R} \quad \text{for condition B.}$$

where:

γ_{stat-i} : Partial safety factor that accounts for the uncertainties related to static loads.

γ_{dyn-i} : Partial safety factor that accounts for the uncertainties related to dynamic loads.

γ_R : Partial safety factor that accounts for the uncertainties related to structural capacity.

The acceptance criteria for both the WSD method and PSF method are calibrated for the various requirements such that consistent and acceptable safety levels for all combinations of static and dynamic load effects are derived.

5.2 Minimum requirements

5.2.1

Minimum requirements specify the minimum scantling requirements which are to be applied irrespective of all other requirements, hence thickness below the minimum is not allowed.

The minimum requirements are usually in one of the following forms:

- Minimum thickness, which is independent of the specified minimum yield stress.
- Minimum stiffness and proportion, which are based on buckling failure modes.

5.3 Load-capacity based requirements

5.3.1 General

In general, the Working Stress Design (WSD) method is applied in the requirements, except for the hull girder ultimate strength criteria where the Partial Safety Factor (PSF) method is applied. The partial safety factor format is applied for this highly critical failure mode to better account for uncertainties related to static loads, dynamic loads and capacity formulations.

The identified load scenarios are addressed by the Rules in terms of design loads, design format and acceptance criteria set, as given in Table 2. The table is schematic and only intended to give an overview.

Load based prescriptive requirements provide scantling requirements for all plating, local support members, most primary supporting members and the hull girder and cover all structural elements including deckhouses, foundations for deck equipment.

In general, these requirements explicitly control one particular failure mode and hence several requirements may be applied to assess one particular structural member.

5.3.2 Design loads for SLS, ULS and ALS

The structural assessment of compartment boundaries, e.g. bulkheads, is based on loading condition deemed relevant for the type of ship and the operation the ship is intended for.

To provide consistency of approach, standardised Rule values for parameters, such as GM, R_{roll}, T_{sc} and C_B are applied to calculate the Rule load values.

The probability level of the dynamic global, local and impact loads (see Table 1) is 10^{-8} and is derived using the long-term statistical approach.

The probability level of the sloshing loads (see Table 1) is 10^{-4}.

The design load scenarios for structural verification apply the applicable simultaneously acting local and global load components. The relevant design load scenarios are given in Ch 4, Sec 7.

The simultaneously occurring dynamic loads are specified by applying a dynamic load combination factor to the dynamic load values given in Ch 4. The dynamic load combination factors that define the dynamic load cases are given in Ch 4, Sec 2.

Design load conditions for the hull girder ultimate strength are given in Ch 5, Sec 2.

5.3.3 Design loads for FLS

For the fatigue requirements given in Ch 9, the load assessment is based on the expected load history and an average approach is applied. The expected load history for the design life is characterised by the 10^{-2} probability level of the dynamic load value, the load history for each structural member is represented by Weibull probability distributions of the corresponding stresses.

The considered wave induced loads include:

- Hull girder loads (i.e. vertical and horizontal bending moments).
- Dynamic wave pressures.
- Dynamic pressure from cargo.

The load values are based on Rule parameters corresponding to the loading conditions, e.g. GM, C_B, and the applicable draughts at amidships.

The simultaneously occurring dynamic loads are accounted for by combining the stresses due to the various dynamic load components. The stress combination procedure is given in Ch 9.

Table 1 : Load scenarios and corresponding rule requirements

Operation	Load type	Design load scenario	Acceptance criteria
Seagoing operations			
Transit	Static and dynamic loads in heavy weather	S + D	AC-SD
	Impact loads in heavy weather	Impact (I)	AC-I
	Internal sloshing loads	Sloshing (SL)	AC-S
	Cyclic wave loads	Fatigue (F)	-
BWE by flow through or sequential methods	Static and dynamic loads in heavy weather	S + D	AC-SD
Harbour and sheltered operations			
Loading, unloading and ballasting	Typical maximum loads during loading, unloading and ballasting operations	S	AC-S
Tank testing	Typical maximum loads during tank testing operations	S	AC-S
Special conditions in harbour	Typical maximum loads during special operations in harbour, e.g. propeller inspection afloat or dry-docking loading conditions	S	AC-S
Accidental condition			
Flooded conditions	Typically maximum loads on internal watertight subdivision structure in accidental flooded conditions	A	AC-SD AC-S

Table 2 : Acceptance criteria - prescriptive requirements

Acceptance criteria	Plate panels and local support members (1)		Primary supporting members (1)		Hull girder members	
	Yield	Buckling	Yield	Buckling	Yield	Buckling
AC-S AC-SD	Permissible stress: Ch 6, Sec 4 Ch 6, Sec 5	Control of stiffness and proportions: Ch 8, Sec 2	Permissible stress: Ch 6, Sec 6 Pt 2, Ch 1, Sec 4 Pt 2, Ch 2, Sec 3	Control of stiffness and proportions: Ch 8, Sec 1 Ch 8, Sec 2 Pillar buckling	Permissible stress: Ch 5, Sec 1	Allowable buckling utilisation factor: Ch 8, Sec 1, [3]
AC-I	Plastic criteria: Ch 10, Sec 1, [3]	Control of stiffness and proportions: Ch 8, Sec 2 Ch 10, Sec 1, [3]	Plastic criteria: Ch 10, Sec 1, [3]	Control of stiffness and proportions: Ch 8, Sec 2 Ch 10, Sec 1, [3]	N/A	N/A

(1) Refer to Ch 10 for Other structures and to Ch 11 for Superstructure, deckhouses and hull outfitting

Table 3 : Acceptance criteria - FE analysis

Acceptance criteria	Cargo hold analysis		Fine mesh analysis
	Yield	Buckling	Yield
AC-S AC-SD	Permissible stress: Ch 7, Sec 2, [5]	Allowable buckling utilisation factor: Ch 8, Sec 1, [3]	Permissible Von Mises stress: Ch 7, Sec 3, [6] Screening criteria: Ch 7, Sec 3, [3.3]

5.3.4 Structural response analysis

In general, the following approaches are applied for determination of the structural response to the applied design load combinations.

a) Beam theory:

- Used for prescriptive requirements.

b) FE analysis:

- Coarse mesh for cargo hold model.
- Fine mesh for local models.
- Very fine mesh for fatigue assessment.

5.4 Acceptance criteria

5.4.1 General

The acceptance criteria are categorised into three acceptance criteria sets. These are explained below and shown in Table 2 and Table 3. The specific acceptance criteria set that is applied in the rule requirements is dependent on the probability level of the characteristic combined load.

The acceptance criteria set AC-S is applied for the static design load combinations, and for the sloshing design loads. The allowable stress for such loads is lower than that for an extreme load to take into account effects of:

- Repeated yield.
- Allowance for some dynamics.
- Margins for some selected limited operational mistakes.

The acceptance criteria set AC-SD is applied for the S+D design load combinations where considered loads are extreme loads with a low probability of occurrence.

The acceptance criteria set AC-I is typically applied for impact loads, such as bottom slamming and bow impact loads.

5.4.2 Acceptance criteria

The specific acceptance criteria applied in the working stress design requirements are given in the detailed Rule requirements in Pt 1, Ch 5 to Ch 8, Ch 10, Ch 11 and Pt 2, Ch 1 and Ch 2.

To provide a general informational summary overview of the acceptance criteria, refer to Table 2 and Table 3 below for the different design load scenarios covered by these Rules for the yield and buckling failure modes. For the yield criteria the permissible stress is proportional to the specified minimum yield stress of the material. For the buckling failure mode, the acceptance criteria are based on the control of stiffness and proportions as well as on the buckling utilisation factor.

5.5 Design verification

5.5.1 Design verification – hull girder ultimate strength

The requirements for the ultimate strength of the hull girder are based on a Partial Safety Factor (PSF) method. A safety factor is assigned to each of the basic variables, the still water bending moment, wave bending moment and ultimate capacity. The safety factors were determined using a structural reliability assessment approach, the long-term load history distribution of the wave bending moment was derived using ship motion analysis techniques suitable for determining extreme wave bending moments.

The purpose of the hull girder ultimate strength verification is to demonstrate that one of the most critical failure modes of a ship is controlled.

5.5.2 Design verification – global finite element analysis

The global finite element analysis is used to verify the scantlings given by the load-capacity based prescriptive requirements to better consider the complex interactions between the ship's structural components, complex local structural geometry, change in thicknesses and member section properties as well as the complex load regime with sufficient accuracy.

A linear elastic three dimensional finite element analysis of the cargo region (a FE model length of three holds is required) is carried out to assess and verify the structural response of the proposed hull girder and primary supporting members and assist in specifying the scantling requirements for the primary supporting members. The purpose with the finite element analysis is to verify that the stresses and buckling capability of the primary supporting members are within acceptable limits for the applied design loads.

5.5.3 Design verification – fatigue assessment

The fatigue assessment is required to verify that the fatigue life of critical structural details is adequate. A simplified fatigue requirement is applied to details such as end connections of longitudinal stiffeners using stress concentration factors (SCF) to account the actual detail geometry. A fatigue assessment procedure using finite element analysis for determining the actual hot spot stress of the geometric detail is applied to selected details. In both cases, the fatigue assessment method is based on the Palmgren-Miner linear damage model.

5.5.4 Relationship between prescriptive scantling requirements and FE analysis

The scantlings defined by the prescriptive requirements are not to be reduced by any form of alternative calculations such as FE analysis, unless explicitly stated.

SECTION 3
VERIFICATION OF COMPLIANCE

1 GENERAL

1.1 Newbuilding

1.1.1

For newbuildings, the plans and documents submitted for approval, as indicated in [2], are to comply with applicable requirements in these Rules, taking account of the relevant criteria, such as additional service features and classification notations assigned to the ship or the ship length.

1.1.2

When a ship is surveyed by the Society during construction, the Society:

- Approves the plans and documentation submitted as required by the Rules.
- Proceeds with the appraisal of the design of materials and equipment used in the construction of the ship and their inspection at works.
- Carries out surveys or obtains appropriate evidence to satisfy itself that the scantlings and construction meet the Rule requirements in relation to the approved drawings.
- Attends tests and trials provided for in the Rules.
- Assigns the classification character of the Society's notation.

1.1.3

The Society defines in specific Rules which materials and equipment used for the construction of ships built under survey are, as a rule, subject to appraisal of their design and to inspection at works, and according to which particulars.

1.1.4

As part of his/her interventions during ship's construction, the surveyor:

- Conducts an overall examination of the parts of the ship covered by the Rules.
- Examines the construction methods and procedures when required by the Rules.
- Checks selected items covered by the Rule requirements.
- Attends tests and trials where applicable and deemed necessary.

1.1.5

Through all stages of ship construction, it is the builder's responsibility to promptly inform the Society of modifications or departures from approved plans. The builder is to ensure that any deviations from the requirements of the Rules or approved plans are, in any case, accepted by the Society.

1.2 Ships in service

1.2.1

For ships in service, the requirements in Ch 13 are to be complied with.

2 DOCUMENTS TO BE SUBMITTED

2.1 Documentation and data requirements

2.1.1 Loading information

Loading information containing sufficient information to enable the master of the ship to maintain the ship within the stipulated operational limitations is to be provided on board the ship. The loading information is to include an approved loading manual and loading instrument complying with the requirements given in Ch 1, Sec 5.

2.1.2 Calculation data and results

Where calculations have been carried out in accordance with the procedures given in the Rules, one copy of the following is to be submitted for information as applicable:

a) Reference to the calculation procedure and technical program used.

b) A description of the structural modelling.

c) A summary of the analysed parameter including properties and boundary conditions for direct analysis, when applicable.

d) Details of the loading conditions and the means of applying loads for direct analysis, when applicable.

e) A comprehensive summary of calculation results.

f) Sample calculations where appropriate.

The responsibility for error free specification and input of program data and the subsequent correct transposal of output resides with the designer.

Reference is made to Ch 7, Sec 1, [4.1] for required reporting of finite element analysis.

2.2 Submission of plans and supporting calculations

2.2.1 Plans and supporting calculations are to be submitted for approval

For the application of these Rules, the plans and supporting calculations to be submitted to the Society for approval are listed in Table 1.

Plans are to be submitted electronically or physically. When physically submitted plans are to be submitted in triplicate, with one copy necessary for supporting documents and calculations. In addition, the Society may request the submission of information, other plans and documents deemed necessary for the review of the design.

Structural plans are to show scantling, details of connection of the various parts and are to specify the design materials including, in general, their grades, manufacturing processes, welding procedures and heat treatments, and are to include information related to the renewal thickness as specified in Ch 13.

For welding requirements, see Ch 12, Sec 2 and Ch 12, Sec 3.

In case there are deviations from the design basis, then these are to be documented and submitted to the Society.

2.2.2 Plans to be submitted for information

In addition to those in [2.2.1], the following plans are to be submitted to the Society for information:

a) General arrangement.

b) Capacity plan, indicating the volume and position of the centre of gravity of all compartments and tanks.

c) Lines plan, when deemed necessary by the Society.

d) Hydrostatic curves.

e) Lightweight distribution.

f) Docking plan.

g) Arrangement of lifting appliances

Table 1 : Plans and supporting calculation to be submitted for approval

Plan or supporting calculation	Containing also information on
Midship section Transverse sections Shell expansion Decks and profiles Double bottom Pillar arrangements Framing plan Deep tank and ballast tank bulkheads, Wash bulkheads Standard construction details	Class characteristics Ship's main dimensions Minimum ballast draught Frame spacing Maximum service speed Density of cargoes Design loads on decks and double bottom Steel grades Corrosion protection Openings in decks and shell and relevant compensations Boundaries of flat areas in bottom and sides Details of structural reinforcements and/or discontinuities Bilge keel with details of connections to hull structures Welding
Watertight subdivision bulkheads Watertight tunnels	Openings and their closing appliances, if any
Fore part structure	-
Aft part structure	-
Machinery space structures Foundations of propulsion machinery and boilers	Type, power and RPM of propulsion machinery Mass and centre of gravity of machinery and boilers
Superstructures and deckhouses Machinery space casing	Extension and mechanical properties of the aluminium alloy used (where applicable)
Hatch covers and hatch coamings	Design loads on hatch covers Sealing and securing arrangements, type and position of locking bolts Distance of hatch covers from the summer load waterline and from the fore end
Transverse thruster, if any, general arrangement, tunnel structure, connections of thruster with tunnel and hull structures	-
Bulwarks and freeing ports	Arrangement and dimensions of bulwarks and freeing ports on the freeboard deck and superstructure deck

Plan or supporting calculation	Containing also information on
Windows and side scuttles, arrangements and details	-
Scuppers and sanitary discharges	-
Mooring and towing arrangement	-
Supporting structure and foundations for shipboard fittings associated with mooring and towing operations	Design loads and directions of load actions, rated pull and holding load for mooring winches Reaction forces Details of connection of the foundations to the deck, including specifications for holding down bolts for mooring winches Material specifications and welding
Supporting structure and foundations for windlasses and chain stoppers	Design loads and directions of load actions Reaction forces Details of connection of the foundations to the deck, including specifications for holding down bolts for windlasses Material specifications and welding
Stern frame or sternpost, sterntube Propeller shaft boss and brackets (1)	-
Plan of watertight doors and scheme of relevant closing devices	Closing devices Electrical diagrams of power control and position indication circuits
Plan of weathertight or outer doors and hatchways	-
Supporting structure for lifting appliances	Design loads (forces and moments) SWL and self weight of lifting appliances Maximum sea state in offshore operation, if any Connections to the hull structures
Supporting structure for life saving appliances	Design loads (forces and moments) SWL and self weight of lifting appliances Connections to the hull structure
Sea chests, stabiliser recesses, etc	-
Plan of manholes	-
Plan of access to and escape from spaces	-
Plan of ventilation including ventilators and tank vents	Use of spaces and location and height of air vent outlets of various compartments
Plan of tank testing	Testing procedures for the various compartments Height of pipes for testing
Equipment number calculation	Geometrical elements for calculation List of equipment Construction and breaking load of steel wires Material, construction, breaking load and relevant elongation of synthetic ropes
Anchoring arrangement	-
Hawse pipes	-
Loading manual and/or trim and stability booklet	-

(1) Where other steering or propulsion systems are adopted (e.g. steering nozzles or azimuth propulsion systems), the plans showing the relevant arrangement and structural scantlings are to be submitted.

2.2.3 Plans and instruments to be supplied onboard the ship

As a minimum, the following plans and instrument are to be supplied onboard:

a) One copy of the following plans indicating the newbuilding and renewal thickness for each structural item is to be supplied onboard the ship: plans of midship sections, construction profiles, shell expansion, transverse bulkheads, aft and fore part structures, machinery space structures.

   One copy of the following plans indicating the newbuilding thickness for each structural item is to be supplied onboard the ship: plans of superstructures, deckhouses and casing.

b) One copy of the final approved loading manual, see [2.1.1].

c) One copy of the final approved loading instrument, see [2.1.1].

d) Welding.

e) Details of the extent and location of higher tensile steel together with details of the specification and mechanical properties, and any recommendations for welding, working and treatment of these steels.

f) Details and information on use of special materials, such as an aluminium alloy, used in the hull construction.

g) Towing and mooring arrangements plan, see Ch 11, Sec 3.

h) Structural access manual.

i) Structural details for which post weld treatment methods are applied, showing the description of the details and their locations.

Other plans or instrument may be required by the Society.

3 SCOPE OF APPROVAL

3.1 General

3.1.1

The attention of owners, designers and builders is directed to the regulations of international, national, canal, and other authorities dealing with those requirements which may affect structural aspects, in addition to or in excess of the classification requirements.

3.1.2

The documentation, plans and data requirements specified in [2] are to be submitted. The Society is to review such documentation to verify compliance with the requirements.

3.1.3

An appropriate term to indicate that the plans, reports or documents have been reviewed for compliance with these Rules is to be used according to the procedures of the Society.

3.2 Requirements of international and national regulations

3.2.1 Responsibility

It is the responsibility of the designer to ensure that the design complies with the national and international regulations applicable to the ship.

The Society is not responsible for assessing compliance with international and national regulations as part of the general classification process. However, the Society may enter into an agreement with the flag administration of the ship under which they are explicitly instructed to review and approve a ship design for compliance with specified regulations.

4 WORKMANSHIP

4.1 Requirements to be complied with by the manufacturer

4.1.1

The manufacturing plant is to be provided with suitable equipment and facilities to enable proper handling of the materials, manufacturing processes and structural components. The manufacturing plant is to have at its disposal sufficiently qualified personnel. The Society is to be advised of the names and areas of responsibility of the supervisory and control personnel in charge of the project.

4.2 Quality control

4.2.1

As far as required and expedient, the manufacturer's personnel has to examine all structural components both during manufacture and on completion, to verify that they are complete, that the dimensions are correct and that workmanship is satisfactory and meets the standard of good shipbuilding practice.

Upon inspection and corrections by the manufacturing plant, the structural components are to be shown to the surveyor of the Society for inspection, in suitable sections, normally unpainted condition and enabling proper access for inspection.

The Surveyor may reject components that have not been adequately checked by the plant and may demand their re-submission upon successful completion of such checks and corrections by the plant.

5 STRUCTURAL DETAILS

5.1 Details in manufacturing documents

5.1.1

Significant details concerning quality and functional ability of the component concerned are to be entered in the manufacturing documents (e.g. workshop drawing). This includes not only scantlings but, where relevant, such items as surface conditions (e.g. finishing of flame cut edges and weld seams), and special methods of manufacture involved as well as inspection and acceptance requirements and where relevant permissible tolerances. When a standard is used (works or national standard), it is to be submitted to the Society. For weld joint details, see Ch 12, Sec 2.

If, due to missing or insufficient details in the manufacturing documents, the quality or functional ability of the component is doubtful, the Society may require appropriate improvements to be submitted by the manufacturer. This includes the provision of supplementary or additional parts (for example, reinforcements) even if these were not required at the time of plan approval.

6 EQUIVALENCE PROCEDURES

6.1 Rule applications

6.1.1

These Rules apply to ships of normal form, proportions, speed and structural arrangements. Relevant design parameters defining the assumptions made are given in Ch 1, Sec 2, [3].

6.1.2

Special consideration is to be given to the application of the Rules incorporating design parameters which are outside the design basis as specified in Ch 1, Sec 2, [3], for example, increased fatigue life.

6.2 Novel designs

6.2.1

Ships of novel design, i.e. those of unusual form, proportions, speed and structural arrangements outside those specified in Ch 1, Sec 2, [3.2], are specially considered according to the contents of [6.2.2] to [6.2.4].

6.2.2

Information is to be submitted to the Society to demonstrate that the structural safety of the novel design is at least equivalent to that intended by the Rules.

6.2.3

In such cases, the Society is to be contacted at an early stage in the design process to establish the applicability of the Rules and additional information required for submission.

6.2.4

Dependent on the nature of the deviation, a systematic review may be required to document equivalence with the Rules.

6.3 Alternative calculation methods

6.3.1

Where indicated in specific sections of the Rules, alternative calculation methods to those shown in the Rules may be accepted provided it is demonstrated that the scantling and arrangements are of at least equivalent strength to those derived using the Rules.

SECTION 4
SYMBOLS AND DEFINITIONS

1 PRIMARY SYMBOLS AND UNITS

1.1 General

1.1.1

Unless otherwise specified, the general symbols and their units used in these Rules are those defined in Table 1.

Table 1 : Primary symbols

Symbol	Meaning	Units
A	Area	m^2
	Sectional area of stiffeners and primary members	cm^2
C	Coefficient	-
F	Force and concentrated loads	kN
I	Hull girder inertia	m^4
	Inertia of stiffeners and primary members	cm^4
M	Bending moment	kNm
M	Mass	t
P	Pressure	kN/m^2
Q	Shear force	kN
T	Draught of ship, see [3.1.5]	m
Z	Hull girder section modulus	m^3
	Section modulus of stiffeners and primary supporting members	cm^3
a_i	Acceleration for the effect 'i'	m/s^2
b	Width of attached plating	mm
	Width of face plate of stiffeners and primary supporting members	mm
g	Gravity acceleration, taken equal to 9.81 m/s^2	m/s^2
h	Height	m
	Web height of stiffeners and primary supporting members	mm
ℓ	Length/span of stiffeners and primary supporting members	m
n	Number of items	-
r	Radius	mm
	Radius of curvature of plating or bilge radius	mm
t	Thickness	mm
x	X coordinate along longitudinal axis, see [3.6]	m
y	Y coordinate along transverse axis, see [3.6]	m

Symbol	Meaning	Units
z	Z coordinate along vertical axis, see [3.6]	m
η	Permissible utilisation factor (usage factor)	-
γ	Safety factor	-
δ	Deflection/displacement	mm
θ	Angle	deg
ρ	Density of seawater, taken equal to 1.025 t/m^3	t/m^3
σ	Normal stress	N/mm^2
τ	Shear stress	N/mm^2

2 SYMBOLS

2.1 Ship's main data

2.1.1

Unless otherwise specified, symbols regarding ship's main data and their units used in these Rules are those defined in Table 2.

Table 2 : Ship's main data

Symbol	Meaning	Units
L	Rule length	m
L_{LL}	Freeboard length	m
L_{PP}	Length between perpendiculars	m
L_0	Rule length, L, but not to be taken less than 110 m	m
L_1	Rule length, L, but need not be taken greater than 250 m	m
L_2	Rule length, L, but need not be taken greater than 300 m	m
B	Moulded breadth of ship	m
D	Moulded depth of ship	m
T	Moulded draught	m
T_{SC}	Scantling draught	m
T_{BAL}	Ballast draught (minimum midship)	m
T_{BAL-H}	Heavy ballast draught	m
T_{BAL-E}	Emergency ballast draught or gale ballast draught	m
T_{LC}	Midship draught at considered loading condition	m
T_{F-f}, T_{F-e}	Minimum draught at forward perpendicular for bottom slamming, with respectively all ballast tanks full or with any tank empty in bottom slamming area	m
Δ	Moulded displacement at draught T_{SC}	t
C_B	Block coefficient at draught T_{SC}	-
V	Maximum service speed	knot
x, y, z	X,Y, Z coordinates of the calculation point with respect to the reference coordinate system	m

2.2 Materials

2.2.1

Unless otherwise specified, symbols regarding materials and their units used in these Rules are those defined in Table 3.

Table 3 : Materials

Symbol	Meaning	Units
E	Young's modulus, see Ch 3, Sec 1, [2]	N/mm^2
G	Shear modulus, $G = \dfrac{E}{2(1+\nu)}$	N/mm^2
R_{eH}	Specified minimum yield stress, see Ch 3, Sec 1, [2]	N/mm^2
τ_{eH}	Specified shear yield stress, $\tau_{eH} = \dfrac{R_{eH}}{\sqrt{3}}$	N/mm^2
ν	Poisson's ratio, see Ch 3, Sec 1, [2]	-
k	Material factor, see Ch 3, Sec 1, [2]	-
R_m	Specified minimum tensile strength, see Ch 3, Sec 1, [2]	N/mm^2
R_Y	Nominal yield stress, taken equal to 235/k	N/mm^2

2.3 Loads

2.3.1

Unless otherwise specified, symbols regarding loads and their units used in these Rules are those defined in Table 4.

Table 4 : Loads

Symbol	Meaning	Units
C_w	Wave coefficient	-
T_θ	Roll period	s
θ	Roll angle	deg
T_φ	Pitch period	s
φ	Pitch angle	deg
a_o	Common acceleration parameter	-
a_z	Vertical acceleration	m/s^2
a_y	Transverse acceleration	m/s^2
a_x	Longitudinal acceleration	m/s^2
f_p	Probability factor	-
k_r	Roll amplitude of gyration	m
GM	Metacentric height	m
λ	Wave length	m
S	Static load case	-
S+D	Dynamic load case	-
P_{ex}	Total sea pressure, see Ch 4, Sec 5, [1.1]	kN/m^2

Symbol	Meaning	Units
P_{in}	Total internal pressure due to liquid, see Ch 4, Sec 6, [1], or due to dry bulk cargo, see Ch 4, Sec 6, [2.4.1]	kN/m^2
P_s	Static sea pressure	kN/m^2
P_{ls}	Static tank pressure	kN/m^2
P_w	Dynamic wave pressure	kN/m^2
P_{ld}	Dynamic tank pressure	kN/m^2
P_D	Green sea deck pressure	kN/m^2
$P_{slh\text{-}j}$	Sloshing pressure, *j*=direction	kN/m^2
P_{dl}	Total pressure due to distributed load on deck or platform, see Ch 4, Sec 5, [2.3] or Ch 4, Sec 6, [5.2]	kN/m^2
P_{SL}	Bottom slamming pressure	kN/m^2
P_{FB}	Bow impact pressure	kN/m^2
P_{fs}	Static pressure in flooded conditions	kN/m^2
P_{fd}	Dynamic pressure in flooded conditions	kN/m^2
P_{ST}	Tank testing pressure (static)	kN/m^2
F_U	Total force due to concentrated load on deck or platform, see Ch 4, Sec 5, [2.3] or Ch 4, Sec 6, [5.3]	kN
$M_{sw\text{-}j}$	Vertical still water bending moment, *j* = *h*, *s*, *p* (hog, sag, harbour)	kNm
Q_{sw}	Vertical still water shear force	kN
$M_{wv\text{-}j}$	Vertical wave bending moment, *j* = *h*, *s* (hog, sag)	kNm
Q_{wv}	Vertical wave shear force	kN
M_{wt}	Torsional wave moment	kNm
M_{wh}	Horizontal wave bending moment	kNm

2.4 Scantlings

2.4.1

Unless otherwise specified, symbols regarding scantlings and their units used in these Rules are those defined in Table 5.

Table 5 : Scantlings

Symbol	Meaning	Units
$I_{y\text{-}n50}$	Net vertical moment of inertia of hull girder	m^4
$I_{z\text{-}n50}$	Net horizontal moment of inertia of hull girder	m^4
$Z_{D\text{-}n50}$, $Z_{B\text{-}n50}$	Net vertical hull girder section moduli, at deck and bottom respectively	m^3
z_n	Vertical distance from BL to horizontal neutral axis	m
a	Length of EPP, as defined in Ch 3, Sec 7, [2.1.1]	mm
b	Breadth of EPP, as defined in Ch 3, Sec 7, [2.1.1]	mm
s	Stiffener spacing (see Ch 3, Sec 7, [1.2.1])	mm
S	Primary supporting member spacing (see Ch 3, Sec 7, [1.2.2])	m
ℓ	Span of stiffeners or primary supporting member (see Ch 3, Sec 7, [1])	m
ℓ_b	Bracket arm length	m

Symbol	Meaning	Units
t	Net thickness with full corrosion reduction	mm
t_{n50}	Net thickness with half corrosion reduction	mm
t_c	Corrosion addition	mm
t_{gr}	Gross thickness	mm
t_{as_built}	As built thickness	mm
t_{gr_off}	Gross thickness offered	mm
t_{gr_req}	Gross thickness required	mm
t_{off}	Net thickness offered	mm
t_{req}	Net thickness required	mm
t_{vol_add}	Thickness for voluntary addition	mm
t_{res}	Reserve thickness	mm
t_{c1}, t_{c2}	Corrosion addition on each side of structural member	mm
h_w	Web height of stiffener or primary supporting member	mm
t_w	Web thickness of stiffener or primary supporting member	mm
b_f	Face plate width stiffener or primary supporting member	mm
h_{stf}	Height of stiffener	mm
t_f	Face plate/flange thickness of stiffener or primary supporting member	mm
t_p	Thickness of the plating attached to a stiffener or a primary supporting member	mm
d_e	Distance from the upper edge of the web to the top of the flange for *L3* profiles	mm
b_{eff}	Effective breadth of attached plating, in bending, for yield and fatigue	mm
A_{eff} or $A_{eff\text{-}n50}$	Net sectional area of stiffeners or primary supporting members, with attached plating (of width s)	cm^2
A_{shr} or $A_{shr\text{-}n50}$	Net shear sectional area of stiffeners or primary supporting members	cm^2
I_p	Net polar moment of inertia of stiffener about its connection to plating	cm^4
I	Net moment of inertia of the stiffener, with attached shell plating, about its neutral axis parallel to the plating	cm^4
Z or Z_{n50}	Net section modulus of a stiffener or primary supporting member with attached plating (of breadth b_{eff})	cm^3

3 DEFINITIONS

3.1 Principal Particulars

3.1.1 *L*, Rule length

The Rule length *L* is the distance, in m, measured on the waterline at the scantling draught T_{SC} from the forward side of the stem to the centre of the rudder stock. *L* is to be not less than 96% and need not exceed 97% of the extreme length on the waterline at the scantling draught T_{SC}.

In ships without rudder stock (e.g. ships fitted with azimuth thrusters), the Rule length *L* is to be taken equal to 97% of the extreme length on the waterline at the scantling draught T_{SC}.

In ships with unusual stem or stern arrangements, the Rule length is considered on a case-by-case basis.

3.1.2 L_{LL}, freeboard length

The freeboard length L_{LL}, in m, is to be taken as 96% of the total length on a waterline at 85% of the least moulded depth measured from the top of the keel, or as the length from the fore side of the stem to the axis of the rudder stock on that waterline, if that be greater.

For ships without a rudder stock, the length L_{LL} is to be taken as 96% of the waterline at 85% of the least moulded depth.

Where the stem contour is concave above the waterline at 85% of the least moulded depth, both the forward end of the extreme length and the forward side of the stem are to be taken at the vertical projection to that waterline of the aftermost point of the stem contour (above that waterline), see Figure 1.

Figure 1 : Concave stem contour

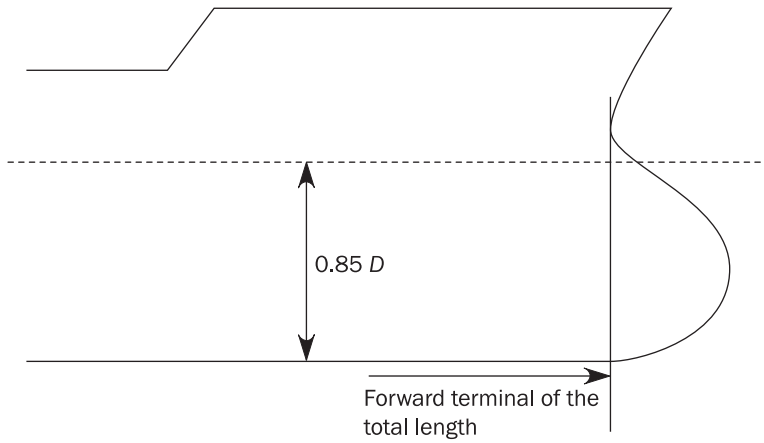

3.1.3 Moulded breadth

The moulded breadth B is the greatest moulded breadth, in m, measured amidships at the scantling draught, T_{SC}.

3.1.4 Moulded depth

D, the moulded depth, is the vertical distance, in m, amidships, from the moulded baseline to the moulded deck line of the uppermost continuous deck measured at deck at side. On ships with a rounded gunwale, D is to be measured to the continuation of the moulded deck line.

3.1.5 Draughts

T, the draught in m, is the summer load line draught for the ship in operation, measured from the moulded baseline at midship. Note this may be less than the maximum permissible summer load waterline draught.

T_{SC} is the scantling draught, in m, at which the strength requirements for the scantlings of the ship are met and represents the full load condition. The scantling draught T_{SC} is to be not less than that corresponding to the assigned freeboard. The draught of ships to which timber freeboards are assigned corresponds to the loading condition of timber, and the requirements of the Society are to be applied to this draught.

T_{BAL} is the minimum design normal ballast draught amidships, in m, at which the strength requirements for the scantlings of the ship are met. This normal ballast draught is the minimum draught of ballast conditions including ballast water exchange operation, if any, for any ballast conditions in the loading manual including both departure and arrival conditions.

$T_{BAL\text{-}H}$ is the minimum design heavy ballast draught, in m, at which the strength requirements for the scantlings of the ship are met. This heavy ballast draught is to be considered for ships having heavy ballast condition.

3.1.6 Moulded displacement

Moulded displacement, in t, corresponds to the underwater volume of the ship, at a draught, in seawater with a density of 1.025 t/m^3.

3.1.7 Maximum service speed

V, the maximum ahead service speed, in knots, means the greatest speed which the ship is designed to maintain in service at her deepest seagoing draught at the maximum propeller RPM and corresponding engine MCR (Maximum Continuous Rating).

3.1.8 Block coefficient

C_B, the block coefficient at the draught, T_{SC} is defined in the following equation:

$$C_B = \frac{\Delta}{1.025\ L\ B\ T_{SC}}$$

where:

Δ : Moulded displacement of the ship at draught T_{SC}.

3.1.9 Lightweight

The lightweight is the ship displacement, in t, complete in all respects, but without cargo, consumable, stores, passengers and crew and their effects, and without any liquids on board except that machinery and piping fluids, such as lubricants and hydraulics, are at operating levels.

3.1.10 Deadweight

The deadweight DWT is the difference, in t, between the displacement, at the summer draught in seawater of density ρ = 1.025 t/m^3, and the lightweight.

3.1.11 Fore end

The fore end (FE) of the rule length *L*, see Figure 2, is the perpendicular to the scantling draught waterline at the forward side of the stem.

Figure 2 : Ends and midship

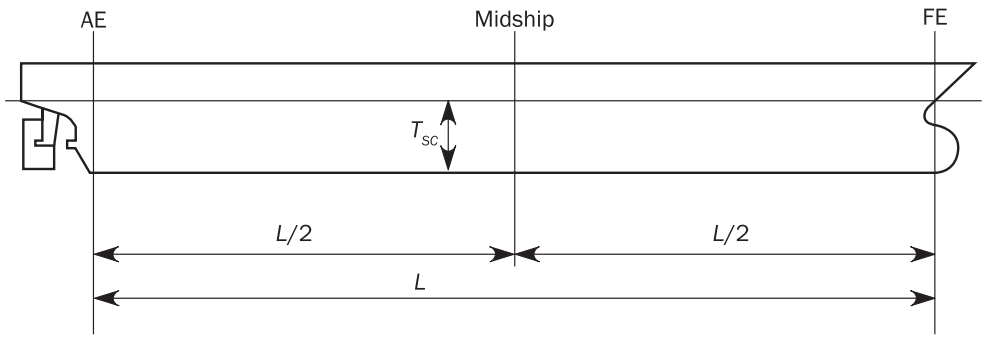

3.1.12 Aft end

The aft end (AE) of the rule length *L*, see Figure 2, is the perpendicular to the scantling draught waterline at a distance *L* aft of the fore end.

3.1.13 Midship

The midship is the perpendicular to the scantling draught waterline at a distance 0.5 *L* aft of the fore end.

3.1.14 Midship part

The midship part of a ship is the part extending 0.4 *L* amidships, unless otherwise specified.

3.1.15 Forward freeboard perpendicular

The forward freeboard perpendicular, FP_{LL}, is to be taken at the forward end of the length L_{LL} and is to coincide with the foreside of the stem on the waterline on which the length L_{LL} is measured.

3.1.16 After freeboard perpendicular

The after freeboard perpendicular, AP_{LL}, is to be taken at the aft end of the length L_{LL}.

3.2 Position 1 and Position 2

3.2.1 Position 1

Position 1 includes:

- Exposed freeboard and raised quarter decks.
- Exposed superstructure decks situated forward of 0.25 L_{LL} from FP_{LL}.

3.2.2 Position 2

Position 2 includes:

- Exposed superstructure decks situated aft of 0.25 L_{LL} from FP_{LL} and located at least one standard height of superstructure above the freeboard deck.
- Exposed superstructure decks situated forward of 0.25 L_{LL} from FP_{LL} and located at least two standard heights of superstructure above the freeboard deck.

3.3 Standard height of superstructure

3.3.1

The standard height of superstructure is defined in Table 6.

Table 6 : Standard height of superstructure

Freeboard length L_{LL}, in m	Standard height h_S, in m	
	Raised quarter deck	All other superstructures
$90 < L_{LL} \leq 125$	$0.3 + 0.012\ L_{LL}$	$1.05 + 0.01\ L_{LL}$
$L_{LL} > 125$	1.80	2.30

3.3.2

A tier is defined as a measure of the extent of a deckhouse. A deckhouse tier consists of a deck and external bulkheads. In general, the first tier is the tier situated on the freeboard deck.

3.4 Type A and Type B freeboard ships

3.4.1 Type A ship

Type A ship is one which:

- Is designed to carry only liquid cargoes in bulk.
- Has a high integrity of the exposed deck with only small access openings to cargo compartments, closed by watertight gasketed covers of steel or equivalent material.
- Has low permeability of loaded cargo compartments.

Type A ship is to be assigned a freeboard following the requirements specified in the ICLL.

3.4.2 Type B ship

All ships which do not come within the provisions regarding Type A ships stated in [3.4.1] are to be considered as Type B ships.

Type B ship is to be assigned a freeboard following the requirements specified in ICLL.

3.4.3 Type B-60 ship

Type B-60 ship is any Type B ship of over 100 m in length which, according to applicable requirements of ICLL is assigned with a value of tabular freeboard which can be reduced up to 60% of the difference between the 'B' and 'A' tabular values for the appropriate ship lengths.

3.4.4 Type B-100 ship

Type B-100 ship is any Type B ship of over 100 m in length which, according to applicable requirements of ICLL is assigned with a value of tabular freeboard which can be reduced up to 100% of the difference between the 'B' and 'A' tabular values for the appropriate ship lengths.

3.5 Operation definition

3.5.1 Multiport

Multiport corresponds to short voyage with loading and unloading in multiple ports.

3.5.2 Sheltered water

Sheltered waters are generally calm stretches of water when the wind force does not exceed 6 Beaufort scale, i.e. harbours, estuaries, roadsteads, bays, lagoons.

3.6 Reference coordinate system

3.6.1

The ship's geometry, motions, accelerations and loads are defined with respect to the following right-hand coordinate system, see Figure 3:

Origin : At the intersection among the longitudinal plane of symmetry of ship, the aft end of *L* and the baseline.

X axis : Longitudinal axis, positive forwards.

Y axis : Transverse axis, positive towards portside.

Z axis : Vertical axis, positive upwards.

Figure 3 : Reference coordinate system

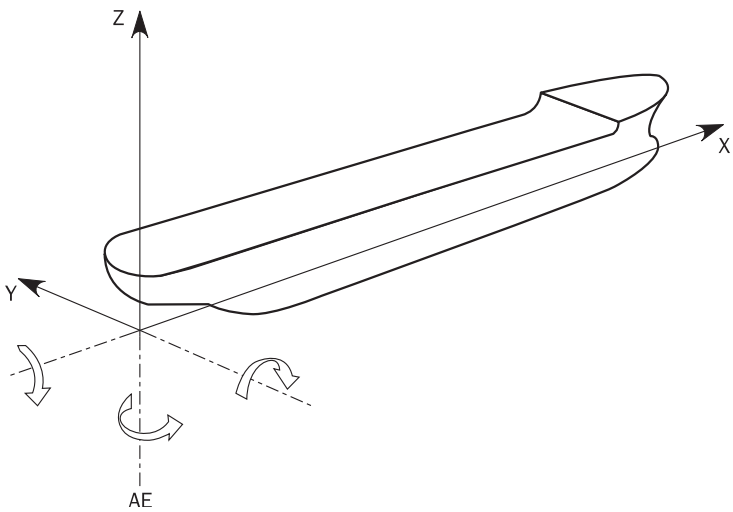

3.7 Naming convention

3.7.1 Structural nomenclature

Figure 4 to Figure 8 show the common structural nomenclature used within these Rules.

Figure 4 : Corrugated transverse bulkhead of double hull tanker

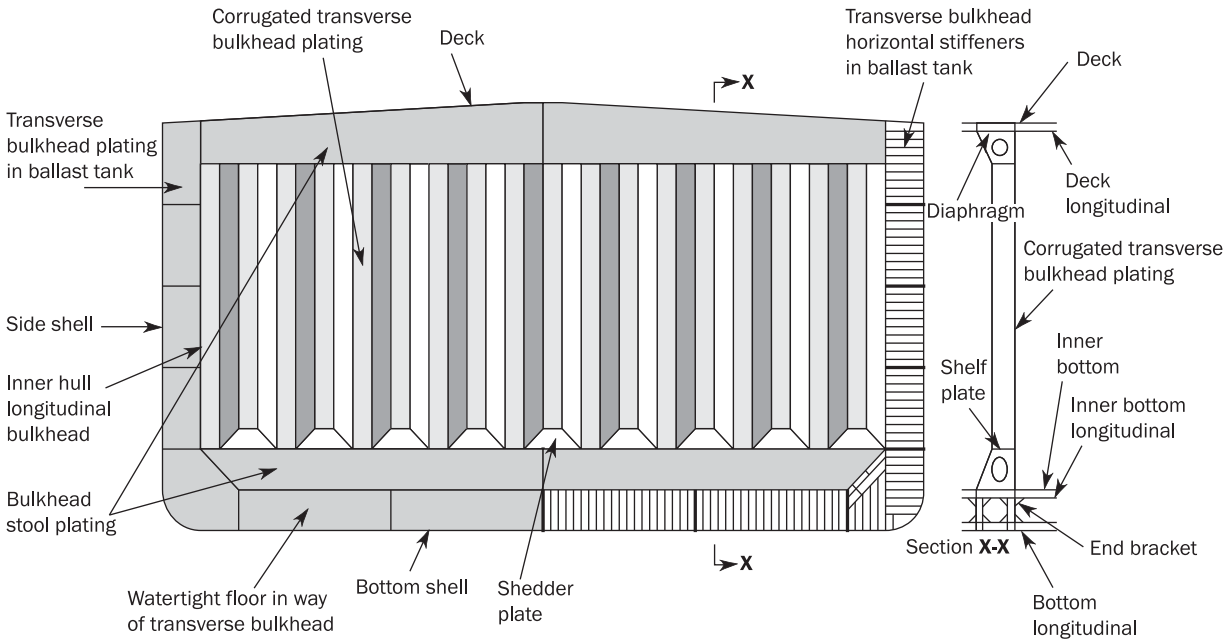

Figure 5 : Transverse bulkhead of double hull tanker

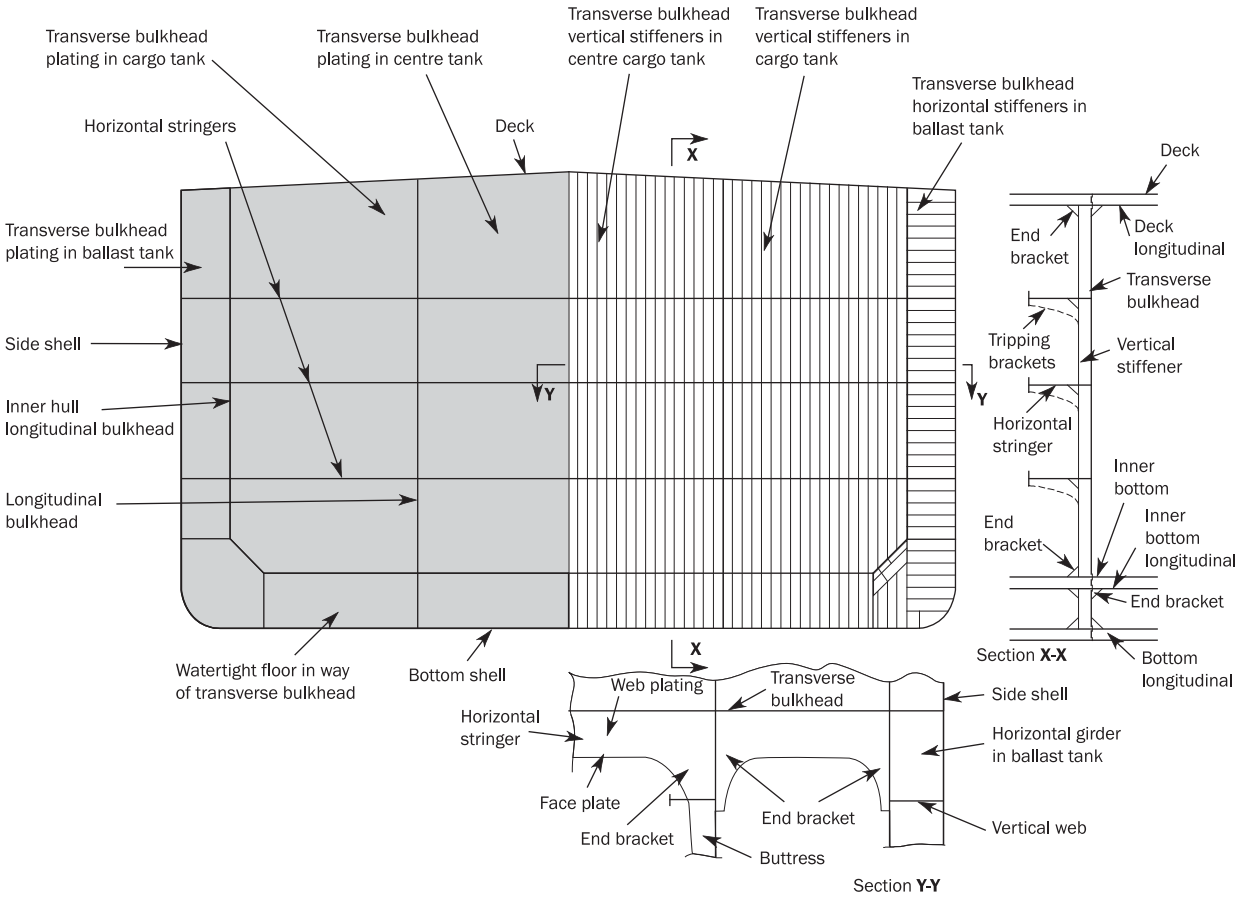

Figure 6 : Mid cargo hold transverse section of double hull tanker

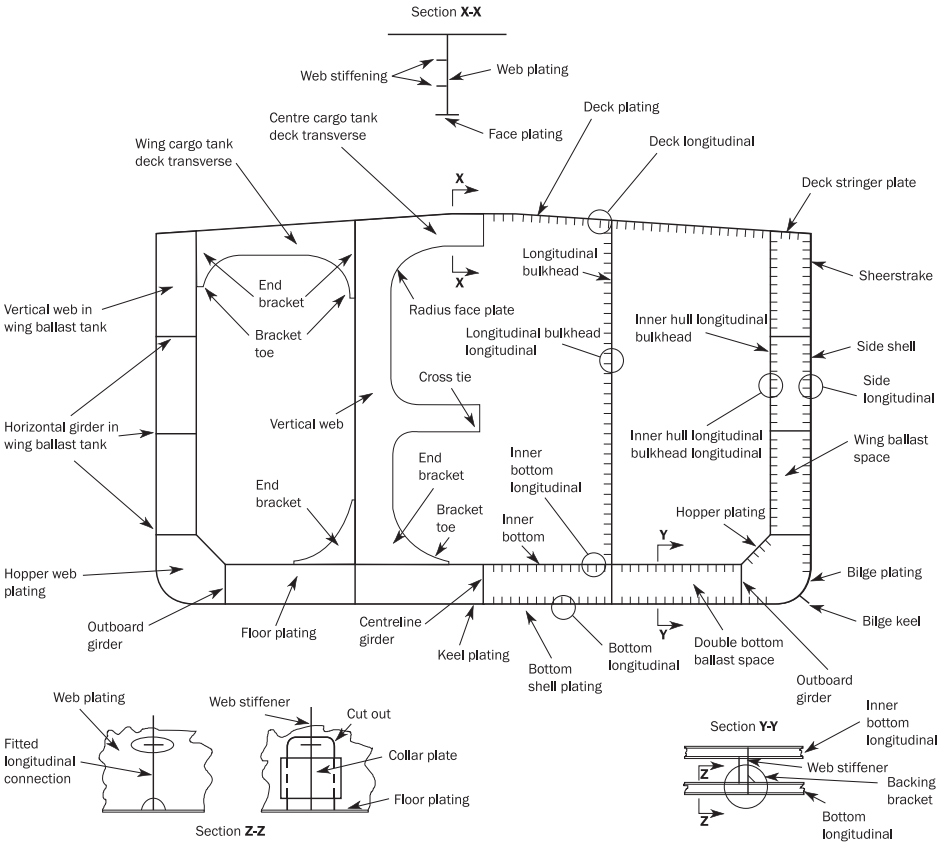

Figure 7 : Mid cargo hold transverse section of single side bulk carrier

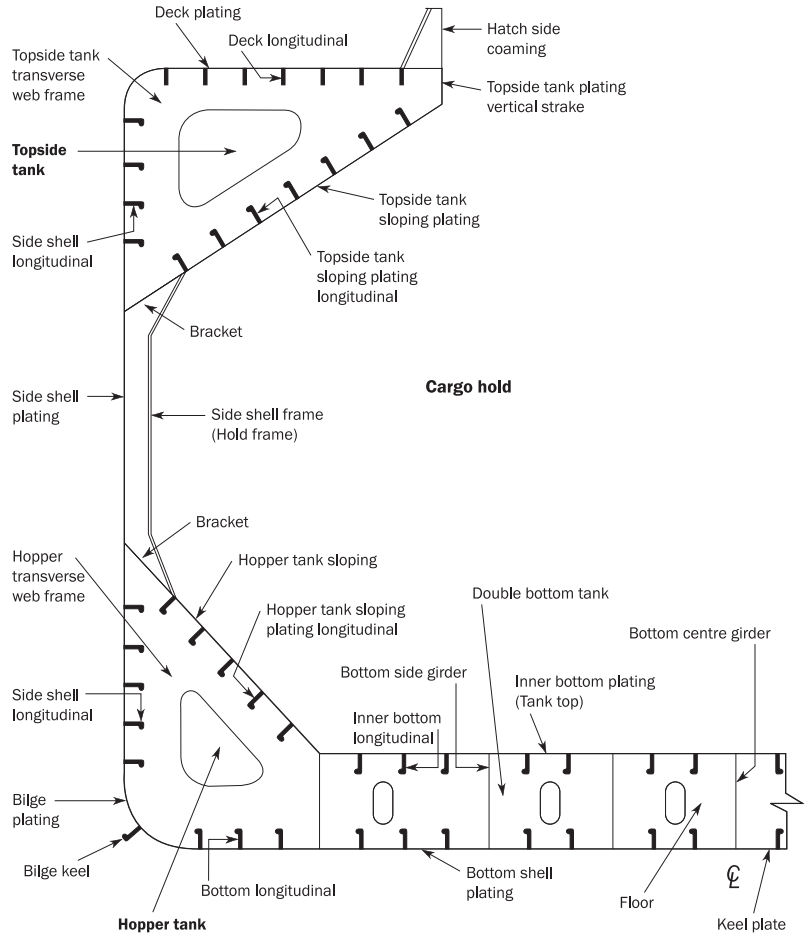

Figure 8 : Transverse bulkhead of bulk carrier

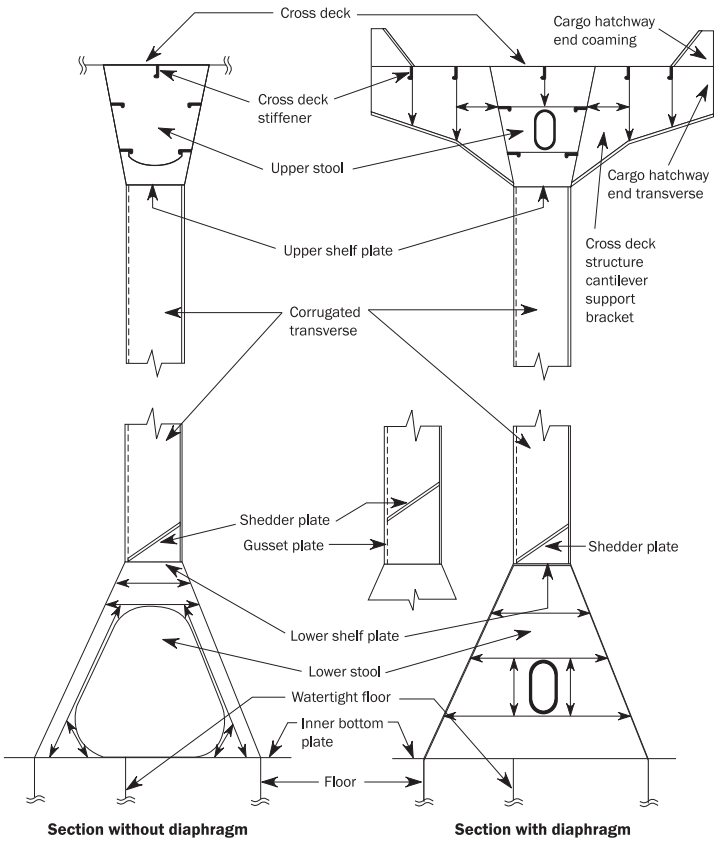

3.8 Glossary

3.8.1 Definitions of terms

Table 7 : Definition of terms

Terms	Definition
Accommodation deck	A deck used primarily for the accommodation of the crew.
Accommodation ladder	A portable set of steps on a ship's side for people boarding from small boats or from a pier.
Aft peak	The area aft of the aft peak bulkhead.
Aft peak bulkhead	The first main transverse watertight bulkhead forward of the stern.
Aft peak tank	The compartment in the narrow part of the stern aft of the aft peak bulkhead.
Anchor	A device which is attached to anchor chain at one end and lowered into the sea bed to hold a ship in position; it is designed to grip the bottom when it is dragged by the ship trying to float away under the influence of wind and current, usually made of heavy casting or casting.
Ballast tank	A compartment used for the storage of water ballast.
Bay	The area between adjacent transverse frames or transverse bulkheads.
Bilge hopper tank	The tank used for ballast or for stability when carrying certain cargoes in bulk carriers.
Bilge keel	A piece of plate set perpendicular to a ship's shell along the bilges to reduce the rolling motion.

Terms	Definition
Bilge plating	The bilge plating is the curved plating between the bottom shell and side shell. It is to be taken as follows: Within the cylindrical part of the ship: From the start of the curvature at the lower turn of bilge on the bottom to the end of the curvature at the upper turn of the bilge, Outside the cylindrical part of the ship: From the start of the curvature at the lower turn of the bilge on the bottom to the lesser of: • A point on the side shell located 0.2*D* above the baseline/local centreline elevation. • The end of the curvature at the upper turn of the bilge.
Bilge strake	The lower strake of bilge plating.
Boss	The boss of the propeller is the central part to which propeller blades are attached and through which the shaft end passes.
Bottom shell	The shell envelope plating forming the predominantly flat bottom portion of the shell envelope including the keel plate.
Bow	The structural arrangement and form of the forward end of the ship.
Bower anchor	An anchor carried at the bow of the ship.
Bracket	An extra structural component used to increase the strength of a joint between two structural members.
Bracket toe	The narrow end of a tapered bracket.
Breakwater	Inclined and stiffened plate structure on a weather deck to break and deflect the flow of water coming over the bow.
Breast hook	A triangular plate bracket joining port and starboard side structural members at the stem.
Bridge	An elevated superstructure having a clear view forward and at each side, and from which a ship is steered.
Buckling panel	Elementary plate panel considered for the buckling analysis.
Builder	The party contracted by the owner to build a ship in compliance with the specifications including Rules.
Bulb profile	A stiffener utilising an increase in steel mass on the outer end of the web instead of a separate flange.
Bulkhead	A structural partition wall sub-dividing the interior of the ship into compartments.
Bulkhead deck	The uppermost continuous deck to which transverse watertight bulkheads and shell are carried.
Bulkhead stool	The lower or upper base of a corrugated bulkhead.
Bulkhead structure	The transverse or longitudinal bulkhead plating with stiffeners and girders.
Bulwark	The vertical plating immediately above the upper edge of the ship's side surrounding the exposed deck(s).
Bunker	A compartment for the storage of fuel oil used by the ship's machinery.
Cable	A rope or chain attached to the anchor.
Camber	The upward rise of the weather deck from both sides towards the centreline of the ship.
Cargo hold region	See Ch 1, Sec 1, [2.4.3].
Cargo hold	Generic term for spaces intended to carry cargo, liquid or dry bulk.
Cargo tank	Tank carrying cargoes

Terms	Definition
Cargo tank bulkhead	A boundary bulkhead separating cargo tanks.
Carlings	A stiffening member used to supplement the regular stiffening arrangement.
Casing	The covering or bulkhead around or about any space for protection.
Cellular construction	A structural arrangement where there are two closely spaced boundaries and internal diaphragm plates arranged in such a manner to create small compartments.
Centreline girder	A longitudinal member located on the centreline of the ship.
Chain	Connected metal rings or links used for holding anchor, fastening timber cargoes, etc.
Chain locker	A compartment usually at the forward end of a ship which is used to store the anchor chain.
Chain pipe	A section of pipe through which the anchor chain enters or leaves the chain locker.
Chain stopper	A device for securing the chain cable when riding at anchor as well as securing the anchor in the housed position in the hawse pipe, thereby relieving the strain on the windlass.
Coaming	The vertical boundary structure of a hatch or skylight.
Cofferdams	See Ch 2, Sec 3, [1].
Collar plate	A patch used to, partly or completely, close a hole cut for a longitudinal stiffener passing through a transverse web.
Collision bulkhead	The foremost main transverse watertight bulkhead.
Companionway	A weathertight entrance leading from a ship's deck to spaces below.
Compartment	An internal space bounded by bulkheads or plating.
Continually manned space	A space in which the continuous or prolonged presence of seafarers is necessary for normal operational periods. This includes spaces routinely occupied for a period of 20 minutes or more during normal operational periods.
Corrugated bulkhead	A bulkhead including corrugations and usually fitted with lower and upper stools.
Corrugation	Plating arranged in a corrugated fashion.
Cross deck	The area between cargo hatches.
Cross ties	Large transverse structural members joining longitudinal bulkheads or joining a longitudinal bulkhead with double side structures and used to support them against hydrostatic and hydrodynamic loads.
Deck	A horizontal structure element that defines the upper or lower boundary of a compartment.
Deckhouse	See Ch 1, Sec 1, [2.4.6].
Deck structure	The deck plating with stiffeners, girders and supporting pillars.
Deck transverse	Transverse PSM at the deck.
Deep tank	Any tank which extends between two decks or the shell/inner bottom and the deck above or higher.
Designer	A party who creates documentation submitted to the Society necessary for approval or for information. The designer can be the builder or a party contracted by the builder or owner to create this documentation.
Discharges	Any piping leading through the ship's sides for conveying bilge water, circulating water, drains etc.

Terms	Definition
Docking bracket	A bracket located in the double bottom to locally strengthen the bottom structure for the purposes of docking.
Double bottom structure	The shell plating with stiffeners below the top of the inner bottom and other elements below and including the inner bottom plating.
Doubler	Small piece of plate which is attached to a larger area of plate that requires strengthening in that location. Usually at the attachment point of a stiffener.
Double skin member	Double skin member is defined as a structural member where the idealised beam comprises webs, with top and bottom flanges formed by attached plating.
Duct keel	A keel built of plates in box form. It is used to house ballast and other piping leading forward which otherwise would have to run through the cargo tanks and/or ballast tanks.
Enclosed superstructure	The superstructure with bulkheads forward and/or aft fitted with weather tight doors and closing appliances.
Engine room bulkhead	A transverse bulkhead either directly forward or aft of the engine room.
EPP	Elementary plate panel, the smallest plate element surrounded by structural members, such as stiffeners, PSM, bulkheads, etc.
Face plate	The section of a stiffening member attached to the plate via a web and is usually parallel to the plated surface.
Flange	The section of a stiffening member, typically attached to the web, but is sometimes formed by bending the web over. It is usually parallel to the plated surface.
Flat bar	A stiffener comprised only of a web.
Floor	A bottom transverse member.
Forecastle	A short superstructure situated at the bow.
Fore peak	The area of the ship forward of the collision bulkhead.
Fore peak deck	A short raised deck extending aft from the bow of the ship.
Freeboard deck	Generally the uppermost complete deck exposed to weather and sea, which has permanent means of closing all exposed openings.
Freeing port	An opening in the bulwarks to allow water shipped on deck to run freely overboard.
Gangway	The raised walkway between superstructure, such as between the forecastle and bridge, or between the bridge and poop.
Girder	A collective term for primary supporting structural members.
Gudgeon	A block with a hole in the centre to receive the pintle of a rudder; located on the stern post, it supports and allows the rudder to swing.
Gunwale	The upper edge of the ship’s sides.
Gusset	A plate, usually fitted to distribute forces at a strength connection between two structural members.
Hatch cover	A cover fitted over a hatchway to prevent the ingress of water into the ship’s hold.
Hatchways	Openings, generally rectangular, in a ship’s deck affording access into the compartment below.
Hawse pipe	Steel pipe through which the hawser or cable of anchor passes, located in the ship's bow on either side of the stem, also known as spurling pipe.
Hawser	Large steel wire or fibre rope used for towing or mooring.

Terms	Definition
Hopper plating	Plating running the length of a compartment sloping between the inner bottom and vertical portion of inner hull longitudinal bulkhead.
HP	Bulb profile in accordance with the Holland profile standard.
IACS	International Association of Classification Societies
ICLL	IMO International Convention on Load Lines, 1966, as amended.
IMO	International Maritime Organisation
Independent tank	A self supporting tank.
Inner hull	The innermost plating forming a second layer to the hull of the ship.
Intercostal	Non-continuous member between stiffeners or PSM.
JIS	Japanese industrial standard.
Keel	The main structural member or backbone of a ship running longitudinally along the centreline of the bottom. Usually a flat plate stiffened by a vertical plate on its centreline inside the shell.
Keel line	Keel line is the line parallel to the slope of the keel intersecting the top of the keel at amidships.
Knuckle	A discontinuity in a structural member.
Lightening hole	A hole cut in a structural member to reduce its weight.
Limber hole	A small drain hole cut in a frame or plate to prevent water or oil from collecting.
Local support members	Local stiffening members which only influence the structural integrity of a single panel, e.g. deck beams.
Longitudinal centreline bulkhead	A longitudinal bulkhead located on the centreline of the ship.
Longitudinal hull girder structural members	Structural members that contribute to the longitudinal strength of the hull girder, including: deck, side, bottom, inner bottom, inner hull longitudinal bulkheads including upper sloped plating where fitted, hopper, bilge plate, longitudinal bulkheads, double bottom girders and horizontal girders in wing ballast tanks.
Longitudinal hull girder shear structural members	Structural members that contribute to strength against hull girder vertical shear loads, including: side, inner hull longitudinal bulkheads, hopper, longitudinal bulkheads and double bottom girders.
Manhole	A round or oval hole cut in decks, tanks, etc, for the purpose of providing access.
Margin plate	The outboard strake of the inner bottom and when turned down at the bilge the margin plate (or girder) forms the outer boundary of the double bottom.
MARPOL	IMO International Convention for the Prevention of Pollution from Ships, 1973 and Protocol of 1978, as amended.
Mid-hold	Middle hold(s) of the three cargo hold length FE model as defined in Pt 1, Ch 7, Sec 2, [1.2.2]
Normally unmanned space	A space not normally manned (without the continuous or prolonged presence of seafarers) during normal operational periods. This includes spaces routinely occupied for a period of less than 20 minutes during normal operational periods.
Notch	A discontinuity in a structural member caused by welding.
Oil fuel tank	A tank used for the storage of fuel oil.
Outer shell	Same as shell envelope.

Terms	Definition
Owner	The party that has assumed all duties and responsibilities for registration and operation of the ship and who on assuming such responsibilities has agreed to take over all the duties and responsibilities on delivery of the ship from the builder with valid certificates prepared for the owner.
Pillar	A vertical support placed between decks where the deck is unsupported by the shell or bulkhead.
Pipe tunnel	The void space running in the midships fore and aft lines between the inner bottom and shell plating forming a protective space for bilge, ballast and other lines extending from the engine room to the tanks.
Plate panel	Unstiffened plate surrounded and supported by structural members, such as stiffeners, PSM, bulkheads, etc. See also EPP.
Plating	Sheet of steel supported by stiffeners, primary supporting members or bulkheads.
Poop	The space below an enclosed superstructure at the extreme aft end of a ship.
Poop deck	The first deck above the shelter deck at the aft end of a ship.
Primary supporting members PSM	Members of the beam, girder or stringer type which provide the overall structural integrity of the hull envelope and tank boundaries, e.g. double bottom floors and girders, transverse side structure, deck transverses, bulkhead stringers and vertical webs on longitudinal bulkheads.
Propeller post	The forward post of stern frame, which is bored for propeller shaft.
Rudder post	After post of stern frame to which the rudder is hung (also called stern post).
Scallop	A hole cut into a stiffening member to allow continuous welding of a plate seam.
Scarfing bracket	A bracket used between two offset structural items.
Scantlings	The physical dimensions of a structural item.
Scupper	Any opening for carrying off water from a deck, either directly or through piping.
Scuttle	A small opening in a deck or elsewhere, usually fitted with a cover or lid or a door for access to a compartment.
Shedder plates	Slanted plates that are fitted to minimise pocketing of residual cargo in way of corrugated bulkheads.
Sheer strake	The top strake of a ship's side shell plating.
Shelf plate	A horizontal plate located on the top of a bulkhead stool.
Shell envelope plating	The shell plating forming the effective hull girder exclusive of the strength deck plating.
Side frame	A vertical member attached to the side shell in bulk carriers.
Side shell	The shell envelope plating forming the side portion of the shell envelope above the bilge plating.
Single skin member	A structural member where the idealised beam comprises a web, with a top flange formed by attached plating and a bottom flange formed by a face plate.
Skylight	A deck opening fitted with or without a glass port light and serving as a ventilator for engine room, quarters, etc.
Slop tank	A tank in an oil tanker which is used to collect the oil and water mixtures from cargo tanks after tank washing.
SOLAS	IMO International Convention for the Safety of Life at Sea, 1974 as amended.
Spaces	Separate compartments including tanks.
Stay	Bulwark and hatch coaming brackets.
Stern	The after end of the vessel.

Terms	Definition
Stern frame	The heavy strength members attached to the after end of a hull to form the ship's stern. It includes rudder post, propeller post, and aperture for the propeller.
Stern tube	A tube through which the shaft passes to the propeller; and acts as an after bearing for the shafting. It may be water or oil lubricated.
Stiffener	A collective term for secondary supporting structural members.
Stool	A structure supporting tank bulkheads.
Strake	A course, or row, of shell, deck, bulkhead, or other plating.
Strength deck	The uppermost continuous deck.
Stringer	Horizontal girders linking vertical web frames.
Stringer plate	The outside strake of deck plating.
Superstructure	See Ch 1, Sec 1, [2.4.6].
SWL	Safe working load
Tank	Generic term for spaces intended to carry liquid, such as, seawater, fresh water, oil, liquid cargoes, FO, DO, etc.
Tank top	The horizontal plating forming the bottom of a cargo tank.
Towing pennant	A long rope which is used to effect the tow of a ship.
Topside tank	The tank that normally stretches along the length of the ship's side and occupies the upper corners of the cargo hold in bulk carriers.
Transom	The structural arrangement and form of the aft end of the ship.
Transverse ring	All transverse material appearing in a cross section of the ship's hull, in way of a double bottom floor, vertical web and deck transverse girder.
Transverse web frame	The primary transverse girders which join the ships longitudinal structure.
Tripping bracket	A bracket used to strengthen a structural member under compression against torsional forces.
Trunk	A decked structure similar to a deckhouse, but not provided with a lower deck.
'Tween deck	An abbreviation of between decks, placed between the upper deck and the tank top in the cargo tanks.
Ullage	The quantity represented by the unoccupied space in a tank.
Void	An enclosed empty space in a ship.
Wash bulkhead	A perforated or partial bulkhead in a tank.
Watertight	Watertight means capable of preventing the passage of water through the structure under a head of water for which the surrounding structure is designed.
Weather deck	A deck or section of deck exposed to the elements which has means of closing weathertight, all hatches and openings.
Weathertight	Weathertight means that in any sea conditions water will not penetrate into the ship.
Web	The section of a stiffening member attached perpendicular to the plated surface.
Web frame	Transverse PSM including deck transverse.
Wind and water strakes	The strakes of a ship's side shell plating between the ballast and the deepest load waterline.
Windlass	A winch for lifting and lowering the anchor chain.
Wing tank	The space bounded by the inner hull longitudinal bulkhead and side shell.

SECTION 5
LOADING MANUAL AND LOADING INSTRUMENTS

1 GENERAL REQUIREMENTS

1.1 Application

1.1.1

This Section contains minimum requirements for loading guidance information.

1.1.2

An approved loading manual and an approved loading instrument are to be supplied onboard.

1.1.3

A ship may in actual operation be loaded differently from the loading conditions specified in the loading manual, provided limitations for longitudinal and local strength as defined in the loading manual and loading instrument onboard and applicable stability requirements are not exceeded.

1.1.4

The requirements concerning the loading manual are given in [2] and those concerning the loading instruments in [3].

1.2 Annual and class renewal survey

1.2.1

At each annual and class renewal survey, it is to be checked that the approved loading manual is available onboard.

1.2.2

The loading instrument is to be checked for accuracy at regular intervals by the ship's master by applying test loading conditions.

1.2.3

At each class renewal survey this checking is to be done in the presence of the surveyor.

2 LOADING MANUALS

2.1 General requirements

2.1.1 Definition

The approved loading manual is to be based on the final data of the ship.

A loading manual is a document which describes:

- The loading conditions on which the design of the ship has been based for seagoing and harbour/sheltered water, including permissible limits of still water bending moment and shear force. The conditions specified in the ballast water exchanging procedure and dry docking procedure are to be included in the loading manual,
- The results of the calculations of still water bending moments, shear forces and where applicable limitations due to lateral loads,
- The allowable local loading for the structure (e.g. hatch covers, decks, double bottom, etc), where applicable,
- The relevant operational limitations.

2.1.2 Condition of approval

The approved loading manual is to be based on the final data of the ship.

Modifications resulting in changes to the main data of the ship (e.g. lightship weight, buoyancy distribution, tank volumes or usage, etc), require the loading manual to be updated and re-approved, and subsequently the loading computer system to be updated and re-approved. However, new loading guidance and an updated loading manual need not be resubmitted provided that the resulting draughts, still water bending moments and shear forces do not differ from the originally approved data by more than 2%.

The loading manual is to be prepared in a language understood by the users. If this language is not English, a translation into English is to be included.

2.1.3 Loading conditions

The loading manual is to include the design (cargo and ballast) loading conditions, subdivided into departure and arrival conditions as appropriate, upon which the approval of the hull scantlings is based, as defined in Ch 4, Sec 8.

The loading conditions common to both oil tankers and bulk carriers are listed in Ch 4, Sec 8, [2].

2.1.4 Operational limitations

The loading manual is to describe relevant operational limitations:

- Scantling draught,
- Design minimum ballast draught at midships,
- Design slamming ballast draught forward with forward double bottom ballast tanks filled,
- Design slamming ballast draught forward with any of the forward double bottom ballast tanks empty,
- Maximum allowable cargo density,
- Maximum cargo density in any loading condition in the Loading Manual,
- Maximum service speed,
- Envelope results and permissible limits of still water bending moments and shear forces.

The loading manual must indicate that bulk carriers cannot be operated in seagoing conditions with ballast cargo holds partially filled.

2.2 Requirements specific to oil tankers

2.2.1

The loading manual is to contain the loading conditions described in Ch 4, Sec 8, [3].

This requirement applies in addition to [2.1].

2.3 Requirements specific to bulk carriers

2.3.1

The loading manual is to contain the loading conditions described in Ch 4, Sec 8, [4].

This requirement applies in addition to [2.1].

2.3.2

The loading manual is to describe:

- Envelope results and permissible limits of still water bending moments and shear forces in the flooded conditions according to Ch 4, Sec 4,
- The cargo hold(s) or combination of cargo holds that might be empty at full draught. If no cargo hold is allowed to be empty at full draught, this is to be clearly stated in the loading manual,
- Maximum allowable and minimum required mass of cargo and double bottom contents of each hold as a function of the draught at mid-hold position as defined in Ch 4, Sec 8, [4.3],
- Maximum allowable and minimum required mass of cargo and double bottom contents of any two adjacent holds as a function of the mean draught in way of these holds. This mean draught may be calculated by averaging the draught of the two mid-hold positions as defined in Ch 4, Sec 8, [4.3],
- Maximum allowable tank top loading together with specification of the nature of the cargo for cargoes other than bulk cargoes,
- Maximum allowable load on deck and hatch covers. If the ship is not approved to carry load on deck or hatch covers, this is to be clearly stated in the loading manual,
- Maximum rate of ballast change together with the advice that a load plan is to be agreed with the terminal on the basis of the achievable rates of change of ballast.

2.3.3

The additional following loading conditions, subdivided into departure and arrival conditions as appropriate, are to be included in the loading manual:

- Homogeneous light and heavy cargo loading conditions at maximum draught,
- Alternate light and heavy cargo loading conditions at maximum draught, where applicable,
- *Ballast conditions. For ships having ballast holds adjacent to topside wing, hopper and double bottom tanks, it shall be strengthwise acceptable that the ballast holds are filled when the topside wing, hopper and double bottom tanks are empty,*
- Short voyage conditions, i.e. the ship is loaded to maximum draught but with a limited amount of bunkers, where appropriate,
- Multiple port loading/unloading conditions,
- Deck cargo conditions, where applicable,
- Typical sequences for change of ballast at sea, where applicable,
- Typical loading sequences where the ship is loaded from commencement of cargo loading to reaching full deadweight capacity, for homogeneous conditions, relevant part load conditions and alternate conditions where applicable. Typical unloading sequences for these conditions are also to be included. The typical loading/unloading sequences are also to be developed to not exceed applicable strength limitations. The typical loading sequences are also to be developed paying due attention to loading rate and the deballasting capability. Figure 1 contains, as guidance only, an example of a Loading Sequence Summary Form.

3 LOADING INSTRUMENT

3.1 General requirements

3.1.1 Definition

A loading computer system is a system, which is either analog or digital, by means of which it can be easily and quickly ascertained that, at specified read-out points, relevant operational limitations, such as the still water bending moments, shear forces, and lateral loads, where applicable, in any load or ballast condition do not exceed the specified permissible values.

The loading instrument is ship specific onboard equipment and the results of the calculations are only applicable to the ship for which it has been approved.

An approved loading instrument can not replace an approved loading manual.

3.1.2 Conditions of approval of loading instruments

The loading instrument is subject to approval based on the Rules of the individual Society. The approval is to include:

- Verification of type approval, if any,
- Verification that the final data of the ship has been used,
- Acceptance of number and position of read-out points,
- Acceptance of relevant limits for all read-out points,
- Checking of proper installation and operation of the instrument onboard, in accordance with agreed test conditions, and that a copy of the operation manual is available.

Modifications resulting in changes to the main data of the ship (e.g. lightship weight, buoyancy distribution, tank volumes or usage, etc), require the loading manual to be updated and re-approved, and subsequently the loading instrument to be updated and re-approved. However, new loading guidance and an updated loading instrument need not be resubmitted provided that the resulting draughts, still water bending moments and shear forces do not differ from the originally approved data by more than 2%.

An operational manual is always to be provided for the loading instrument. The operation manual and the instrument output are to be prepared in a language understood by the users. If this language is not English, a translation into English is to be included.

The operation of the loading instrument is to be verified upon installation. It is to be checked that the agreed test conditions and the operation manual for the instrument is available onboard.

3.2 Requirements specific to bulk carriers

3.2.1 General

For BC-A, BC-B and BC-C ships, the loading instrument is to ascertain as applicable:

- The mass of cargo and double bottom contents in way of each hold as a function of the draught at mid-hold position,
- The mass of cargo and double bottom contents of any two adjacent holds as a function of the mean draught in way of these holds,
- That the still water bending moment and shear forces in the hold flooded conditions do not exceed the specified permissible values.

3.2.2 Condition of approval

For BC-A, BC-B and BC-C ships, the approval is to include, as applicable:

- Acceptance of hull girder bending moment limits for all read-out points,
- Acceptance of hull girder shear force limits for all read-out points,

- Acceptance of limits for the mass of cargo and double bottom contents of each hold as a function of draught,
- Acceptance of limits for the mass of cargo and double bottom contents in any two adjacent holds as a function of draught.

4 LOADING SPECIFIC TO BULK CARRIERS

4.1 Guidance for loading/unloading sequences

4.1.1 Scope of application

The requirements given in [4] are applicable to bulk carriers of 150 m in length and above.

4.1.2

The typical loading/unloading sequences are to be developed paying due attention to the loading/unloading rate, the ballasting/deballasting capacity and the applicable strength limitations.

4.1.3

Typical loading and unloading sequences are to be prepared and submitted for approval by the builder.

4.1.4

The typical loading sequences as relevant are to include:

- Alternate light and heavy cargo load condition,
- Homogeneous light and heavy cargo load condition,
- Short voyage condition where the ship is loaded to maximum draught but with limited bunkers,
- Multiple port loading/unloading condition,
- Deck cargo condition,
- Block loading.

4.1.5

The loading/unloading sequences may be port specific or typical.

4.1.6

The sequence is to be built up step by step from commencement of cargo loading to reach full deadweight capacity. Each time the loading equipment changes position to a new hold defines a step. Each step is to be documented and submitted to the Society. In addition to longitudinal strength, the local strength of each hold is to be considered.

4.1.7

For each loading condition, a summary of all steps is to be included. This summary is to highlight the essential information for each step, such as:

- How much cargo is filled in each hold during the different steps,
- How much ballast is discharged from each ballast tank during the different steps,
- The maximum still water bending moment and shear force at the end of each step,
- The ship's trim and draught at the end of each step.

Figure 1 : Loading Sequence Summary Form

Vessel name:	Yard:	Id. number:

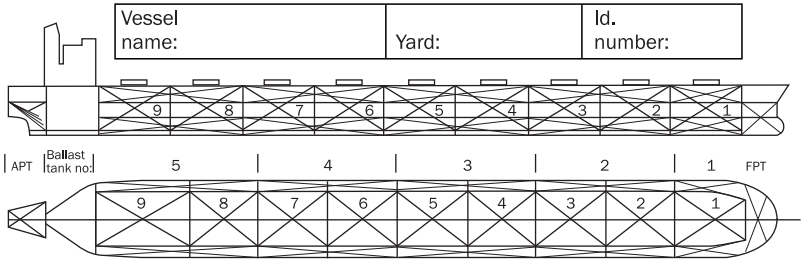

Port (specific or typical):	Condition at commencement of loading/discharging:	
Total mass of cargo to be loaded/discharged:	Condition at end of loading/discharging:	
Dock water density (t/m³):	Maximum loading/discharging rate:	Average loading/discharging rate:
Number of loaders/dischargers:	Maximum ballasting/deballasting rate:	Average ballasting/deballasting rate:

Volume of Hold, Vh (m³)									
Height of hold, h (m)									

Note: During each pour it it has to be controlled that allowable limits for hull girder shear forces, bending moments and mass in holds are not exceeded. Loading/discharging operations may have to be paused to allow fo ballasting/deballasting in order to keep actual values within limits.

	Hold content at commencement of loading/discharging								
Cargo mass									
Density (t/m³)									
Grade									

Wings or peaks	APT	Ball. no. 5	Ball. no. 4	Hold. no. 6	Ball. no. 3	Hold. no. 4	Ball. no. 2	Ball. no. 1	FPT
Upper									
Lower/Peaks									

Ballast content at commencement of loading/discharging

Commencement of loading/discharging (sea)				
T aft (m)	T rim (m)	T fwd (m)	Maximum S.F. (%)	Maximum B.M. (%)

Pour no. /grade	Hold 9	Hold 8	Hold 7	Hold 6	Hold 5	Hold 4	Hold 3	Hold 2	Hold 1	Upper Lower/Peaks
1										Upper
										Lower/Peaks
2										Upper
										Lower/Peaks
3										Upper
										Lower/Peaks
4										Upper
										Lower/Peaks
5										Upper
										Lower/Peaks
6										Upper
										Lower/Peaks
7										Upper
										Lower/Peaks
8										Upper
										Lower/Peaks
										Upper
										Lower/Peaks
Draft Survey (for loading):	Total cargo onboard (t):				Remaining cargo to be loaded (t):					Total amount of bunkers onboard (t):
n-1										Upper
										Lower/Peaks
n										Upper
										Lower/Peaks

CARGO OPERATIONS

APT	Ballast tank no. 5	Ballast tank no. 4	No.5 Ballast hold	Ballast tank no.3	No.4 Ballast hold	Balalst tank no. 2	Ballast tank no.1	FPT

BALLAST OPERATIONS

Values at end of pour (from harbour to sea)				
T aft (m)	T rim (m)	T fwd (m)	Maximum S.F. (%)	Maximum B.M. (%)

	Hold content at end of loading/discharging								
Cargo mass:									
Total mass loaded/discharge (t):									

Wings or peaks	APT	Ball. no. 5	Ball. no. 4	No. 6 hold	Ball. no. 3	No. 4 hold	Ball. no. 2	Ball. no. 1	FPT
Upper									
Lower/Peaks									

Ballast content at end of loading/discharging

Values at end of loading/discharging (sea)				
T aft (m)	T rim (m)	T fwd (m)	Maximum S.F. (%)	Maximum B.M. (%)

	Maximum occuring values among all conditions above									
Net load on Double Bottom:										tons/m²
Net load in two adjacent holds:										tons

Net load on double bottom = (Mh/V) h-T (t/m²)
- where: Mh = Mass in hold + mass in DB (t)
V = Total volume of hold (m³)
h = height of hold from inner bottom to top of coaming (m)
T = draught (m)

Approved by:

Place, date, stamp and sign

PART 1 CHAPTER 2

GENERAL ARRANGEMENT DESIGN

Table of Contents

SECTION 1
General
1 General
SECTION 2
Subdivision Arrangement
1 Watertight Bulkhead Arrangement
2 Collision Bulkhead
3 Aft Peak Bulkhead
SECTION 3
Compartment Arrangement
1 Cofferdams
2 Double Bottom
3 Double Side
4 DELETED [RCN1 to 01 JAN 2020]
5 DELETED [RCN1 to 01 JAN 2020]
6 DELETED [RCN1 to 01 JAN 2020]
7 Ballast Tanks
SECTION 4
Access and Escape Arrangement
1 Enclosed spaces
2 Cargo Area and Forward Spaces

SECTION 1
GENERAL

1 GENERAL

1.1 General

1.1.1

This chapter covers the general structural arrangement requirements for the ship.

1.1.2

Arrangements for continually manned spaces are to include consideration of ventilation, lighting, noise and whole-body vibration in accordance with industry standards accepted by the Society. See also Ch 2, Sec 4, [1.1.1] to Ch 2, Sec 4, [1.1.3].

1.1.3

Arrangements for normally unmanned spaces are to include consideration of lighting and ventilation for periodic inspections, survey and maintenance in accordance with industry standards accepted by the Society. See also Ch 2, Sec 4, [1.1.1] to Ch 2, Sec 4, [1.1.5].

SECTION 2
SUBDIVISION ARRANGEMENT

1 WATERTIGHT BULKHEAD ARRANGEMENT

1.1 Number and disposition of watertight bulkheads

1.1.1

All ships are to have at least the following transverse watertight bulkheads:

a) One collision bulkhead.

b) One aft peak bulkhead.

c) One bulkhead forward of the machinery space, and one bulkhead at the aft end of the machinery space which may be the aft peak bulkhead.

1.1.2

In the case of ships with an electrical propulsion plant, both the generator room and the engine room are to be enclosed by watertight bulkheads.

1.1.3

In addition to the requirements of [1.1.1] and [1.1.2], the number and disposition of bulkheads are to be arranged to suit the requirements for subdivision, floodability and damage stability, and are to be in accordance with the requirements of national regulations.

1.1.4

For bulk carriers less than 150 m in length not required to comply with subdivision requirements, bulkheads not less in number than indicated in Table 1 are to be fitted.

Table 1 : Number of bulkheads for bulk carriers less than 150 m in length

Length in m	Number of bulkheads for ships with aft machinery (1)
$90 \le L < 105$	4
$105 \le L < 120$	5
$120 \le L < 145$	6
$145 \le L < 150$	7
(1) Aft peak bulkhead and aft machinery bulkhead are the same.	

1.1.5

The bulkheads in the cargo hold region are to be spaced at uniform intervals as far as practicable.

1.2 DELETED [RCN1 to 01 JAN 2020]

1.2.1

DELETED

[RCN1 to 01 JAN 2020]

1.2.2

DELETED

[RCN1 to 01 JAN 2020]

2 COLLISION BULKHEAD

2.1 Extent and position of collision bulkhead

2.1.1

A collision bulkhead is to be fitted on all ships and is to extend to the freeboard deck. It is to be located between 0.05 L_{LL} or 10 m, whichever is less, and except as may be permitted by the Administration, 0.08 L_{LL} or 0.05 L_{LL} + 3 m, whichever is the greater, aft of the reference point, where the reference point is as defined in [2.1.2].

2.1.2

For ships without bulbous bows the reference point is to be taken where the forward end of L_{LL} coincides with the forward side of stem, on the waterline which L_{LL} is measured. For ships with bulbous bows, it is to be measured from the forward end of L_{LL} a distance x forward; where x is to be taken as the lesser of the following:

a) Half the distance, from FP_{LL} to the extreme forward end of the bulb extension.

b) 0.015 L_{LL}.

c) 3.0 m.

2.2 Arrangement of collision bulkhead

2.2.1

In general, the collision bulkhead is to be in one plane; however, the bulkhead may have steps or recesses provided that they are within the limits prescribed in [2.1.1] and [2.1.2].

2.2.2

Doors, manholes, permanent access openings or ventilation ducts are not to be cut in the collision bulkhead below the freeboard deck. Where the collision bulkhead is extended above the freeboard deck, the number of openings in the extension is to be kept to a minimum compatible with the design and proper working of the ship. Reference is made to Ch 1, Sec 2, [2.1].

3 AFT PEAK BULKHEAD

3.1 General

3.1.1

An aft peak bulkhead, enclosing the stern tube and rudder trunk in a watertight compartment, is to be provided. Where the shafting arrangements make enclosure of the stern tube in a watertight compartment impractical, alternative arrangements are specially considered.

3.1.2

The aft peak bulkhead may be stepped below the freeboard deck, provided that the degree of safety of the ship as regards subdivision is not thereby diminished.

[RCN1 to 01 JAN 2020]

3.1.3

The aft peak bulkhead location on ships powered and/or controlled by equipment that do not require the fitting of a stern tube and/or rudder trunk are also subject to special consideration.

3.1.4

Provided that the aft peak bulkhead extends above the deepest load line, termination of the afterpeak bulkhead on a watertight deck lower than the freeboard deck can be accepted. In order to provide such a watertight deck a tight sealing of the rudder stock shall be fitted in way of this deck or above.

[RCN1 to 01 JAN 2020]

SECTION 3
COMPARTMENT ARRANGEMENT

1 COFFERDAMS

1.1 Definition

1.1.1

A cofferdam means an empty space arranged so that compartments on each side have no common boundary; a cofferdam may be located vertically or horizontally. As a rule, a cofferdam is to be kept gas-tight and is to be properly ventilated, provided with drainage arrangement, and of sufficient size to allow proper inspection, maintenance and safe evacuation.

1.2 Arrangement of cofferdams

1.2.1

Cofferdams are to be provided between compartments intended for liquid hydrocarbons (including fuel oil, lubricating oil) and those intended for fresh water (water for propelling machinery and boilers) as well as tanks intended for the carriage of liquid foam for fire extinguishing.

1.2.2

Furthermore, tanks carrying fresh water for human consumption are to be separated from other tanks containing substances hazardous to human health by cofferdams or other means as approved by the Society.

Note 1: Normally, tanks for fresh water and water ballast are considered non-hazardous.

1.2.3

Where a corner to corner situation occurs, tanks are not considered to be adjacent.

1.2.4

The cofferdams specified in [1.2.1] may be waived when deemed impracticable or unreasonable by the Society in relation to the characteristics and dimensions of the spaces containing such tanks, provided that:

- the thickness of common boundary plates of adjacent tanks is increased, with respect to the thickness obtained according to Ch 6, Sec 4, by 2 mm in the case of tanks carrying fresh water or boiler feed water, and by 1 mm in all other cases,
- the sum of the throats of the weld fillets at the edges of these plates is not less than the thickness of the plates themselves,
- the structural test is carried out with a test pressure increased by 1 m with respect to Ch 1, Sec 2, [3.8.4].

2 DOUBLE BOTTOM

2.1 General

2.1.1

A double bottom need not be fitted in way of watertight tanks, including dry tanks of moderate size provided the safety of the ship is not impaired in the event of bottom or side damage as regulated in SOLAS II-1, Reg 9.

2.2 Extent of double bottom

2.2.1

For bulk carriers, a double bottom is to be fitted extending from the collision bulkhead to the aft peak bulkhead, as far as this is practicable and compatible with the design and proper working of the ship.

For oil tankers, a double bottom is to be fitted to protect the cargo hold region and pump rooms. However the double bottom below pump rooms may be omitted provided that it is in compliance with MARPOL, Annex I, Ch 4, Reg 22.

2.2.2

Where double bottom is required to be fitted, the inner bottom is to be continued out to the ship side in such a manner as to protect the bottom to the turn of the bilge in areas where hopper or double side spaces are not provided.

2.3 Height of double bottom

2.3.1

Unless otherwise specified, the height of the double bottom is not to be less than the lesser of:

- For oil tankers: $B/15$ or 2 m, however not less than 1.0 m measured at right angles to the shell plating at any cross section.
- For bulk carriers: $B/20$ or 2 m, however not less than 0.76 m measured vertically from the plane parallel with keel line to inner bottom.

2.4 Small wells in double bottom tank

2.4.1

Small wells constructed in the double bottom are not to extend in depth more than necessary. A well extending to the outer bottom, may, however, be permitted at the after end of the shaft tunnel of the ship. Other wells may be permitted by the Society if it is satisfied that the arrangements give protection equivalent to that afforded by a double bottom that complies with [2.1].

3 DOUBLE SIDE

3.1 Double side width

3.1.1 Oil tankers

The minimum double side width, W_{ds}, in m, is to be taken as the lesser of:

$$W_{ds} = 0.5 + \frac{DWT}{20000} \text{ but not less than 1.0}$$

W_{ds} = 2.0

3.1.2 Bulk carriers

Double side skin means a configuration where each ship side is constructed by the side shell and a longitudinal bulkhead connecting the double bottom and the deck. Hopper side tanks and topside tanks may, where fitted, be integral parts of the double side skin configuration.

The minimum double side width, W_{ds}, is not to be less than 1 m measured perpendicular to the side shell.

3.2 Minimum clearance inside the double side

3.2.1 Definition

The minimum clearance is defined as the shortest distance measured between assumed lines connecting the inner surfaces of the stiffeners on the inner and outer hulls.

3.2.2 Minimum clearance dimensions

The minimum clearance between the inner surfaces of the stiffeners inside the double side is not to be less than:

- 600 mm when the inner and/or the outer hulls are transversely framed,
- 800 mm when the inner and the outer hulls are longitudinally framed.

Outside the parallel part of the cargo hold, the clearance may be reduced but is not to be less than 600 mm.

4 DELETED [RCN1 TO 01 JAN 2020]

4.1

4.1.1

DELETED

[RCN1 to 01 JAN 2020]

5 DELETED [RCN1 TO 01 JAN 2020]

5.1

5.1.1

DELETED

[RCN1 to 01 JAN 2020]

6 DELETED [RCN1 TO 01 JAN 2020]

6.1

6.1.1

DELETED

[RCN1 to 01 JAN 2020]

7 BALLAST TANKS

7.1 Capacity and disposition of ballast tanks

7.1.1

All ships are to have ballast tanks of sufficient capacity that the ship may operate safely on ballast voyage. The capacity of ballast is to be at least such that, in any ballast condition at any part of the voyage, including the conditions consisting of lightweight plus ballast only, the ship's draught and trim can meet the requirements defined in:

- For oil tankers, Ch 4, Sec 8, [3.1].
- In addition, for oil tankers, the moulded draught amidships, T_{mid}, excluding any hogging or sagging correction, is not to be less than:

  T_{mid} = 2.0 + 0.02 L, in m.
- For bulk carriers, Ch 4, Sec 8, [4.1].

SECTION 4
ACCESS AND ESCAPE ARRANGEMENT

1 ENCLOSED SPACES

1.1 General

1.1.1 Special considerations

Human element considerations, including enhanced safety and productivity, may be considered using Recommendation No. 132 or other ergonomic standards accepted by the Society.

Where spaces have special considerations or requirements for access; e.g. security restrictions for the CO2 room to prevent unintentional release, these are to be considered in conjunction with the requirements of this section, and any conflicts should be raised as soon as possible for consideration by the Society.

1.1.2 Enclosed spaces

All enclosed spaces are to be accessible with appropriate access arrangements for easy inspection, survey and maintenance i.e. access is to allow unobstructed passage to items for inspection for personnel wearing the appropriate clothing, including personal protective equipment, and using all necessary tools and test equipment.

Provision is also to be made for appropriate arrangements to facilitate emergency egress of inspection personnel or ships' crew in accordance with industry standards accepted by the Society, notwithstanding the requirements set out in SOLAS or other relevant regulatory instruments.

1.1.3 Spaces not explicitly covered by SOLAS

For spaces which are not explicitly covered by SOLAS, Ch II-1, Reg 3-6, the builder is to provide appropriate accesses arrangements for easy inspection, survey and maintenance in accordance with industry standards accepted by the Society. See also [1.1.5].

Provision is also to be made for appropriate arrangements to facilitate emergency egress of inspection personnel or ships' crew in accordance with industry standards accepted by the Society.

Special measures for inspection and maintenance are to be put in place for small closed spaces for which the design causes impracticality for the access.

1.1.4 Ventilation of normally unmanned spaces

Unless otherwise specifically detailed in these Rules, normally unmanned spaces are to be capable of being ventilated through natural or forced ventilation. Such ventilation could be achieved through the inclusion of mushroom ventilators, gooseneck ventilators, ventilators with weather proof covers etc. Exchange air may be provided through permanent or temporary mechanical ventilation and air trunk systems or a suitable air exchange path through tank openings and ventilators.

1.1.5 Permanent means of access to normally unmanned spaces

Unless otherwise specifically detailed in these Rules, permanent means of access to normally unmanned spaces is to be provided in accordance with SOLAS, Ch II-1, Reg. 3-6.

For enclosed spaces, which are not explicitly covered by SOLAS, Ch II-1, Reg. 3-6, the requirements of the Convention and associated Resolutions should be applied as far as practicable. The size of openings providing access to or emergency egress from spaces not entered during operation, entered for maintenance or entered for regular inspections shall, in general, not be less than 600mm x 400mm if oval or in accordance with industry standards accepted by the Society if circular.

2 CARGO AREA AND FORWARD SPACES

2.1 General

2.1.1 Means of access

Each space is to be provided with means of access as regulated in SOLAS, Ch II-1, Reg 3-6. This requirement applies to:

- Oil tankers.
- Bulk carriers having a length of 150 m or above, irrespective of their gross tonnage.

2.1.2

All tanks are to be accessible for easy inspection.

PART 1 CHAPTER 3

STRUCTURAL DESIGN PRINCIPLES

Table of Contents

SECTION 1
Materials
1 General
2 Hull Structural Steel
3 Steels for Forging and Casting
4 Aluminium Alloys
5 Other Materials and Products
SECTION 2
Net Scantling Approach
1 General
SECTION 3
Corrosion Additions
1 General
SECTION 4
Corrosion Protection
1 General
2 Sacrificial Anodes
SECTION 5
Limit States
1 General
2 Criteria
3 Strength Check Against Impact Loads
SECTION 6
Structural Detail Principles
1 Application
2 General Principles
3 Stiffeners
4 Primary Supporting Members (PSM)
5 Intersection of Stiffeners and Primary Supporting Members
6 Openings
7 Double Bottom Structure
8 Double Side Structure
9 Deck Structure
10 Bulkhead Structure
11 Pillars

SECTION 7
Structural Idealisation

1 Structural Idealisation of Stiffeners and Primary Supporting Members
2 Plates
3 Stiffeners
4 Primary Supporting Members

SECTION 1
MATERIALS

1 GENERAL

1.1 Standard of material

1.1.1

Materials used during construction are to comply with the Rules for Materials of the Society.

1.1.2

Other materials than those covered under [1.1.1] may be accepted, provided their specification (e.g. manufacture, chemical composition, mechanical properties, welding) is submitted to the Society for approval.

1.2 Testing of materials

1.2.1

Materials are to be tested in compliance with the applicable requirements of Rules for Materials of the Society.

1.3 Manufacturing process

1.3.1

The requirements of this section presume that welding and other cold or hot manufacturing processes are carried out in compliance with current sound working practice defined in the Rules and/or documents of the individual Society which incorporate IACS UR W and the applicable requirements of Rules for Materials of the Society.

In particular:

- Parent material and welding processes are to be within the limits stated for the specified type of material for which they are intended.
- Specific preheating may be required before welding.
- Welding or other cold or hot manufacturing processes may need to be followed by an adequate heat treatment.

2 HULL STRUCTURAL STEEL

2.1 General

2.1.1 Young's modulus and Poisson's ratio

The Young's modulus for Carbon steel materials is equal to 206,000 N/mm^2 and the Poisson's ratio equal to 0.3.

2.1.2 Steel material grades and mechanical properties

Steel having a specified minimum yield stress of 235 N/mm^2 is regarded as normal strength hull structural steel and is denoted by 'MS' for mild steel. Steel having a higher specified minimum yield stress is regarded as higher strength hull structural steel and is denoted 'HT' for high tensile steel.

Material grades of hull structural steels are referred to as follows:

a) A, B, D and E denote normal strength steel grades.

b) AH, DH and EH denote higher strength steel grades.

Table 1 gives the mechanical characteristics of steels generally used in the construction of ships.

Table 1 : Mechanical properties of hull steels

Steel grades for plates with $t_{as_built} \leq 100$ mm	R_{eH}, specified minimum yield stress, in N/mm^2	R_m, specified tensile strength, in N/mm^2
A-B-D-E	235	400 – 520
AH32-DH32-EH32-FH32	315	440 – 570
AH36-DH36-EH36-FH36	355	490 – 630
AH40-DH40-EH40-FH40	390	510 – 660

2.1.3

Higher strength steels other than those indicated in Table 1 are considered by the Society on a case-by-case basis.

2.1.4 High tensile steel

When steels with a specified minimum yield stress R_{eH} other than 235 N/mm^2 are used, hull girder strength and hull scantlings are to be determined by taking into account the material factor, k defined in [2.2].

2.1.5 Onboard documents

It is required to keep onboard a plan indicating the steel types and grades adopted for the hull structures. Where steels other than those indicated in Table 1 are used, their mechanical and chemical properties, as well as any workmanship requirements or recommendations, are to be available onboard together with the above plan.

2.2 Material factor, k

2.2.1

Unless otherwise specified, the material factor, k of normal and higher strength steel for hull girder strength and scantling purposes is to be taken as defined in Table 2, as a function of the specified minimum yield stress R_{eH}.

For intermediate values of R_{eH}, k is obtained by linear interpolation.

Steels with a specified minimum yield stress R_{eH}, greater than 390 N/mm^2 are considered by the Society on a case-by-case basis.

Table 2 : Material factor, k

R_{eH}, specified minimum yield stress, in N/mm^2	k
235	1.00
315	0.78
355	0.72
390	0.68

2.3 Steel grades

2.3.1

Materials in the various strength members are not to be of lower grade than those corresponding to the material classes and grades specified in Table 3 to Table 7. General requirements are given in Table 3, while additional minimum requirements for ships with length exceeding 150 m and 250 m, single side bulk carriers with length exceeding 150 m, are given in Table 4 to Table 6. The material grade requirements for hull members of each class depending on the thickness are defined in Table 7.

Table 3 : Material classes and grades

Structural member category		Material class/grade
Secondary	A1. Longitudinal bulkhead strakes, other than those belonging to the Primary category A2. Deck plating exposed to weather, other than that belonging to the Primary or Special category A3. Side plating	- Class I within 0.4 *L* amidships - Grade A/AH outside 0.4 *L* amidships
Primary	B1. Bottom plating, including keel plate B2. Strength deck plating, excluding that belonging to the Special category B3. Continuous longitudinal plating of strength members above strength deck, excluding hatch coamings B4. Uppermost strake in longitudinal bulkhead B5. Vertical strake (hatch side girder) and uppermost sloped strake in topside tank	- Class II within 0.4 *L* amidships - Grade A/AH outside 0.4 *L* amidships
Special	C1. Sheer strake at strength deck (1) C2. Stringer plate in strength deck (1) C3. Deck strake at longitudinal bulkhead, excluding deck plating in way of inner-skin bulkhead of double-hull ships (1)	- Class III within 0.4 *L* amidships - Class II outside 0.4 *L* amidships - Class I outside 0.6 *L* amidships
	C4. Strength deck plating at outboard corners of cargo hatch openings for ships with hatch opening configurations similar to those of container carriers	- Class III within 0.4 *L* amidships - Class II outside 0.4 *L* amidships - Class I outside 0.6 *L* amidships - Min. Class III within cargo hold region
	C5. Strength deck plating at corners of cargo hatch openings	- Class III within 0.6 *L* amidships - Class II within rest of cargo hold region
	C6. Bilge strake of ships with double bottom over the full breadth and with length less than 150 m	- Class II within 0.6 *L* amidships - Class I outside 0.6 *L* amidships
	C7. Bilge strake in other ships (1)	- Class III within 0.4 *L* amidships - Class II outside 0.4 *L* amidships - Class I outside 0.6 *L* amidships
	C8. Longitudinal hatch coamings of length greater than 0.15 *L* including coaming top plate and flange C9. End brackets and deckhouse transition of longitudinal cargo hatch coamings	- Class III within 0.4 *L* amidships - Class II outside 0.4 *L* amidships - Class I outside 0.6 *L* amidships - Not to be less than Grade D/DH
(1)	Single strakes required to be of class III within 0.4*L* amidships are to have breadths not less than 800+5*L*, in mm, need not be greater than 1800 mm, unless limited by the geometry of the ship's design.	

Table 4 : Minimum material grades for ships with length exceeding 150 m

Structural member category	Material grade
Longitudinal plating of strength deck where contributing to the longitudinal strength	Grade B/AH within 0.4 *L* amidships
Continuous longitudinal plating of strength members above strength deck	Grade B/AH within 0.4 *L* amidships
Single side strakes for ships without inner continuous longitudinal bulkhead(s) between bottom and the strength deck	Grade B/AH within cargo hold region

Table 5 : Minimum material grades for ships with length exceeding 250 m

Structural member category (1)	Material grade
Shear strake at strength deck	Grade E/EH within 0.4 *L* amidships
Stringer plate in strength deck	Grade E/EH within 0.4 *L* amidships
Bilge strake	Grade D/DH within 0.4 *L* amidships

(1) Single strakes required to be of Grade E/EH and within 0.4 *L* amidships are to have breadths not less than 800+5 *L* (mm), need not be greater than 1800 (mm), unless limited by the geometry of the ship's design.

Table 6 : Minimum material grades for single side skin bulk carriers with length exceeding 150 m

Structural member category	Material grade
Lower bracket of ordinary side frame (1), (2)	Grade D/DH
Side shell strakes included totally or partially between the two points located to 0.125ℓ above and below the intersection of side shell and bilge hopper sloping plate or inner bottom plate (2)	Grade D/DH

(1) The term 'lower bracket' means webs of lower brackets and webs of the lower part of side frames up to the point of 0.125ℓ above the intersection of side shell and bilge hopper sloping plate or inner bottom plate.

(2) The span of the side frame, ℓ, is defined as the distance between the supporting structures (see Pt 2, Ch 1, Sec 2, Figure 2).

Table 7 : Material grade requirements for classes I, II and III

Class	I		II		III	
As-built thickness, in mm	MS	HT	MS	HT	MS	HT
$t \le 15$	A	AH	A	AH	A	AH
$15 < t \le 20$	A	AH	A	AH	B	AH
$20 < t \le 25$	A	AH	B	AH	D	DH
$25 < t \le 30$	A	AH	D	DH	D	DH
$30 < t \le 35$	B	AH	D	DH	E	EH
$35 < t \le 40$	B	AH	D	DH	E	EH
$40 < t \le 50$	D	DH	E	EH	E	EH

2.3.2

For strength members not mentioned in Table 3 to Table 6, Grade A/AH may be used upon agreement of the Society.

2.3.3

Plating materials for stern frames and shaft brackets are in general not to be of lower grades than corresponding to Class II.

2.4 Structures exposed to low air temperature

2.4.1

For ships intended to operate in areas with low air temperatures refer to Ch 1, Sec 2, [3.4.4].

2.5 Through thickness property

2.5.1

Where tee or cruciform connections employ partial or full penetration welds, and the plate material is subject to significant tensile strain in a direction perpendicular to the rolled surfaces, consideration is to be given to the use of special material with specified through thickness properties, in accordance with the Rules for Materials of the Society. These steels are to be designated on the approved plan by the required steel strength grade followed by the letter Z (e.g. EH36Z).

2.6 Stainless steel

2.6.1

The reduction of strength of stainless steel with increasing temperature is to be taken into account in the calculation of the material factor, *k* and in the material Young's modulus, *E*.

Stainless steels are considered by the Society on a case-by-case basis.

3 STEELS FOR FORGING AND CASTING

3.1 General

3.1.1

Mechanical and chemical properties of steels for forging and casting to be used for structural members are to comply with the applicable requirements of the Rules for Materials of the Society.

3.1.2

Steels of structural members intended to be welded are to have mechanical and chemical properties deemed appropriate for this purpose by the Society on a case-by-case basis.

3.1.3

The steels used are to be tested in accordance with the applicable requirements of the Rules for Materials of the Society.

3.2 Steels for forging

3.2.1

Rolled bars may be accepted in lieu of forged products, after consideration by the Society on a case-by-case basis. In such case, compliance with the applicable requirements of the Rules for Materials of the Society, relevant to the quality and testing of rolled parts accepted in lieu of forged parts, may be required.

3.3 Steels for casting

3.3.1

Cast parts intended for stems and stern frames in general may be made of C and C-Mn weldable steels, having specified minimum tensile strength, R_m = 400 N/mm^2, in accordance with the applicable requirements of the Society's Rules for Materials.

3.3.2

The welding of cast parts to main plating contributing to hull strength members is considered by the Society on a case-by-case basis.

The Society may require additional properties and tests for such casting, in particular impact properties which are appropriate to those of the steel plating on which the cast parts are to be welded and non-destructive examinations.

4 ALUMINIUM ALLOYS

4.1 General

4.1.1

The use of aluminium alloys in superstructures, deckhouses, hatch covers, helicopter platforms, or other local components is to be specially considered. A specification of the proposed alloys and their proposed method of fabrication is to be submitted for approval.

Material requirements and scantlings are to comply with the Rules for Materials of the Society. Series 5000 aluminium-magnesium alloys or series 6000 aluminium-magnesium-silicon alloys are to be used.

4.1.2

In the case of structures subjected to low service temperatures or intended for other specific applications, the alloys to be employed are to be agreed by the Society.

4.1.3

Unless otherwise agreed, the Young's modulus for aluminium alloys is equal to 70,000 N/mm^2 and the Poisson's ratio equal to 0.33.

4.1.4

Details of the proposed method of joining any aluminium and steel structures are to be submitted for approval.

4.2 Extruded plating

4.2.1

Extrusions with built-in plating and stiffeners, referred to as extruded plating, may be used.

4.2.2

In general, the application of extruded plating is limited to decks, bulkheads, superstructures and deckhouses. Other uses may be permitted by the Society on a case-by-case basis.

4.2.3

Extruded plating is to be oriented so that the stiffeners are parallel to the direction of main stresses.

4.2.4

Connections between extruded plating and primary members are to be given special attention.

4.3 Mechanical properties of weld joints

4.3.1

Welding heat input lowers locally the mechanical strength of aluminium alloys hardened by work hardening (series 5000 other than condition O or H111) or by heat treatment (series 6000).

4.3.2

The as-welded properties of aluminium alloys of series 5000 are in general those of condition O or H111. Higher mechanical characteristics may be considered, provided they are duly justified.

4.3.3

The as-welded properties of aluminium alloys of series 6000 are to be agreed by the Society.

4.4 Material factor, *k*

4.4.1

The material factor, *k* for aluminium alloys is to be obtained from the following formula:

$$k = \frac{235}{R'_{lim}}$$

where:

R'_{lim} : Minimum guaranteed yield stress of the parent metal in welded condition $R'_{p0.2}$, in N/mm^2, but not to be taken greater than 70% of the minimum guaranteed tensile strength of the parent metal in welded condition R'_m, in N/mm^2.

$R'_{p0.2}$: Minimum guaranteed yield stress, in N/mm^2, of material in welded condition.

$$R'_{p0.2} = \eta_1 R_{p0.2}$$

R'_m : Minimum guaranteed tensile strength, in N/mm^2, of material in welded condition.

$$R'_m = \eta_2 R_m$$

$R_{p0.2}$: Minimum guaranteed yield stress, in N/mm^2, of the parent metal in delivery condition.

R_m : Minimum guaranteed tensile strength, in N/mm^2, of the parent metal in delivery condition.

η_1, η_2 : Specified in Table 8.

Table 8 : Aluminium alloys - Coefficients for welded construction

Aluminium alloy	η_1	η_2
Alloys without work-hardening treatment (series 5000 in annealed condition O or annealed flattened condition H111)	1	1
Alloys hardened by work hardening (series 5000 other than condition O or H111)	$R'_{p0.2} / R_{p0.2}$	R'_m / R_m
Alloys hardened by heat treatment (series 6000) (1)	$R'_{p0.2} / R_{p0.2}$	0.6
(1) When no information is available, coefficient η_1 is to be taken equal to the metallurgical efficiency coefficient β as defined in Table 9.		

Table 9 : Aluminium alloys - Metallurgical efficiency coefficient β

Aluminium alloy	Temper condition	As-built thickness, in mm	β
6005A (Open sections)	T5 or T6	$t \leq 6$	0.45
		$t > 6$	0.40
6005A (Closed sections)	T5 or T6	All	0.50
6061 (Sections)	T6	All	0.53
6082 (Sections)	T6	All	0.45

4.4.2

In the case of welding of two different aluminium alloys, the material factor, *k* to be considered for the scantlings is the greater material factor of the aluminium alloys of the assembly.

4.5 Others

4.5.1

Aluminium fittings in tanks used for the carriage of oil, and in cofferdams and pump rooms are to be avoided. Where fitted, aluminium fittings, units and supports, in tanks used for the carriage of oil, cofferdams and pump rooms are to satisfy the requirements of Pt 2, Ch 2, Sec 2, [1.2] for aluminium anodes.

4.5.2

The underside of heavy portable aluminium structures such as gangways, is to be protected by means of a hard plastic or wood cover, or other approved means, in order to avoid the creation of smears. Such protection is to be permanently and securely attached to the structures.

5 OTHER MATERIALS AND PRODUCTS

5.1 General

5.1.1

Other materials and products such as parts made of iron castings, where allowed, products made of copper and copper alloys, rivets, anchors, chain cables, cranes, masts, derrick posts, derricks, accessories and wire ropes are to comply with the applicable requirements of the Rules for Materials of the Society.

5.1.2

The use of plastics or other special materials not covered by these Rules is to be considered by the Society on a case-by-case basis. In such cases, the requirements for the acceptance of the materials concerned are to be agreed by the Society.

5.2 Iron cast parts

5.2.1

As a rule, the use of grey iron, malleable iron or spheroidal graphite iron cast parts with combined ferritic/perlitic structure is allowed only to manufacture low stressed elements of secondary importance.

5.2.2

Ordinary iron cast parts may not be used for windows or sidescuttles; the use of high grade iron cast parts of a suitable type is to be considered by the Society on a case-by-case basis.

SECTION 2
NET SCANTLING APPROACH

SYMBOLS

For symbols not defined in this section, refer to Ch 1, Sec 4

t : Net thickness in mm.

t_c : Corrosion addition in mm.

t_{gr} : Gross thickness in mm.

h_{stf} : Height of stiffener or primary supporting member in mm.

h_w : Web height of stiffener or primary supporting member in mm.

t_w : Web thickness of stiffener or primary supporting member in mm.

b_f : Face plate width of stiffener or primary supporting member in mm.

t_f : Face plate thickness of stiffener or primary supporting member in mm.

t_p : Thickness of the plating attached to a stiffener or to a primary supporting member in mm.

d_e : Distance in mm, from the upper edge of the web to the top of the flange for *L3* profiles, see Figure 3.

d_f : Distance in mm, for the extension of flange for L2 profiles, see Figure 3.

t_{as_built} : As-built thickness, in mm, taken as the actual thickness provided at the newbuilding stage.

t_{gr_off} : Gross offered thickness, in mm, as defined in [1.2.2].

t_{gr_req} : Gross required thickness, in mm, as defined in [1.2.1].

t_{off} : Net offered thickness, in mm, as defined in [1.2.3].

t_{dm} : Design production margin, in mm, taken as the thickness difference between offered gross thickness and required gross thickness (equal also to the difference between offered net and required net thickness) as a result of scantlings applied by the designer or builder to suit design or production situation. This difference in thickness is not to be considered as an additional corrosion margin.

t_{req} : Net required thickness, in mm, as required in [1.3.1].

t_{vol_add} : Thickness for voluntary addition, in mm, taken as the thickness voluntarily added as the owner's extra margin or builder's extra margin for corrosion wastage in addition to t_c.

t_{res} : Reserve thickness, in mm, taken equal to 0.5 mm.

t_{c1}, t_{c2} : Corrosion addition on one side of the considered structural member, in mm, as defined in Ch 3, Sec 3, Table 1.

1 GENERAL

1.1 Application

1.1.1 Net thickness approach

The net thickness, t, of a structural element is required for structural strength in compliance with the design basis. The corrosion addition, t_c, for a structural element is derived independently from the net scantling requirements as shown in Figure 1. This approach clearly separates the net thickness from the thickness

added to address the corrosion that is likely to occur during the ship-in-operation phase. This approach enables the status of the structure with respect to corrosion to be clearly ascertained throughout the life of the ship.

1.1.2 Local and global corrosion

The net thickness approach distinguishes between local and global corrosion. Local corrosion is defined as uniform corrosion of local structural elements, such as a single plate or stiffener. Global corrosion is defined as the average corrosion of larger areas, such as primary supporting members and the hull girder.

1.1.3 Exceptions in gross scantling

Items that are directly determined in terms of gross scantlings do not follow the net scantling approach, i.e. they already include additions for corrosion but without any owner's extra margin. Gross scantling requirements are identified with the suffix "gr" and examples are:

- Scantlings of superstructures and deckhouses as given in Ch 11, Sec 1.
- Scantlings of massive pieces made of steel forgings and steel castings.

Figure 1 : Net scantling approach scheme

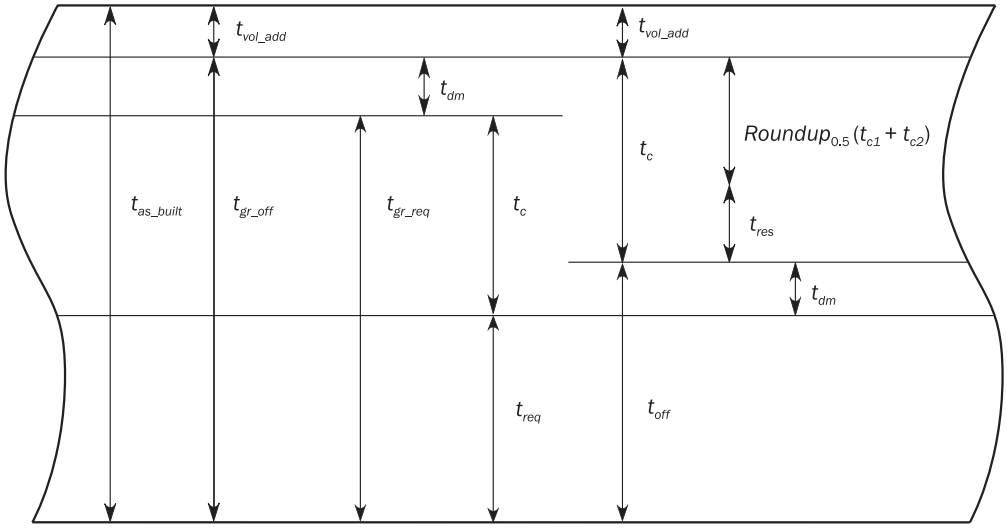

1.2 Gross and net scantling definitions

1.2.1 Gross required thickness

The gross required thickness, t_{gr_req}, is the thickness obtained by adding the corrosion addition as defined in Ch 3, Sec 3 to the net required thickness, as follows:

$$t_{gr_req} = t_{req} + t_c$$

1.2.2 Gross offered thickness

The gross offered thickness, t_{gr_off}, is the gross thickness provided at the newbuilding stage, which is obtained by deducting any thickness for voluntary addition from the as-built thickness, as follows:

$$t_{gr_off} = t_{as_built} - t_{vol_add}$$

1.2.3 Net offered thickness

The net offered thickness, t_{off}, is obtained by subtracting the corrosion addition from the gross offered thickness, as follows:

$$t_{off} = t_{gr_off} - t_c = t_{as_built} - t_{vol_add} - t_c$$

1.3 Scantling compliance

1.3.1

The net required thickness, t_{req}, is obtained by rounding the net thickness calculated according to the Rules to the nearest half millimetre. For example:

- For $10.75 \le t < 11.25$ mm, the Rule required net thickness is 11.0 mm.
- For $11.25 \le t < 11.75$ mm, the Rule required net thickness is 11.5 mm.

1.3.2

Scantling compliance in relation to the Rules is as follow:

- The net offered thickness of plating is to be equal to or greater than the net required thickness of plating.
- The required net section modulus, moment of inertia and shear area properties of local supporting members are to be calculated using the net thickness of the attached plate, web and flange. The net sectional dimensions of local supporting members are defined in Figure 2. The required section modulus and web net thickness apply to areas clear of the end brackets.
- The offered net sectional properties of primary supporting members and the hull girder are to be equal to or greater than the required net sectional properties which are to be based on the gross offered scantling with a reduction of the applicable corrosion addition, as specified in Table 1, applied to all component structural members.
- The strength assessment methods prescribed are to be assessed by applying the corrosion reduction specified in Table 1 to the offered gross scantlings. Half of the applied corrosion addition specified in Table 1 is to be deducted from both sides of the structural members being considered.
- Corrosion additions are not to be taken less than those given in Ch 3, Sec 3, [1.2].

Any additional thickness specified by the owner or the builder is not to be included when considering the compliance with the Rules.

The net cross-sectional area, the moment of inertia about the y-axis and the associated neutral axis position are to be determined applying a corrosion magnitude of 0.5 t_c deducted from the surface of the profile cross-section.

Table 1 : Assessment for corrosion applied to the gross scantlings

Structural requirement	Property/analysis type	Applied corrosion addition
Minimum thickness (all members including PSM)	Thickness	t_c
Local strength (plates, stiffeners, and hold frames)	Thickness/sectional properties	t_c
	Stiffness / proportions / Buckling capacity	t_c
Primary supporting members (prescriptive)	Sectional properties	0.5 t_c
	Stiffness/proportions of web and flange Buckling capacity	t_c
Strength assessment by FEM	Cargo tank/cargo hold	0.5 t_c
	Buckling capacity	t_c
	Local fine mesh	0.5 t_c
	Specified fine mesh areas	0.5 t_c
Hull girder strength	Sectional properties	0.5 t_c
	Buckling capacity	t_c
Hull girder ultimate strength Hull girder residual strength	Sectional properties	0.5 t_c
	Buckling/collapse capacity	0.5 t_c
Fatigue assessment (simplified stress analysis)	Hull girder section properties Local support member	0.5 t_c
Fatigue assessment (FE Stress analysis)	Coarse mesh FE model Very fine mesh portion	0.5 t_c

Figure 2 : Net sectional properties of local supporting members

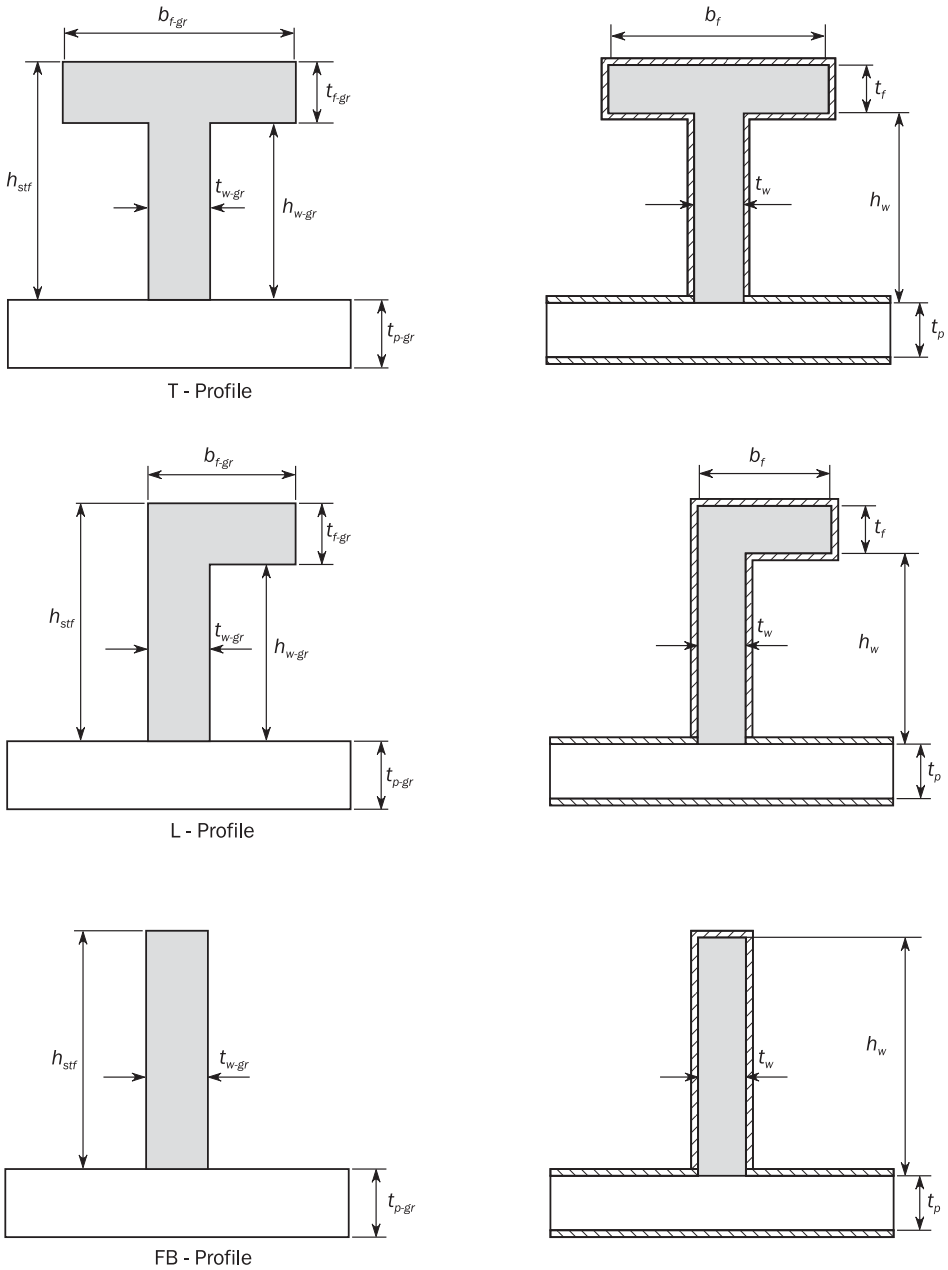

Figure 3 : Net sectional properties of local supporting members (continued)

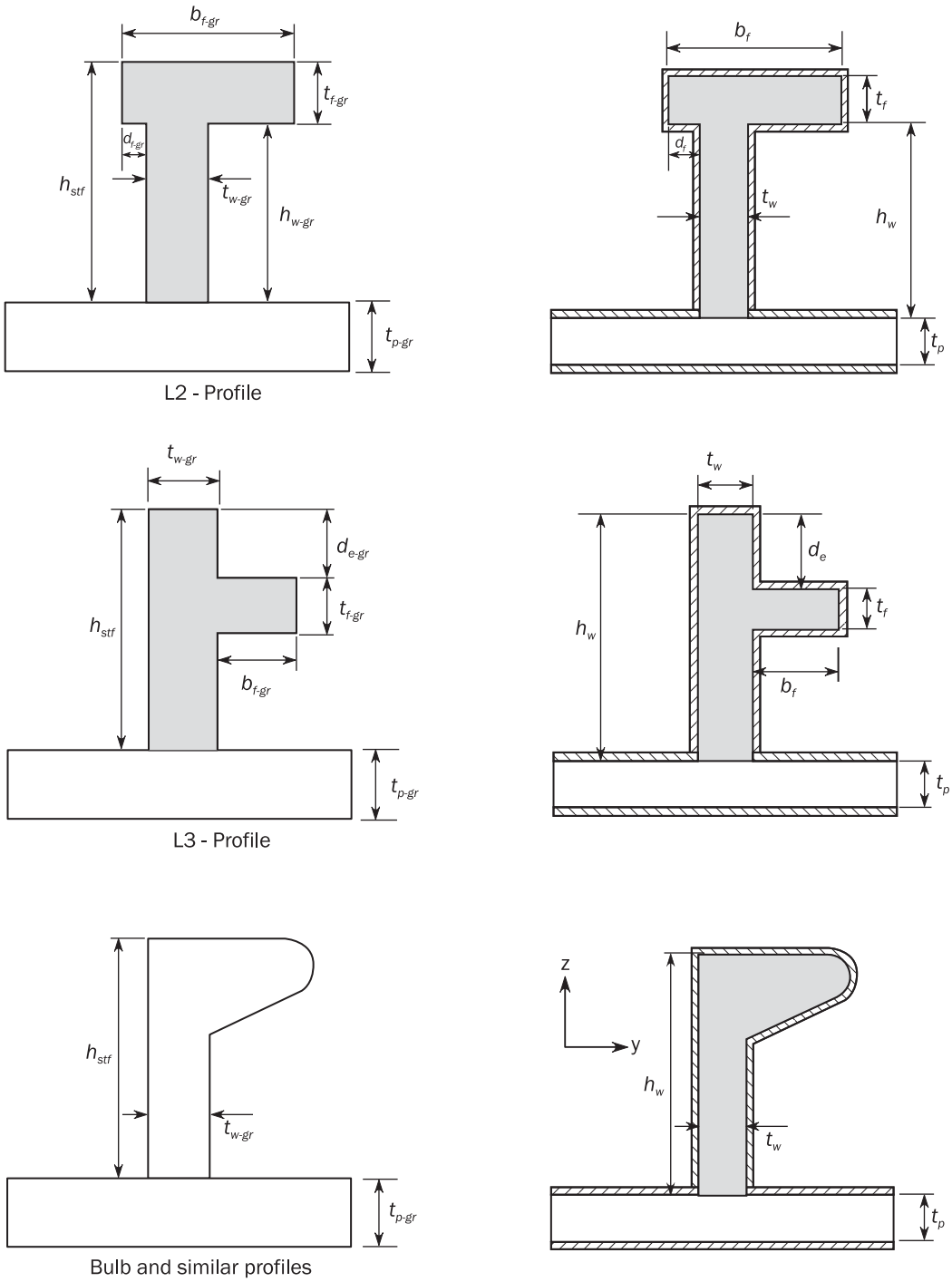

SECTION 3
CORROSION ADDITIONS

SYMBOLS

t_c : Corrosion addition, in mm.

t_{c1}, t_{c2} : Corrosion addition, in mm, on one side of the considered structural member, as defined in Table 1.

t_{res} : Reserve thickness, taken as 0.5 mm.

1 GENERAL

1.1 Applicability

1.1.1

The corrosion additions given in these Rules are applicable to carbon-manganese steels, stainless steels, stainless clad steels and aluminium alloys. Corrosion addition for the exposed carbon steel side of stainless clad structure is to be as required in Table 1 for the corresponding compartment.

The corrosion additions for other materials are to be in accordance with the requirements of the Society.

1.2 Corrosion addition determination

1.2.1

The corrosion addition for each of the two sides of a structural member, t_{c1} or t_{c2}, is specified in Table 1.

The total corrosion addition, t_c, in mm, for both sides of the structural member is obtained by the following formula:

$$t_c = Roundup_{0.5}\,(t_{c1} + t_{c2}) + t_{res}$$

For an internal member within a given compartment, the total corrosion addition, t_c is obtained from the following formula:

$$t_c = Roundup_{0.5}\,(2t_{c1}) + t_{res}$$

where t_{c1} is the value specified in Table 1 for one side exposure to that compartment.

$Roundup_{0.5}$(t) means that t is rounded to the upper half millimetre.

The total corrosion addition, t_c, in mm, for compartment boundaries and internal members made from stainless steel, or aluminium is to be taken as:

$$t_c = t_{res} = 0.5$$

In case of stainless clad steel, the corrosion additions, t_{c1}, for the carbon steel side and t_{c2}, for the stainless steel side are respectively to be taken as:

- t_{c1} as specified for the corresponding compartment in Table 1
- $t_{c2} = 0$

1.2.2 Minimum value of total corrosion addition

The total corrosion addition is not to be taken less than 2 mm except for web and face plate of stiffeners or in way of internals of dry spaces where 1.5 mm is applicable.

These minimum values of corrosion addition are not applicable to structural members made of stainless steels, stainless clad steels or aluminium alloys.

1.2.3 Stiffener

The corrosion addition of a stiffener is determined according to the location of its connection to the attached plating.

1.2.4

When a local structural member/plate is affected by more than one value of corrosion addition, the most onerous value is to be applied to the entire strake.

Table 1 : Corrosion addition for one side of a structural member

Compartment type	Structural member		t_{c1} or $tc2$		
			Oil tankers	BC-A or BC-B ships with $L \geq 150$ m	Other BC ships
Ballast water tank, bilge tank, drain storage tank, chain locker (1)	Face plate of PSM	Within 3m below top of tank (4)	2.0		
		Elsewhere	1.5		
	Other members (2) (3)	Within 3m below top of tank (4)	1.7		
		Elsewhere	1.2		
Cargo oil tank, slop tank	Face plate of PSM	Within 3m below top of tank (4)	1.7	N/A	
		Elsewhere	1.4		
	Inner-bottom plating/bottom of tank		2.1		
	Other members	Within 3m below top of tank (4)	1.7		
		Elsewhere	1.0		
Dry bulk cargo hold (5)	Transverse bulkhead	Upper part (6)	N/A	2.4	1.0
		Lower stool: sloping plate, vertical plate and top plate (7)		5.2	2.6
		Other parts		3.0	1.5
	Sloped plating of hopper tank, inner bottom plating			3.7	2.4
	Other members	Upper part (6)		1.8	1.0
		Webs and flanges of the upper end brackets of side frames of single side bulk carriers			
		Webs and flanges of lower brackets of side frames of single side bulk carriers		2.2	1.2
		Other parts		2.0	1.2
Exposed to atmosphere	Weather deck plating		1.7		
	Other members		1.0		

Compartment type	Structural member	t_{c1} or $tc2$		
		Oil tankers	BC-A or BC-B ships with $L \geq 150$ m	Other BC ships
Exposed to seawater	Shell plating between the minimum design ballast draught waterline and the scantling draught waterline	1.5		
	Shell plating elsewhere	1.0		
Fuel and lube oil tank		0.7		
Fresh water tank		0.7		
Void spaces (8)	Spaces not normally accessed, e.g. access only via bolted manhole openings, pipe tunnels, inner surface of stool space not common with a dry bulk cargo hold or ballast cargo hold, etc.	0.7		
Dry spaces	Internals of machinery spaces, pump room, store rooms, steering gear space, etc.	0.5		

(1) 1.0 mm is to be added to the plate surface within 3m above the upper surface of the chain locker bottom.

(2) 0.5 mm is to be added to the plate surface exposed to ballast for the plate boundary between water ballast and heated cargo oil tanks/slop tanks. 0.3mm is to be added to each surface of the web and face plate of a stiffener in a ballast tank and attached to the boundary between water ballast and heated cargo oil tanks or heated fuel/lube oil tanks/slop tanks. Heated oil tanks are defined as tanks/slop tanks arranged with any form of heating capability (the most common type is heating coils).

(3) 0.7 mm is to be added to the plate surface exposed to ballast for the plate boundary between water ballast and heated fuel oil or lube oil tanks.

(4) Only applicable to cargo tanks/slop tanks and ballast tanks with weather deck as the tank top. The 3 m distance is measured vertically from and parallel to the top of the tank.

(5) Dry bulk cargo hold includes holds intended for the carriage of dry bulk cargoes, which may carry water ballast.

(6) Upper part of the cargo holds correspond to an area above the connection between the topside and the inner hull or side shell. If there is no topside, the upper part corresponds to the upper one third of the cargo hold height (where a plane bulkhead is fitted in way of a dry bulk cargo hold, the upper part of the bulkhead is defined in the same manner).

(7) If there is no lower stool fitted (i.e. engine room bulkhead or fore peak bulkhead) or if a plane bulkhead is fitted, then this corrosion addition should be applied up to a height level with the opposing bulkhead stool in that hold. In the case where a stool is not fitted on the opposing bulkhead, the vertical extent of this zone is to be from the inner bottom to a height level with the top of the adjacent hopper sloping plate, but need not be taken as more than 3 m.

(8) For the determination of the corrosion addition of the outer shell plating, the pipe tunnel is considered as for a water ballast tank.

SECTION 4
CORROSION PROTECTION

1 GENERAL

1.1 Structures to be protected

1.1.1 Dedicated seawater ballast tanks

All dedicated seawater ballast tanks are to have an efficient corrosion prevention system.

1.1.2 Cargo oil tanks

Cargo oil tanks are to be protected in compliance with the requirements specified in Pt 2, Ch 2, Sec 2, [1].

1.1.3 Bulk carriers

Void double side skin spaces and cargo holds of bulk carriers are to be protected in compliance with the requirements specified respectively in Pt 2, Ch 1, Sec 2, [2.2] and Pt 2, Ch 1, Sec 2, [2.3].

1.1.4 Narrow spaces

Narrow spaces are generally to be filled by an efficient protective product, particularly at the ends of the ship where inspections and maintenance are not easily practicable due to their inaccessibility.

2 SACRIFICIAL ANODES

2.1 Attachment of anodes to the hull

2.1.1

All anodes are to be attached to the structure in such a way that they remain securely fastened both initially and during service even when it is wasted. The following methods are acceptable:

a) Steel core connected to the structure by continuous fillet welds.

b) Attachment to separate supports by bolting, provided a minimum of two bolts with lock nuts are used. However, other mechanical means of clamping may be accepted.

2.1.2

Anodes are to be attached to stiffeners or aligned in way of stiffeners on plane bulkhead plating, but they are not to be attached to the shell. The two ends are not to be attached to separate members which are capable of relative movement.

2.1.3

Where cores or supports are welded to local support members or primary supporting members, they are to be kept clear of end supports, toes of brackets and similar stress raisers. Where they are welded to asymmetrical members, the welding is to be at least 25 mm away from the edge of the web. In the case of stiffeners or girders with symmetrical face plates, the connection may be made to the web or to the centreline of the face plate, but well clear of the free edges. Generally, anodes are not to be fitted to a face plate of higher strength steel.

2.1.4 Cargo oil tanks

Cathodic protection systems, if fitted in cargo oil tanks, are to comply the requirements specified Pt 2, Ch 2, Sec 2, [1].

SECTION 5
LIMIT STATES

1 GENERAL

1.1 Limit states

1.1.1 Definition

A limit state is defined as a state beyond which the structure no longer satisfies the requirements. The following categories of limit states are relevant for structures:

- Serviceability limit state (SLS), which corresponds to conditions beyond which specified requirements are no longer met.
- Ultimate limit state (ULS), which corresponds to the maximum load carrying-capacity or, in some cases, to the maximum applicable strain or deformation, under intact (undamaged) conditions.
- Fatigue limit state (FLS), which corresponds to degradation due to effect of time varying (cyclic) loading.
- Accidental limit state (ALS), which concerns the ability of the structure to resist accident situations.

1.1.2 Serviceability limit state

Serviceability limit state, which concerns the normal use, includes:

- Local damage which may reduce the working life of the structure or affect the efficiency or appearance of structural members or non-structural elements.
- Unacceptable deformations which affect the efficient use and appearance of structural or non-structural elements or the functioning of safety equipment.

In the context of serviceability limit state, the term ‘appearance’ is concerned with such criteria as high deflection and extensive cracking, rather than aesthetics.

1.1.3 Ultimate limit state

Ultimate limit state, which corresponds to the maximum load-carrying capacity, or in some cases, the maximum applicable strain or deformation, includes:

- Attainment of the maximum resistance capacity of sections, members or connections by rupture or excessive deformations or instability (buckling).
- Excessive yielding, transforming the structure or part of it into a plastic mechanism.

1.1.4 Fatigue limit state

Fatigue limit states assess that the fatigue capacity of structural members due to cyclic loads is greater than the design fatigue life.

1.1.5 Accidental limit state

Accidental limit states are concerned with the ability of the structure to resist accident situations or abnormal events. Flooded conditions of any compartment without progression of the flooding to another compartment are considered. The limit states are concerned with the following in intact (undamaged) conditions with

accidental or abnormal loads, or in damaged conditions with environmental loads the ship meets during a limited time frame:

- The safety of life.
- Environment.
- Property (ship and cargo).

Accidental limit state includes:

- Loss of structural strength without loss of containment.
- Loss of structural strength and loss of containment.

1.2 Failure modes

1.2.1

A number of possible failure modes may be relevant for the various parts of the ship structure. For each failure mode, one or more limit states may be relevant. The failure modes to be considered for the assessment of ship structural safety with relation to the limit states are shown in Table 1.

Table 1 : Failure modes in relation to the limit states to be considered

Possible failure modes to be considered	Limit states (1)			
	SLS	ULS	FLS	ALS
Yielding	Y	Y	-	Y
Plastic collapse	-	Y	-	Y
Buckling	Y	Y	-	Y
Rupture	-	Y	-	Y
Fatigue cracking	-	-	Y	-
Brittle fracture (2)	-	-	-	-

(1) "Y" indicates that the structural assessment is to be carried out.
(2) Controlled by the material rule requirement of steel grade.

1.2.2 Yielding

The yielding failure mode is the mode in which plastic strain locally occurs in the structural members to be considered under combined in-plane and normal stresses. Local plastic strain is controlled in SLS, ULS and ALS by checking that the stresses caused in the structural members remains below a permissible value.

1.2.3 Plastic collapse

The plastic collapse failure mode usually appears in the local structural members under large lateral impact pressure. In this failure mode, permanent lateral deflection in the local structural members occurs, but does not influence the global strength. This mode is controlled in ULS and ALS by using conventional plastic design method.

1.2.4 Buckling

The buckling failure mode is the instability phenomena of structural members under compressive loads. When the stress in structural members just attains the elastic buckling stress, elastic (reversible) buckling occurs during the compressive load. This buckling failure mode is controlled in SLS. By further increasing the compressive load, stress redistribution occurs due to buckling of the weakest structural member and the stress in some structural members reaches the yield stress. This buckling failure mode with large elastic deflection is controlled in ULS or ALS. When compression is unloaded, no consequence of failure due to buckling is seen.

On the other hand, plastic (irreversible) buckling occurs when the stress in structural members exceeds the yield stress. As a result, the substantial permanent deflections due to plastic buckling appear. This irreversible buckling failure mode is controlled only in ULS or ALS for global hull girder strength.

1.2.5 Rupture

The rupture failure mode is the mode in which breaking occurs in the structural members to be considered under large tensile stress beyond the yield stress of the material. This failure mode is controlled in ULS or ALS, but the assessment of this failure mode is covered by controlling the yielding failure.

1.2.6 Brittle fracture

Brittle fracture is dependent upon the material, temperature and thickness. Therefore, this mode is controlled by the material rule requirement of steel grade.

1.2.7 Fatigue cracking

This failure mode is different from the failure modes mentioned above and is controlled in FLS.

2 CRITERIA

2.1 General

2.1.1

Criteria are prescribed in the Rules to check the relevant limit states for the various structural elements. The strength assessments included in the Rules are defined in terms of yield check, buckling check, ultimate strength check, and fatigue check as indicated in Table 2.

Table 2 : Structural assessment

Structural Elements (1)		Yielding check	Buckling check	Ultimate strength check	Fatigue check
Local Structures	Stiffeners	Y	Y	Y (2)	Y
	Plating	Y	Y	Y (3)	-
Primary supporting members		Y	Y	Y (2)	Y
Hull girder		Y	Y (4)	Y	-

(1) "Y" indicates that the structural assessment is to be carried out.
(2) The ultimate strength check is included in the buckling check.
(3) The ultimate strength check of plating is included in the yielding check formula of plating.
(4) The buckling check of stiffeners and plating taking part in hull girder strength is performed against stress due to hull girder bending moment and hull girder shear force.

2.2 Serviceability limit states

2.2.1 Hull girder

For the yielding check of the hull girder, the stress corresponds to a load at 10^{-8} probability level.

2.2.2 Plating

For the yielding check and buckling check of platings constituting a primary supporting member, the stress corresponds to a load at 10^{-8} probability level.

2.2.3 Stiffeners

For the yielding check of stiffeners, the stress corresponds to a load at 10^{-8} probability level.

2.3 Ultimate limit states

2.3.1 Hull girder

The ultimate strength of the hull girder is to be checked against the hull girder loads at 10^{-8} probability level, amplified with the partial safety factor.

2.3.2 Plating

The ultimate strength of the plating between stiffeners and primary supporting members is to be checked against the loads at 10^{-8} probability level.

2.3.3 Stiffeners

The ultimate strength of stiffeners is to be checked against the loads at 10^{-8} probability level.

2.4 Fatigue limit state

2.4.1 Structural details

The fatigue life of representative welded structural details such as connections of stiffeners and primary supporting members and free edge of bulk carrier deck plating in way of hatch corner is to be assessed from long term distribution loads based on loads at 10^{-2} probability level including the whipping-springing effects.

2.5 Accidental limit state

2.5.1 Hull girder

For bulk carriers, the yielding and ultimate strength of the hull girder in cargo hold flooded condition and in the damaged condition is to be assessed in accordance with Ch 5, Sec 1 and Ch 5, Sec 2.

The residual strength of oil tankers and bulk carriers is to be assessed according to Ch 5, Sec 3, for damages resulting from collision or grounding.

2.5.2 Double bottom structure

For bulk carriers, the double bottom structure in cargo hold flooded condition is to be assessed in accordance with Pt 2, Ch 1, Sec 3.

2.5.3 Bulkhead structure

For bulk carriers, the bulkhead structure in cargo hold flooded condition is to be assessed in accordance with Pt 2, Ch 1, Sec 3 and Pt 2, Ch 1, Sec 4.

2.5.4 Plating, stiffeners and PSM

The plating, stiffeners and PSM are to be assessed in flooded conditions in accordance with Ch 6 for yielding criteria and with Ch 8, Sec 3 for buckling criteria.

3 STRENGTH CHECK AGAINST IMPACT LOADS

3.1 General

3.1.1

Structural response against impact loads such as forward bottom slamming, bow impact and grab chocks depends on the loaded area, magnitude of loads and structural grillage.

3.1.2

The ultimate strength of structural members that constitute the grillage, i.e. platings between stiffeners and primary supporting members and stiffeners with attached plating, is to be checked against the maximum impact loads acting on them.

SECTION 6
STRUCTURAL DETAIL PRINCIPLES

SYMBOLS

For symbols not defined in this section, refer to Ch 1, Sec 4.

1 APPLICATION

1.1 General

1.1.1

If not specified otherwise, the requirements of this section apply to the hull structure except superstructures and deckhouses.

2 GENERAL PRINCIPLES

2.1 Structural continuity

2.1.1 General

Attention is to be paid to the structural continuity, in particular in the following areas:

- In way of changes in the framing system.
- At end connections of primary supporting members or ordinary stiffeners.
- In way of the transition zones between cargo hold region and fore part, aft part and machinery space.
- In way of side and end bulkheads of superstructures.

At the termination of a structural member, structural continuity is to be maintained by the fitting of suitable supporting structure.

Abrupt changes in transverse section properties of longitudinal members are to be avoided. Smooth transitions are to be provided.

2.1.2 Longitudinal members

Longitudinal members are to be arranged in such a way that continuity of strength is maintained.

Longitudinal members contributing to the hull girder longitudinal strength are to extend continuously as far as practicable towards the ends of the ship.

In particular, the structural continuity in way of longitudinal bulkheads within the cargo hold region, is to be maintained outside the cargo hold region. Large transition brackets (e.g. scarfing brackets) fitted in line with the longitudinal bulkhead are a possible means to achieve such structural continuity.

2.1.3 Primary supporting members

Primary supporting members are to be arranged in such a way that continuity of strength is maintained.

Abrupt changes of web height or cross section are to be avoided.

2.1.4 Stiffeners

Stiffeners are to be arranged in such a way that continuity of strength is maintained.

Stiffeners contributing to the hull girder longitudinal strength are to be continuous when crossing primary supporting members within the 0.4 *L* amidships and as far as practicable outside 0.4 *L* amidships.

Where stiffeners are terminated in way of large openings, foundations and partial girders, compensation is to be arranged to provide structural continuity in way of the end connection.

2.1.5 Plating

Where plates with different thicknesses are joined, the change in the as-built plate thickness is not to exceed 50% of larger plate thickness in the load carrying direction. This also applies to the strengthening by local inserts, e.g. insert plates in double bottom girders, floors and inner bottom.

2.1.6 Weld joints

Weld joints are to be avoided in areas with high stress concentration.

2.2 Local reinforcements

2.2.1 Reinforcements at knuckles

a) Knuckles are in general to be stiffened to achieve out-of-plane stiffness by fitting ordinary stiffeners or equivalent means in line with the knuckle.

b) Whenever a knuckle in a main member (shell, longitudinal bulkhead etc) is arranged, stiffening in the form of webs, brackets or profiles is to be connected to the members to which they are to transfer the load (in shear). See example of reinforcement at upper hopper knuckle in Figure 1.

c) For longitudinal shallow knuckles, closely spaced carlings are to be fitted across the knuckle, between longitudinal members above and below the knuckle. Carlings or other types of reinforcement need not be fitted in way of shallow knuckles that are not subject to high lateral loads and/or high in-plane loads across the knuckle, such as deck camber knuckles.

d) Generally, the distance between the knuckle and the support stiffening in line with the knuckle is not to be greater than 50 mm. Otherwise, fatigue analysis according to Ch 9 is to be submitted by the designer.

Figure 1 : Example of reinforcement at knuckles

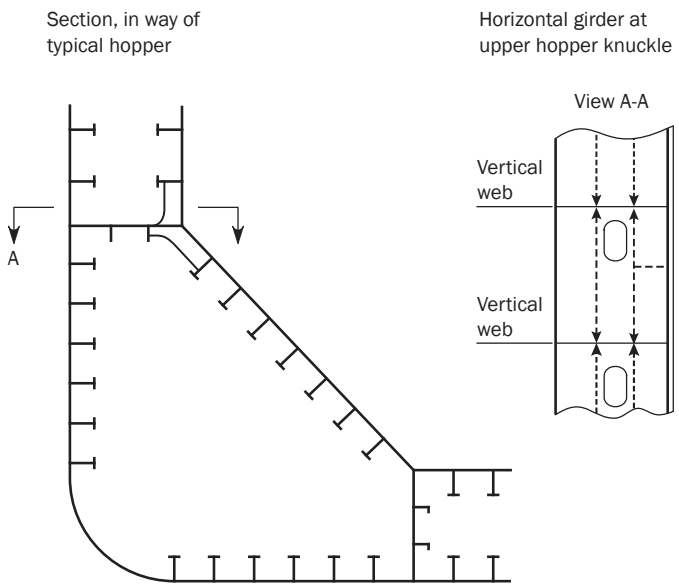

2.2.2 Reinforcement in way of attachments for permanent means of access

Local reinforcement, considering location and strength, is to be provided in way of attachments to the hull structure for permanent means of access.

2.2.3 Reinforcement of deck structure in way of concentrated loads

The deck structure is to be reinforced in way of concentrated loads, such as anchor windlass, deck machinery, cranes, masts and derrick posts.

2.2.4 Reinforcement by insert plates

Insert plates are to be made of materials with, at least, the same specified minimum yield stress and the same grade as the plates to which they are welded. See also [2.1.5].

2.3 Connection of longitudinal members not contributing to the hull girder longitudinal strength

2.3.1

Where the hull girder stress at the strength deck or at the bottom as defined in Ch 5, Sec 1, [2.2.2] is higher than the permissible stress as defined in Ch 5, Sec 1, [2.2.1] for normal strength steel, longitudinal members not contributing to the hull girder longitudinal strength and welded to the strength deck or bottom plating and bilge strake, such as longitudinal hatch coamings, gutter bars, strengthening of deck openings, bilge keel, are to be made of steel with the same specified minimum yield stress as the strength deck or bottom structure steel.

2.3.2

The requirement in [2.3.1] is also applicable to non-continuous longitudinal stiffeners welded on the web of a primary structural member contributing to the hull girder longitudinal strength such as hatch coamings, stringers and girders or on the inner bottom when the hull girder stress on those members is higher than the permissible stress as defined in Ch 5, Sec 1, [2.2.1] for normal strength steel.

3 STIFFENERS

3.1 General

3.1.1

All types of stiffeners (excluding web stiffeners) are to be connected at their ends. However, in special cases such as isolated areas of the ship where end connections cannot be applied, sniped ends may be permitted. Requirements for the various types of connections (bracketed, bracketless or sniped ends) are given in [3.2] to [3.4].

3.1.2

Where the angle between the web plate of the stiffener and the attached plating is less than 50 deg as shown on Figure 2, a tripping bracket is to be fitted. If the angle between the web plate of an unsymmetrical stiffener and the attached plating is less than 50 deg, the face plate of the stiffener is to be fitted on the side of open angle.

Figure 2 : Stiffener on attached plating with an angle less than 50 deg

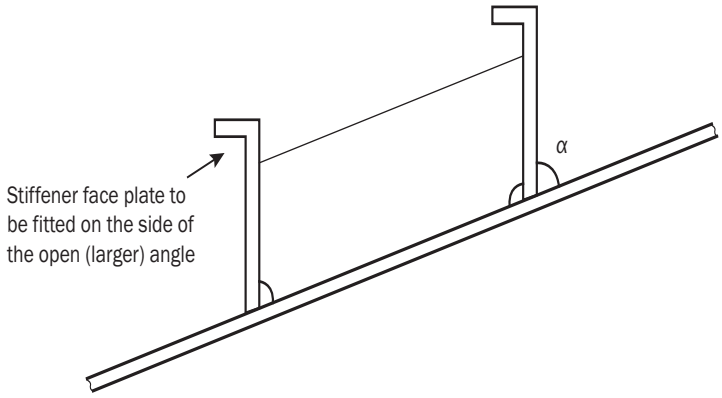

3.2 Bracketed end connections of non-continuous stiffeners

3.2.1

Where continuity of strength of longitudinal members is provided by brackets, the alignment of the brackets on each side of the primary supporting member is to be ensured, and the scantlings of the brackets are to be such that the combined stiffener/bracket section modulus and effective cross sectional area are not less than those of the member.

3.2.2

At bracketed end connections, continuity of strength is to be maintained at the stiffener connection to the bracket and at the connection of the bracket to the supporting member.

3.2.3

The arrangement of the connection between the stiffener and the bracket is to be such that at no point in the connection, is the section modulus to be less than that required for the stiffener.

3.2.4 Net web thickness

The net bracket web thickness, t_b, in mm, is to comply with the following:

$$t_b \geq (2 + f_{bkt}\sqrt{Z})\sqrt{\frac{R_{eH-stf}}{R_{eH-bkt}}}$$ and need not be greater than 13.5 mm.

where:

f_{bkt} : Coefficient taken as:

f_{bkt} = 0.2 for brackets with flange or edge stiffener.

f_{bkt} = 0.3 for brackets without flange or edge stiffener.

Z : Net required section modulus, of the stiffener, in cm^3. In the case of two stiffeners connected, Z is the smallest net required section modulus of the two connected stiffeners.

$R_{eH\text{-}stf}$: Specified minimum yield stress of the stiffener material, in N/mm^2.

$R_{eH\text{-}bkt}$: Specified minimum yield stress of the bracket material, in N/mm^2.

3.2.5 Brackets at the ends of non-continuous stiffeners

Brackets are to be fitted at the ends of non-continuous stiffeners, with arm lengths, ℓ_{bkt}, in mm, taken as:

$$\ell_{bkt} = c_{bkt}\sqrt{\frac{Z}{t_b}}$$

ℓ_{bkt} is not to be taken less than:

- $\ell_{bkt} = 1.8\ h_{stf}$ for connections where the end of the stiffener web is supported and the bracket is welded in line with the stiffener web or with offset necessary to enable welding, see item (c) in Figure 3.
- $\ell_{bkt} = 2.0\ h_{stf}$ for other cases, see items (a), (b) and (d) in Figure 3.

where:

c_{bkt} : Coefficient taken as:

$c_{bkt} = 65$ for brackets with flange or edge stiffener.

$c_{bkt} = 70$ for brackets without flange or edge stiffener.

Z : Net required section modulus, for the stiffener, in cm^3, as defined in [3.2.4].

t_b : Minimum net bracket thickness, in mm, as defined in [3.2.4].

For connections similar to item (b) in Figure 3, but not lapped, the bracket arm length is to comply with $\ell_{bkt} \geq h_{stf}$.

For connections similar to items (c) and (d) in Figure 3 where the smaller stiffener is connected to a primary supporting member or bulkhead, the bracket arm length is not to be less than two times of h_{stf}.

Figure 3 : Bracket arm length of non-continuous stiffeners

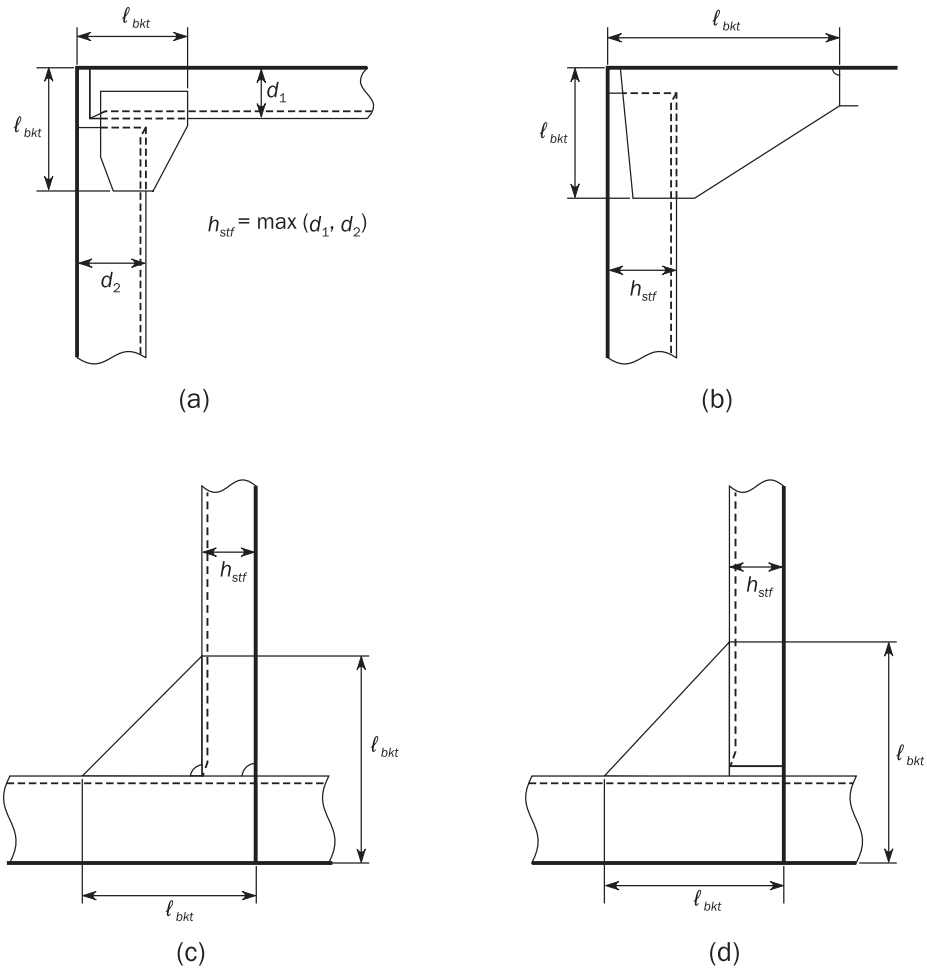

3.2.6 Brackets with different arm lengths

The lengths of the arms, measured from the plating to the toe of the bracket, are to be such that the sum of them is greater than 2 ℓ_{bkt} and each arm not to be less than 0.8 ℓ_{bkt}, where ℓ_{bkt} is as defined in [3.2.5].

3.2.7 Edge stiffening of bracket

Where an edge stiffener is required, the web height of the edge stiffener, h_w, in mm, is not to be less than:

$$h_w = 45\left(1 + \frac{Z}{2000}\right) \text{ but not less than 50 mm.}$$

where:

Z : Net section modulus, of the stiffener, in cm^3, as defined in [3.2.4].

3.3 Bracketless connections

3.3.1

The design of bracketless connections is to be such as to provide adequate resistance to rotation and displacement of the connection.

3.4 Sniped ends

3.4.1

Sniped ends may be used where dynamic loads are small, provided the net thickness of plating supported by the stiffener, t_p, is not less than:

$$t_p = c_1 \sqrt{\left(1000\ell - \frac{s}{2}\right)\frac{sPk}{10^6}}$$

where:

P : Design pressure for the stiffener for the design load set being considered, in kN/m^2.

c_1 : Coefficient for the design load set being considered, to be taken as:

c_1 = 1.2 for acceptance criteria set AC-S.

c_1 = 1.1 for acceptance criteria set AC-SD.

Sniped stiffeners are not to be used on structures in the vicinity of engines or generators in the machinery space, propeller impulse zone in the stern area nor on the shell envelope.

3.4.2

Bracket toes and sniped stiffeners ends are to be terminated close to the adjacent member. The distance is not to exceed 40 mm unless the bracket or member is supported by another member on the opposite side of the plating. Tapering of the sniped end is not to be more than 30 deg, where it is not practical to comply with this requirement, alternative arrangements are specially considered. The depth of toe or sniped end is, generally, not to exceed the thickness of the bracket toe or sniped end member, but need not be less than 15 mm.

4 PRIMARY SUPPORTING MEMBERS (PSM)

4.1 General

4.1.1

Primary supporting members web stiffeners, tripping brackets and end brackets are to comply with [4.2] to [4.4]. Where the structural arrangement is such that these requirements cannot be complied with, adequate alternative arrangement has to be demonstrated by the designer.

4.2 Web stiffening arrangement

4.2.1

Web stiffeners arranged on primary supporting members are to comply with the requirements to scantlings of such stiffeners are given in Ch 8, Sec 2, [4.2].

4.3 Tripping bracket arrangement

4.3.1

Tripping brackets (see Figure 4) are generally to be fitted:

- At positions along the member span such that it satisfies the criteria of Ch 8, Sec 2, [5.1] for tripping bracket spacing and flange slenderness.
- At the toe of end brackets.
- At ends of continuous curved face plates.
- In way of concentrated loads.
- Near the change of section.

4.3.2

Where the width of the symmetrical face plate is greater than 400 mm, backing brackets are to be fitted in way of the tripping brackets.

4.3.3

Where the face plate of the primary supporting member exceeds 180 mm on either side of the web, a tripping bracket is to support the face plate.

4.3.4 Arm length

The arm length of tripping brackets is not to be less than the greater of the following values, in m:

$d = 0.38\,b$

$$d = 0.85 b \sqrt{\frac{s_t}{t}}$$

where:

b : Height, in m, of tripping brackets, shown in Figure 4.

s_t : Spacing, in m, of tripping brackets.

t : Net thickness, in mm, of tripping brackets.

Figure 4 : Primary supporting member: Tripping bracket arrangement

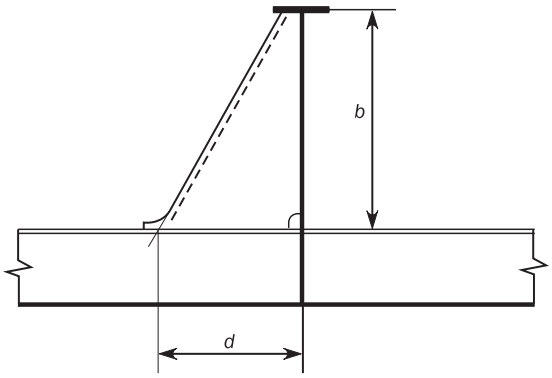

Tripping bracket in way of stiffener

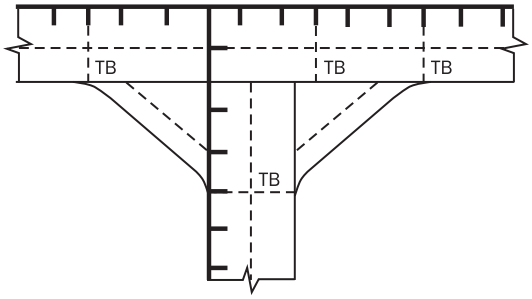

Tripping brackets at the toe of end brackets

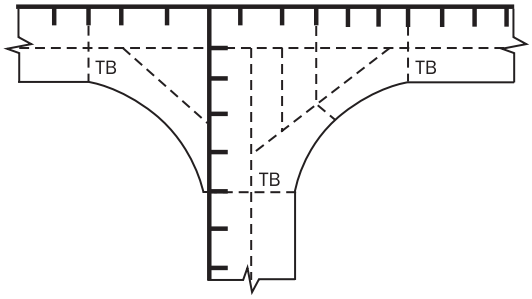

Tripping brackets at the ends of continuous curved face plates

4.4 End connections

4.4.1 General

Brackets or equivalent structure are to be provided at ends of primary supporting members.

End brackets are generally to be soft-toed.

Bracketless connections may be applied provided that there is adequate support of adjoining face plates.

4.4.2 Scantling of end brackets

In general, the arm lengths of brackets connecting PSMs, as shown in Figure 5 are not to be less than the web depth of the member, and need not be taken greater than 1.5 times the web depth.

Within the cargo hold region the thickness of the bracket is, in general, not to be less than that of the adjoining PSM web plate. Outside of the cargo hold region the thickness of the bracket is not to be less than that of the PSM web plate.

Scantlings of the end brackets are to be such that the section modulus of the PSM with end bracket, excluding face plate where it is sniped, is not to be less than that of the primary supporting member at mid-span.

The net cross sectional area, A_f, in cm^2, of face plates of brackets is not to be less than:

$A_f = \ell_b \, t_b$

where:

ℓ_b : Length of bracket edge, in m, see Figure 5. For brackets that are curved, the length of the bracket edge may be taken as the length of the tangent at the midpoint of the edge.

t_b : Minimum net bracket thickness, in mm, as defined in [3.2.4].

Moreover, the net thickness of the face plate is to be not less than that of the bracket web.

Figure 5 : Dimension of brackets

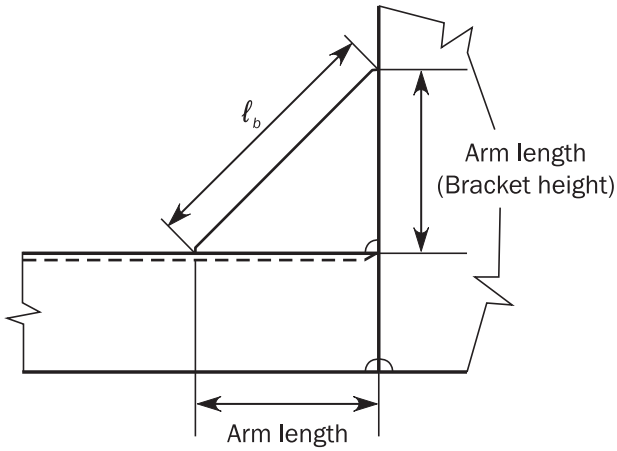

4.4.3 Arrangement of end brackets

Where the length of free edge of bracket, ℓ_b, is greater than 1.5 m, the web of the bracket is to be stiffened as follows:

- The net sectional area, in cm^2, of web stiffeners is to be not less than 16.5ℓ, where ℓ is the span, in m, of the stiffener.
- Tripping flat bars are to be fitted. Where the width of the symmetrical face plate is greater than 400 mm, additional backing brackets are to be fitted.

For a ring system where the end bracket is integral with the webs of the members and the face plate is carried continuously along the edges of the members and the bracket, the full area of the largest face plate is to be maintained close to the mid-point of the bracket and gradually tapered to the smaller face plates. Butts in face plates are to be kept well clear of the bracket toes.

Where a wide face plate abuts a narrower one, the taper is not to be greater than 1 to 4.

The toes of brackets are not to land on unstiffened plating. The toe height is not to be greater than the thickness of the bracket toe, but need not be less than 15 mm. In general, the end brackets of primary supporting members are to be soft-toed. Where primary supporting members are constructed of higher strength steel, particular attention is to be paid to the design of the end bracket toes in order to minimise stress concentrations.

Where a face plate is welded onto the edge or welded adjacent to the edge of the end bracket (see Figure 6), the face plate is to be sniped and tapered at an angle not greater than 30°.

Figure 6 : Bracket face plate adjacent to the edge

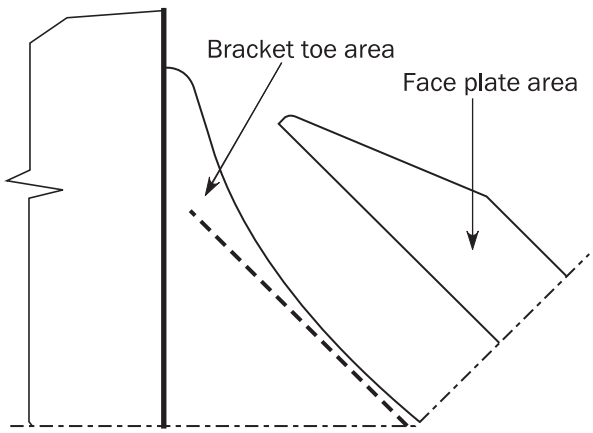

The details shown in this figure are only used to illustrate items described in the text and are not intended to represent design guidance or recommendations.

5 INTERSECTION OF STIFFENERS AND PRIMARY SUPPORTING MEMBERS

5.1 Cut-outs

5.1.1

Cut-outs for the passage of stiffeners through the web of primary supporting members, and the related collaring arrangements, are to be designed to minimise stress concentrations around the perimeter of the opening and on the attached web stiffeners.

5.1.2

The total depth of cut-outs without collar plate is to be not greater than 50% of the depth of the primary supporting member.

5.1.3

Cut-outs in way of cross tie ends and floors under bulkhead stools or in high stress areas are to be fitted with full collar plates, see Figure 7.

Figure 7 : Full collar plates

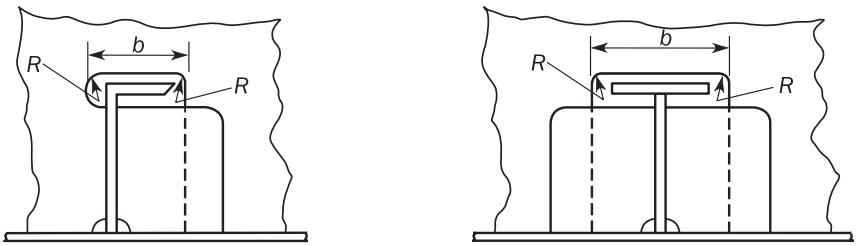

$R \geq 0.2b$ but not less than 25 mm.

5.1.4

Lug type collar plates are to be fitted in cut-outs where required for compliance with the requirements of [5.2], and in areas of high stress concentrations, e.g. in way of primary supporting member toes. See Figure 8 for typical lug arrangements.

5.1.5

At connection to shell envelope longitudinals below the scantling draught, T_{sc} and at connection to inner bottom longitudinals, a soft heel is to be provided in way of the heel of the primary supporting member web stiffeners when the calculated direct stress, σ_w, in the primary supporting member web stiffener according to [5.2] exceeds 80% of the permissible values. The soft heel is to have a keyhole, similar to that shown in item (c) in Figure 9.

A soft heel is not required at the intersection with watertight bulkheads and primary supporting members, where a back bracket is fitted or where the primary supporting member web is welded to the stiffener face plate.

When calculating the direct stress, σ_w, the bottom slamming or bow impact loads using the design pressures defined in Ch 4, Sec 5, [3.2] and Ch 4, Sec 5, [3.3] need not be applied.

5.1.6

Cut-outs are to have rounded corners and the corner radii, R, are to be as large as practicable, with a minimum of 20% of the breadth, b, of the cut-out or 25 mm, whichever is greater. The corner radii, R, does not need to be greater than 50 mm, see Figure 7. Consideration is to be given to other shapes on the basis of maintaining equivalent strength and minimising stress concentration.

Note 1: Except where specific dimensions are noted for the details of the keyhole in way of the soft heel, the details shown in this figure are only used to illustrate symbols and definitions and are not intended to represent design guidance or recommendations.

Figure 8 : Symmetric and asymmetric cut-outs

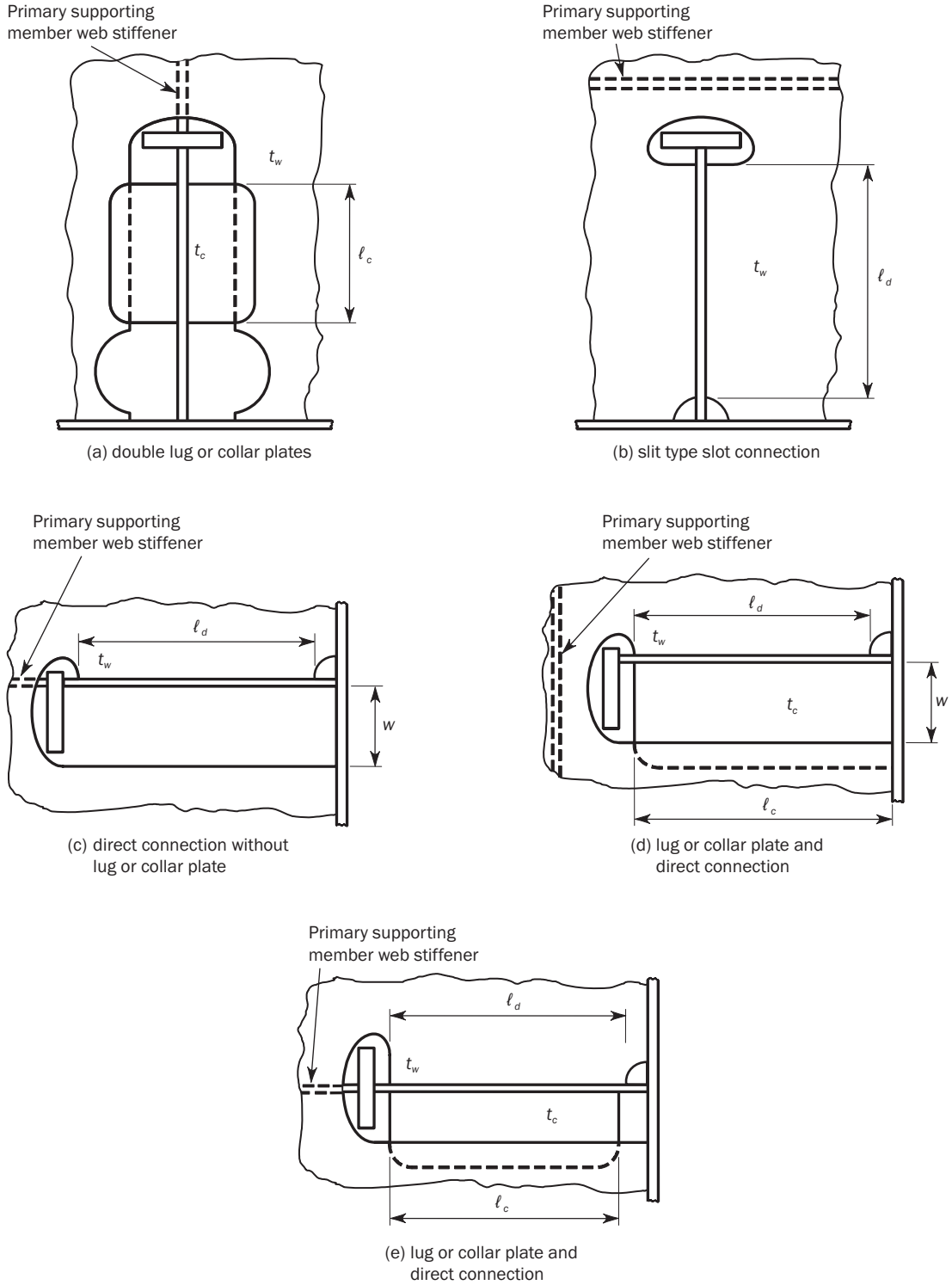

The details shown in this figure are only used to illustrate symbols and definitions and are not intended to represent design guidance.

Figure 9 : Primary supporting member web stiffener details

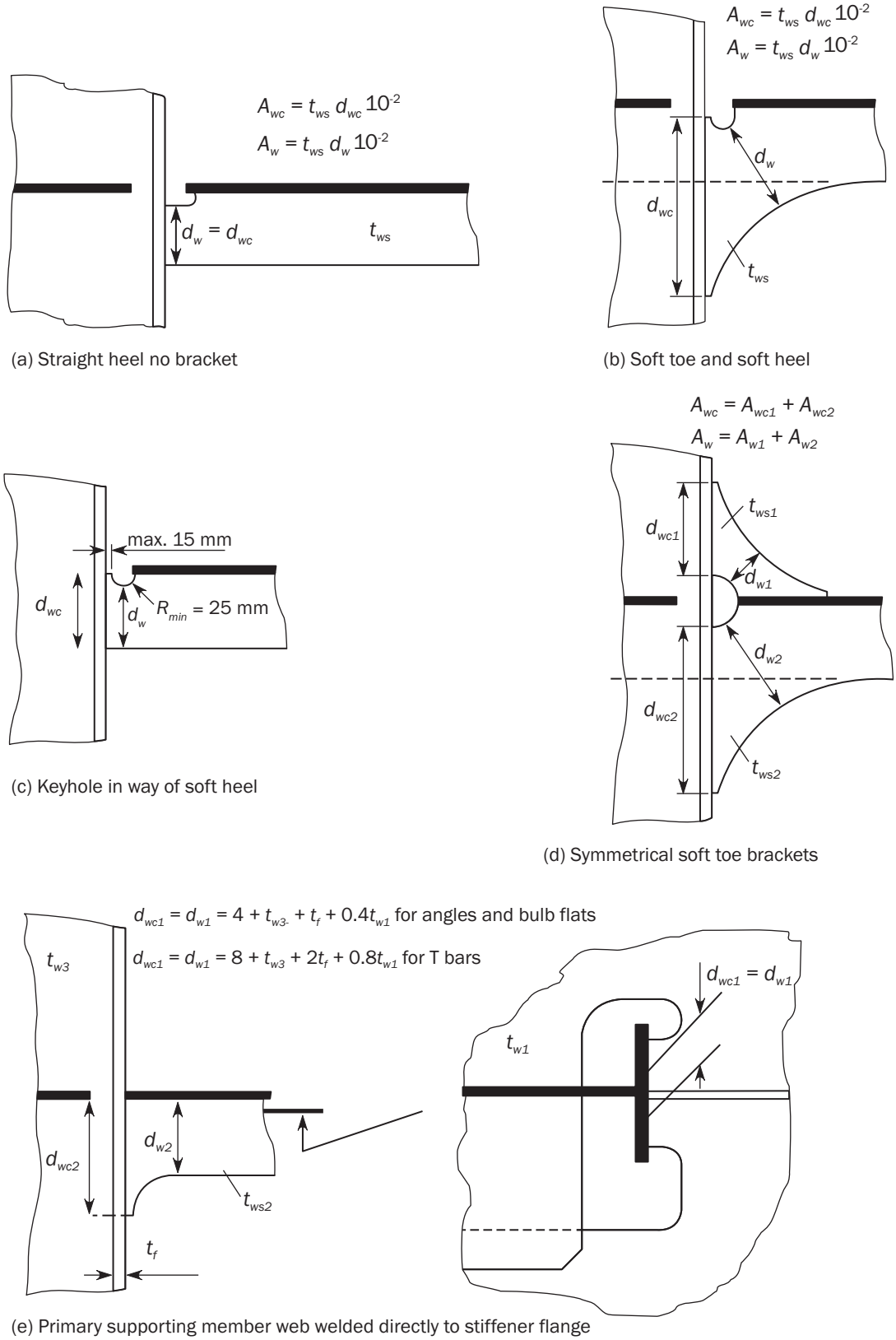

t_{ws}, t_{ws1}, t_{ws2} : Net thickness of the primary supporting member web stiffener/backing bracket, in mm.

d_w, d_{w1}, d_{w2} : Minimum depth of the primary supporting member web stiffener/backing bracket, in mm.

d_{wc}, d_{wc1}, d_{wc2} : Length of connection between the primary supporting member web stiffener/backing bracket and the stiffener, in mm.

t_f : Net thickness of the flange, in mm. For bulb profile, t_f is to be obtained as defined in Pt 1, Ch 3, Sec 7, [1.4.1].

5.2 Connection of stiffeners to PSM

5.2.1 General

For connection of stiffeners to PSM in case of lateral pressure, [5.2.2] and [5.2.3] are to be applied.

The cross sectional areas of the connections are to be determined from the proportion of load transmitted through each component in association with its appropriate permissible stress.

5.2.2

The load, W_1, in kN, transmitted through the shear connection is to be taken as follows.

- If the web stiffener is connected to the intersecting stiffener:

$$W_1 = W\left(\alpha_a + \frac{A_1}{4f_c\,A_w + A_1}\right)$$

- If the web stiffener is not connected to the intersecting stiffener:

$$W_1 = W$$

where:

W : Total load, in kN, transmitted through the stiffener connection to the PSM taken equal to:

$$W = \frac{P_1 s_1\left(S_1 - \frac{s_1}{2000}\right) + P_2 s_2\left(S_2 - \frac{s_2}{2000}\right)}{2\sin\varphi_{w1}\sin\varphi_{w2}}\,10^{-3}$$

P_1, P_2 : Design pressure applied on the stiffener for the design load set being considered, in kN/m^2, on each side of the considered connection. For bottom slamming or bow impact loads, P_1 and P_2 are the design pressure as defined in Ch 4, Sec 5, [3.2] and Ch 4, Sec 5, [3.3] respectively.

S_1, S_2 : Spacing between the considered and the adjacent PSM on each side of the considered connection, in m.

s_1, s_2 : Spacing of the stiffener, in mm, on each side of the considered connection.

α_a : Panel aspect ratio, not to be taken greater than 0.25.

$$\alpha_a = \frac{s}{1000\ S}$$

$$S = \frac{S_1 + S_2}{2}$$

$$s = \frac{s_1 + s_2}{2}$$

φ_{w1} : Angle between primary supporting member and attached plating, in deg, as defined in Ch 3, Sec 7, Symbols and Ch 10, Sec 1, Figure 5.

φ_{w2} : Angle between stiffener and attached plating, in deg, as defined in Ch 3, Sec 7, Symbols and Ch 3, Sec 7, Figure 14.

A_1 : Effective net shear area, in cm^2, of the connection, to be taken equal to:

$$A_1 = A_{1d} + A_{1c}$$

In case of a slit type slot connections area, A_1, is given by:

$$A_1 = 2\,A_{1d}$$

In case of a typical double lug or collar plate connection area, A_1, is given by:

$$A_1 = 2\,A_{1c}$$

A_{1d} : Net shear connection area, in cm^2, excluding lug or collar plate, as given by:

$A_{1d} = \ell_d\, t_w\, 10^{-2}$

ℓ_d : Length of direct connection between stiffener and PSM web, in mm.

t_w : Net web thickness of the primary supporting member, in mm.

A_{1c} : Net shear connection area, in cm^2, with lug or collar plate, given by:

$A_{1c} = f_1\, \ell_c\, t_c\, 10^{-2}$

ℓ_c : Length of connection between lug or collar plate and PSM, in mm.

t_c : Net thickness of lug or collar plate, not to be taken greater than the net thickness of the adjacent PSM web, in mm.

f_1 : Shear stiffness coefficient, taken as:

$f_1 = 1.0$, for stiffeners of symmetrical cross section.

$f_1 = 140/w$, not to be taken greater than 1.0, for stiffeners of asymmetrical cross section.

w : Width of the cut-out for an asymmetrical stiffener, measured from the cut-out side of the stiffener web, in mm, as indicated in Figure 8.

A_w : Effective net cross sectional area, in cm^2, of the PSM web stiffener in way of the connection including backing bracket where fitted, as shown in Figure 9. If the PSM web stiffener incorporates a soft heel ending or soft heel and soft toe ending, A_w is to be measured at the throat of the connection, as shown in Figure 9.

f_c : Collar load factor taken equal to:

For intersecting stiffeners of symmetrical cross section:

$f_c = 1.85$ for $A_w \le 14$
$f_c = 1.85 - 0.0441(A_w - 14)$ for $14 < A_w \le 31$
$f_c = 1.1 - 0.013(A_w - 31)$ for $31 < A_w \le 58$
$f_c = 0.75$ for $A_w > 58$

For intersecting stiffeners of asymmetrical cross section:

$$f_c = 0.68 + 0.0172\,\frac{\ell_s}{A_w}$$

ℓ_s : Connection length equal to:

For a single lug or collar plate connection to the PSM:

$\ell_s = \ell_c$

For a single sided direct connection to the PSM:

$\ell_s = \ell_d$

In the case of a lug or collar plus a direct connection:

$\ell_s = 0.5\,(\ell_c + \ell_d)$

5.2.3

The load, W_2, in kN, transmitted through the PSM web stiffener is to be taken as:

- If the web stiffener is connected to the intersecting stiffener:

$$W_2 = W\left(1 - \alpha_a - \frac{A_1}{4\, f_c\, A_w + A_1}\right)$$

- If the web stiffener is not connected to the intersecting stiffener:

$W_2 = 0$

The values of A_w, A_{wc} and A_1 are to be such that the calculated stresses satisfy the following criteria:

- For the connection to the PSM web stiffener not in way of the weld: $\sigma_w \leq \sigma_{perm}$
- For the connection to the PSM web stiffener in way of the weld: $\sigma_{wc} \leq \sigma_{perm}$
- For the shear connection to the PSM web: $\tau_w \leq \tau_{perm}$

where:

W : Load, in kN, as defined in [5.2.2].

f_c : Collar load factor as defined in [5.2.2].

α_a : Panel aspect ratio, as defined in [5.2.2].

A_1 : Effective net shear area, in cm^2, as defined in [5.2.2].

A_w : Effective net cross sectional area, in cm^2, as defined in [5.2.2].

σ_w : Direct stress, in N/mm^2, in the PSM web stiffener at the minimum bracket area away from the weld connection:

$$\sigma_w = \frac{10 W_2}{A_w}$$

σ_{wc} : Direct stress, in N/mm^2, in the PSM web stiffener in way of the weld connection:

$$\sigma_{wc} = \frac{10\ W_2}{A_{wc}}$$

τ_w : Shear stress, in N/mm^2, in the shear connection to the PSM web:

$$\tau_w = \frac{10\ W_1}{A_1}$$

A_{wc} : Effective net area, in cm^2, of the PSM web stiffener in way of the weld as shown in Figure 9.

σ_{perm} : Permissible direct stress given in Table 1 for AC-S, AC-SD and AC-I, in N/mm^2.

τ_{perm} : Permissible shear stress given in Table 1 for AC-S, AC-SD and AC-I, in N/mm^2.

5.2.4

Where a backing bracket is fitted in addition to the PSM web stiffener, it is to be aligned with the web stiffener. The arm length of the backing bracket is not to be less than the depth of the web stiffener. The net cross sectional area through the throat of the bracket is to be included in the calculation of A_w as shown in Figure 9.

5.2.5

Lapped connections of PSM web stiffeners or tripping brackets to stiffeners are not permitted in the cargo hold region.

5.2.6

Where built-up stiffeners have their face plate welded to the side of the web, a symmetrical arrangement of connection to the PSM is to be fitted. This may be achieved by fitting backing brackets on the opposite side of the PSM or bulkhead. In way of the cargo hold region, the PSM web stiffener and backing brackets are to be butt welded to the intersecting stiffener web.

5.2.7

Where the web stiffener of the PSM is parallel to the web of the intersecting stiffener, but not connected to it, the offset PSM web stiffener is to be located in close proximity to the slot edge as shown in Figure 10. The ends of the offset web stiffeners are to be suitably tapered and softened.

Locations where the web stiffener of the PSM are not connected to the intersecting stiffeners as well as the detail arrangements are to be specially considered on the basis of their ability to transmit load with equivalent effectiveness to that of [5.2.2] through [5.2.6]. Details of calculations made and/or testing procedures and results are to be submitted.

Table 1 : Permissible stresses for connection between stiffeners and PSMs

Item	Direct stress, σ_{perm}, in N/mm^2			Shear stress, τ_{perm}, in N/mm^2		
	Acceptance criteria set			Acceptance criteria set		
	AC-S	AC-SD	AC-I	AC-S	AC-SD	AC-I
PSM web stiffener	$0.83R_{eH}$ (2)	R_{eH}	R_{eH}	-	-	-
PSM web stiffener to intersecting stiffener in way of weld connection:						
• Double continuous fillet	$0.58R_{eH}$ (2)	$0.70R_{eH}$ (2)	R_{eH}	-	-	-
• Partial penetration weld	$0.83R_{eH}$ (1) (2)	R_{eH} (1)	R_{eH}	-	-	-
PSM stiffener to intersecting stiffener in way of lapped welding	$0.50R_{eH}$	$0.60R_{eH}$	R_{eH}	-	-	-
Shear connection including lugs or collar plates:						
• Single sided connection	-	-	-	$0.71\ \tau_{eH}$	$0.85\ \tau_{eH}$	τ_{eH}
• Double sided connection	-	-	-	$0.83\ \tau_{eH}$	τ_{eH}	τ_{eH}

(1) The root face is not to be greater than one third of the gross thickness of the PSM stiffener.
(2) Permissible stresses may be increased by 5 percent where a soft heel is provided in way of the heel of the PSM web stiffener.

Figure 10 : Offset PSM web stiffeners

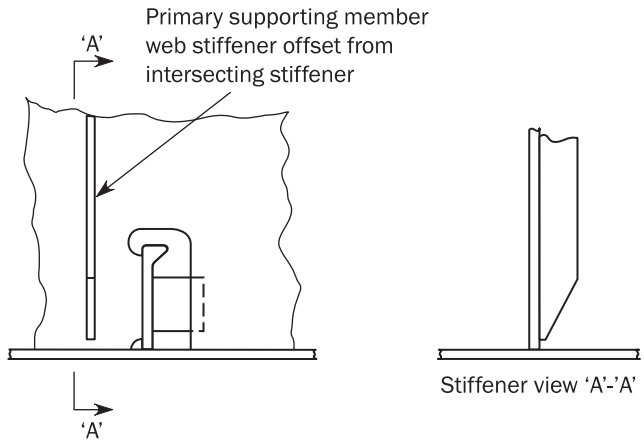

5.2.8

The size of the fillet welds is to be calculated according to Ch 12, Sec 3, [2.5] based on the weld factors given in Table 2. For the welding in way of the shear connection the size is not to be less than that required for the PSM web plate for the location under consideration.

Table 2 : Weld factors for connection between stiffeners and PSMs

Item	Acceptance criteria	Weld factor
PSM stiffener to intersecting stiffener	AC-S AC-SD AC-I	0.6 $\sigma_{wc}/\sigma_{perm}$ not to be less than 0.38
Shear connection inclusive of lug or collar plate	AC-S AC-SD AC-I	0.38
Shear connection inclusive of lug or collar plate, where the web stiffener of the PSM is not connected to the intersection stiffener	AC-S AC-SD AC-I	0.6 τ_w/τ_{perm} not to be less than 0.44

Note 1:

τ_w : Shear stress, in N/mm², as defined in [5.2.3].

σ_{wc} : Stress, in N/mm², as defined in [5.2.3].

τ_{perm} : Permissible shear stress, in N/mm², see Table 1.

σ_{perm} : Permissible direct stress, in N/mm², see Table 1.

W : Load, in kN, as defined in [5.2.2].

A_1 : Effective net shear area, in cm², as defined in [5.2.2].

A_w : Effective net cross sectional area, in cm², as defined in [5.2.2].

6 OPENINGS

6.1 Openings and scallops in stiffeners

6.1.1

Figure 11 shows examples of air holes, drain holes and scallops. In general, the ratio of a/b, as defined in Figure 11, is to be between 0.5 and 1.0. In fatigue sensitive areas further consideration may be required with respect to the details and arrangements of openings and scallops.

6.1.2

Openings and scallops are to be kept at least 200 mm clear of the toes of end brackets, end connections and other areas of high stress concentration, measured along the length of the stiffener toward the mid-span and 50 mm measured along the length in the opposite direction, see Figure 12. In areas where the shear stress is less than 60 percent of the permissible stress, alternative arrangements may be accepted.

6.1.3

Closely spaced scallops or drain holes, i.e. where the distance between scallops/drain holes is less than twice the width *b* as shown in Figure 11, are not permitted in stiffeners contributing to the longitudinal strength. For other stiffeners, closely spaced scallops/drain holes are not permitted within 20% of the stiffener span measured from the end of the stiffener. Widely spaced air or drain holes may be permitted provided that they are of elliptical shape or equivalent to minimise stress concentration and are cut clear of the welds.

Figure 11 : Examples of air holes, drain holes and scallops

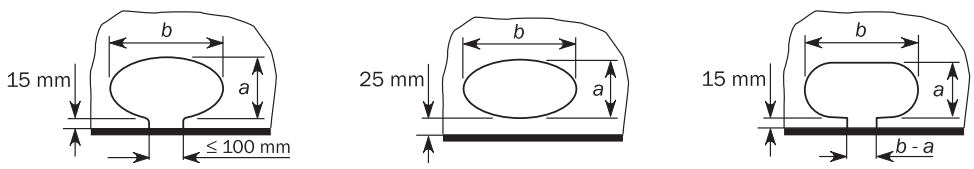

The details shown in this figure are for guidance and illustration only.

Figure 12 : Location of air and drain holes

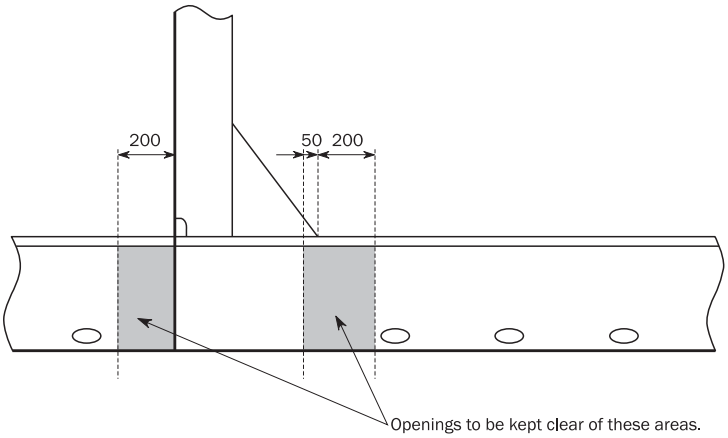

6.2 Openings in primary supporting members

6.2.1 General

Manholes, lightening holes and other similar openings are to be avoided in way of concentrated loads and areas of high shear. In particular, manholes and similar openings are to be avoided in high stress areas unless the stresses in the plating and the panel buckling characteristics have been calculated and found satisfactory.

Examples of high stress areas include:

- Vertical or horizontal diaphragm plates in narrow cofferdams/double plate bulkheads within one-sixth of their length from either end.
- Floors or double bottom girders close to their span ends.
- Primary supporting member webs in way of end bracket toes.
- Above the heads and below the heels of pillars.

Where openings are arranged, the shape of openings is to be such that the stress concentration remains within acceptable limits.

Openings are to be well rounded with smooth edges.

6.2.2 Manholes and lightening holes

Web openings as indicated below do not require reinforcement

- In single skin sections, having depth not exceeding 25% of the web depth and located so that the edges are not less than 40% of the web depth from the faceplate.
- In double skin sections, having depth not exceeding 50% of the web depth and located so that the edges are well clear of cut outs for the passage of stiffeners.

The length of openings is not to be greater than:

- At the mid-span of primary supporting members: the distance between adjacent openings.
- At the ends of the span: 25% of the distance between adjacent openings.

For openings cut in single skin sections, the length of opening is not to be greater than the web depth or 60% of the stiffener spacing, whichever is greater.

The ends of the openings are to be equidistant from the cut outs for stiffeners.

Where lightening holes are cut in the brackets, the distance from the circumference of the hole to the free flange of brackets is not to be less than the diameter of the lightening hole.

Openings not complying with this requirement are to be reinforced according to [6.2.3].

6.2.3 Reinforcements around openings

Manholes and lightening holes are to be stiffened according to this requirement, except where alternative arrangements are demonstrated as satisfactory, in accordance with the analysis methods described in Ch 7.

On members contributing to longitudinal strength, stiffeners are to be fitted along the free edges of the openings parallel to the vertical and horizontal axis of the opening. Stiffeners may be omitted in one direction if the shortest axis is less than 400 mm and in both directions if length of both axes is less than 300 mm. Edge reinforcement may be used as an alternative to stiffeners, see Figure 13.

Figure 13 : Web plate with openings

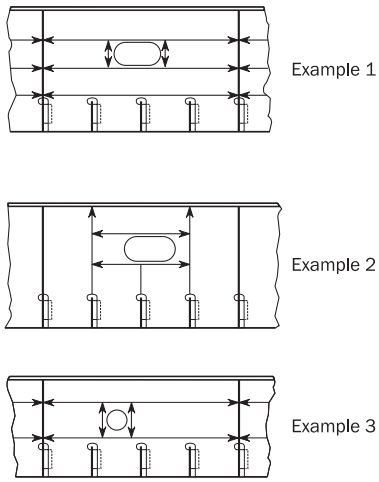

In the case of large openings in the web of PSMs (e.g. where a pipe tunnel is fitted in the double bottom), the secondary stresses in PSMs are to be considered for the reinforcement of these openings.

Where no FE analysis is performed, this may be carried out by assigning an equivalent net shear sectional area to the PSM obtained, in cm^2, according from the following formula:

$$A_{s-n50} = \frac{A_{1-n50}}{1 + \dfrac{32 l_{shr}^2 A_{1-n50}}{I_{1-n50}}} + \frac{A_{2-n50}}{1 + \dfrac{32 l_{shr}^2 A_{2-n50}}{I_{2-n50}}}$$

where:

$I_{1\text{-}n50}$, $I_{2\text{-}n50}$: Net moments of inertia, in cm^4, of deep webs (1) and (2), respectively, with attached plating around their neutral axes parallel to the plating.

$A_{1\text{-}n50}$, $A_{2\text{-}n50}$: Net shear sectional areas, in cm^2, of deep webs (1) and (2), respectively, taking account of the web height reduction by the depth of the cut out for the passage of the ordinary stiffeners, if any.

ℓ_{shr} : Shear span, in m, of deep webs (1) and (2) as defined in Ch 3, Sec 7, [1.1.2].

Deep web (1) and (2) are defined in Figure 14.

Figure 14 : Large openings in the web of primary supporting members

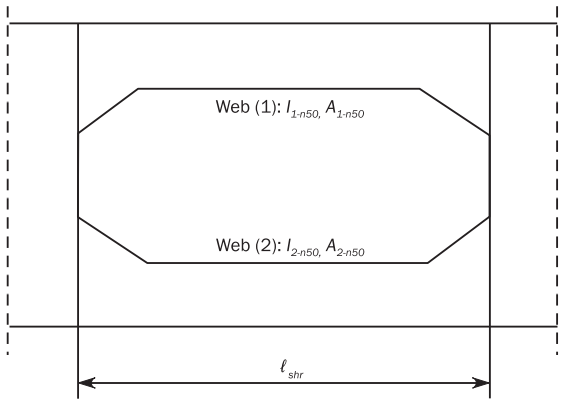

6.3 Openings in the strength deck

6.3.1 General

Openings in the strength deck are to be kept to a minimum and spaced as far as practicable from one another and from the ends of superstructures. Openings are to be located as far as practicable from high stress regions such as side shell platings, hatchway corners, or hatch side coamings.

6.3.2 Small opening location

Openings are generally to be located outside the limits as shown in Figure 15 in dashed area, defined by:

- The bent area of a rounded sheer strake, if any, or the side shell.
- $e = 0.25\ (B - b)$ from the edge of opening.
- $c = 0.07\ell + 0.1b$ or $0.25b$, whichever is greater.

where:

b : Width, in m, of the hatchway considered, measured in the transverse direction, see Figure 15.

ℓ : Width, in m, in way of the corner considered, of the cross deck strip between two consecutive hatchways, measured in the longitudinal direction, see Figure 15.

Transverse distance between the above limits and openings or between hatchways and openings as shown in Figure 15 is not to be less than:

- $g_2 = 2\ a_2$ for circular openings.
- $g_1 = a_1$ for elliptical openings.

Transverse distance between openings as shown in Figure 16 is not to be less than:

- $2\ (a_1 + a_2)$ for circular openings.
- $1.5\ (a_1 + a_2)$ for elliptical openings.

where:

a_1 : Transverse dimension of elliptical openings, or diameter of circular openings.

a_2 : Transverse dimension of elliptical openings, or diameter of circular openings.

a_3 : Longitudinal dimension of elliptical openings, or diameter of circular openings.

Longitudinal distance between openings is not to be less than:

- $(a_1 + a_3)$ for circular openings.
- $0.75\ (a_1 + a_3)$ for elliptical openings and for an elliptical opening in line with a circular one.

If the opening arrangements do not comply with these requirements, the hull girder longitudinal strength assessment is to be carried out by subtracting such opening areas, see Ch 5, Sec 1, [1.2.11].

Figure 15 : Position of openings in strength deck

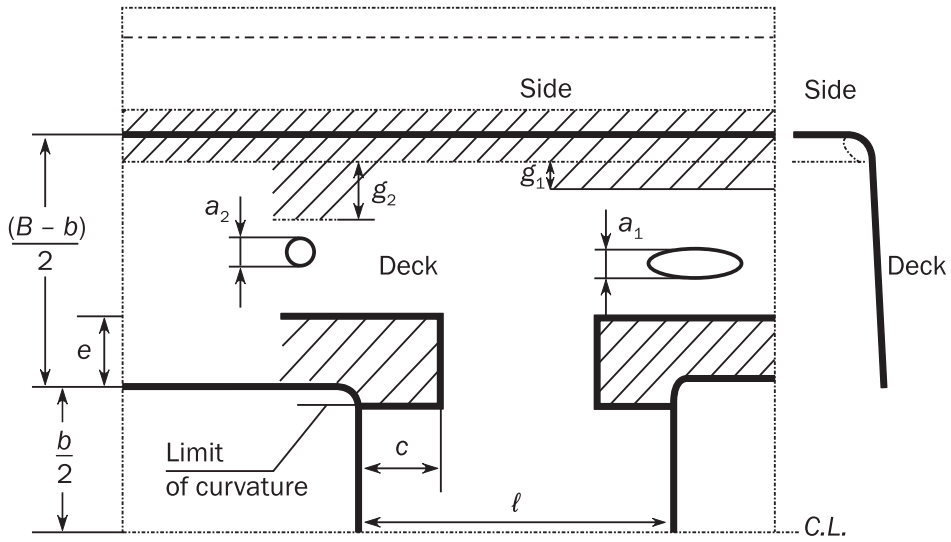

Figure 16 : Elliptical and circular openings in strength deck

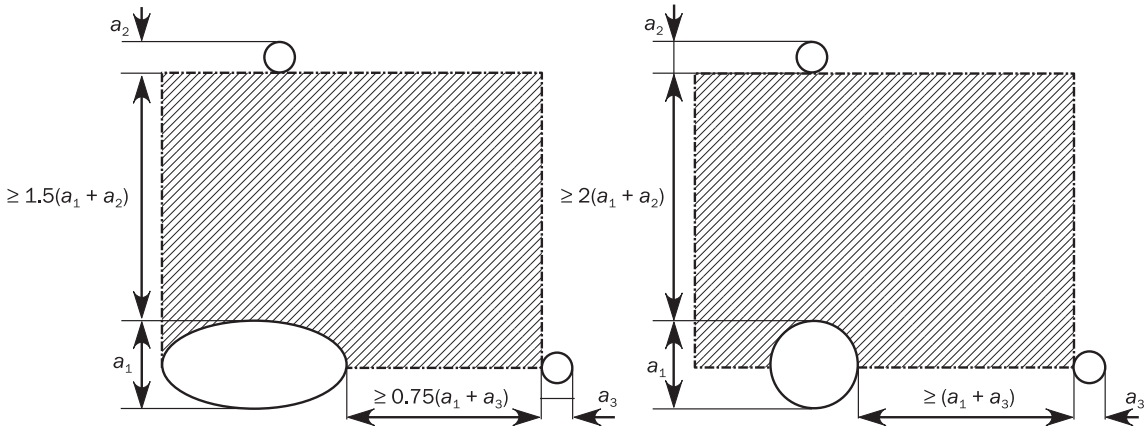

7 DOUBLE BOTTOM STRUCTURE

7.1 General

7.1.1 Framing system

For ships greater than 120 m in length, the bottom shell, the inner bottom and the sloped bulkheads of hopper tanks, if any, are to be longitudinally framed within the cargo hold region. Where it is not practicable to apply the longitudinal framing system to fore and aft parts of the cargo hold region due to the hull form, transverse framing may be accepted on a case-by-case basis subject to appropriate brackets and other arrangements being incorporated to provide structural continuity in way of changes to the framing system.

7.1.2 Variation in height of double bottom

Any variation in the height of the double bottom is to be made gradually and over an adequate length; the knuckles of inner bottom plating are to be located in way of plate floors. Where such arrangement is not possible, suitable longitudinal structures such as partial girders, longitudinal brackets, fitted across the knuckle are to be arranged.

7.1.3 Breadth of inner bottom

Breadth of inner bottom, in m, is to be measured at mid-length of the cargo hold as shown in Figure 17.

Figure 17 : Breadth of inner bottom

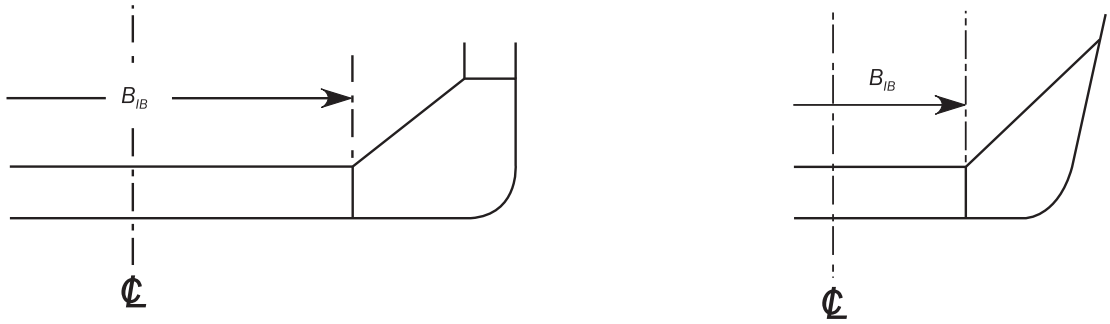

Ships with inclined slides

7.1.4 Drainage of tank top

For ships designed to carry solid cargoes, effective arrangements are to be provided for draining water from the tank top. Where wells are provided for the drainage, such wells are not to extend for more than one-half height of the double bottom.

7.1.5 Striking plate

Striking plates of adequate thickness or other equivalent arrangements are to be provided under sounding pipes to prevent the sounding rod from damaging the plating.

7.1.6 Duct keel

Where a duct keel is arranged, the centre girder may be replaced by two girders spaced, no more than 3 m apart. Otherwise, for a spacing wider than 3 m, the two girders are to be provided with support of adjacent structure and subject to the Society's approval.

The structures in way of the floors are to provide sufficient continuity of the latter.

7.2 Keel plate

7.2.1

Keel plating is to extend over the flat of bottom for the full length of the ship.

The width of the keel, in m, is not to be less than 0.8 + L/200, without being taken greater than 2.3 m.

7.3 Girders

7.3.1 Centre girder

When fitted, the centre girder is to extend within the cargo hold region and is to extend forward and aft as far as practicable. Structural continuity of the centre girder is to be maintained within the full length of the ship.

Where double bottom compartments are used for the carriage of fuel oil, fresh water or ballast water, the centre girder is to be watertight, except for the case such as narrow tanks at the end parts or when other watertight girders are provided within 0.25 B from the centreline.

7.3.2 Side girders

The side girders are to extend within the parallel part of the cargo hold region and are to extend forward and aft of the cargo hold region as far as practicable.

7.4 Floors

7.4.1 Web stiffeners

Floors are to be provided with web stiffeners in way of longitudinal ordinary stiffeners. Where the web stiffeners are not welded to the longitudinal stiffeners, design standard as given in Ch 9, Sec 6, [2] applies unless fatigue strength assessment for the cut out and connection of longitudinal stiffener is carried out.

7.5 Bilge keel

7.5.1 Material

The material of the bilge keel and ground bar is to be of the same yield stress as the material to which they are attached.

In addition, when the bilge keel extends over a length more than 0.15 *L*, the material of the bilge keel and ground bar is to be of the same grade as the material to which they are attached.

7.5.2 Design

The design of single web bilge keels is to be such that failure to the web occurs before failure of the ground bar. This may be achieved by ensuring the web thickness of the bilge keel does not exceed that of the ground bar.

Bilge keels of a different design, from that shown in Figure 18, are to be specially considered by the Society.

7.5.3 Ground bars

Bilge keels are not to be welded directly to the shell plating. A ground bar, or doubler, is to be fitted on the shell plating as shown in Figure 18 and Figure 19. In general, the ground bar is to be continuous.

The gross thickness of the ground bar is not to be less than the gross thickness of the bilge strake or 14 mm, whichever is the lesser.

Figure 18 : Bilge keel construction

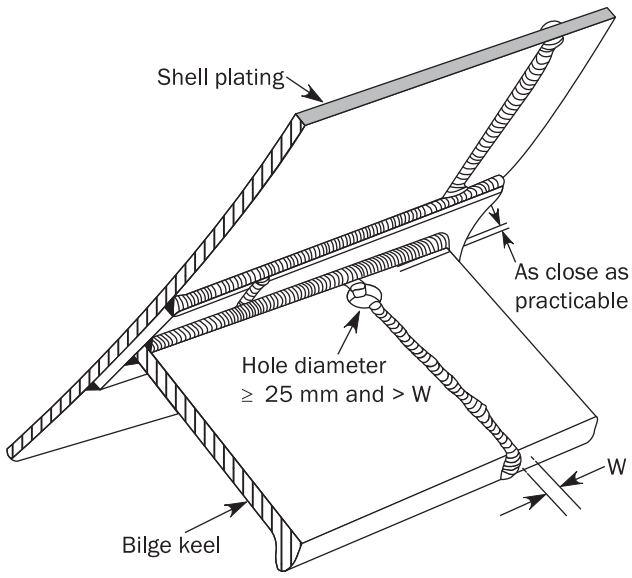

Figure 19 : Bilge keel end design

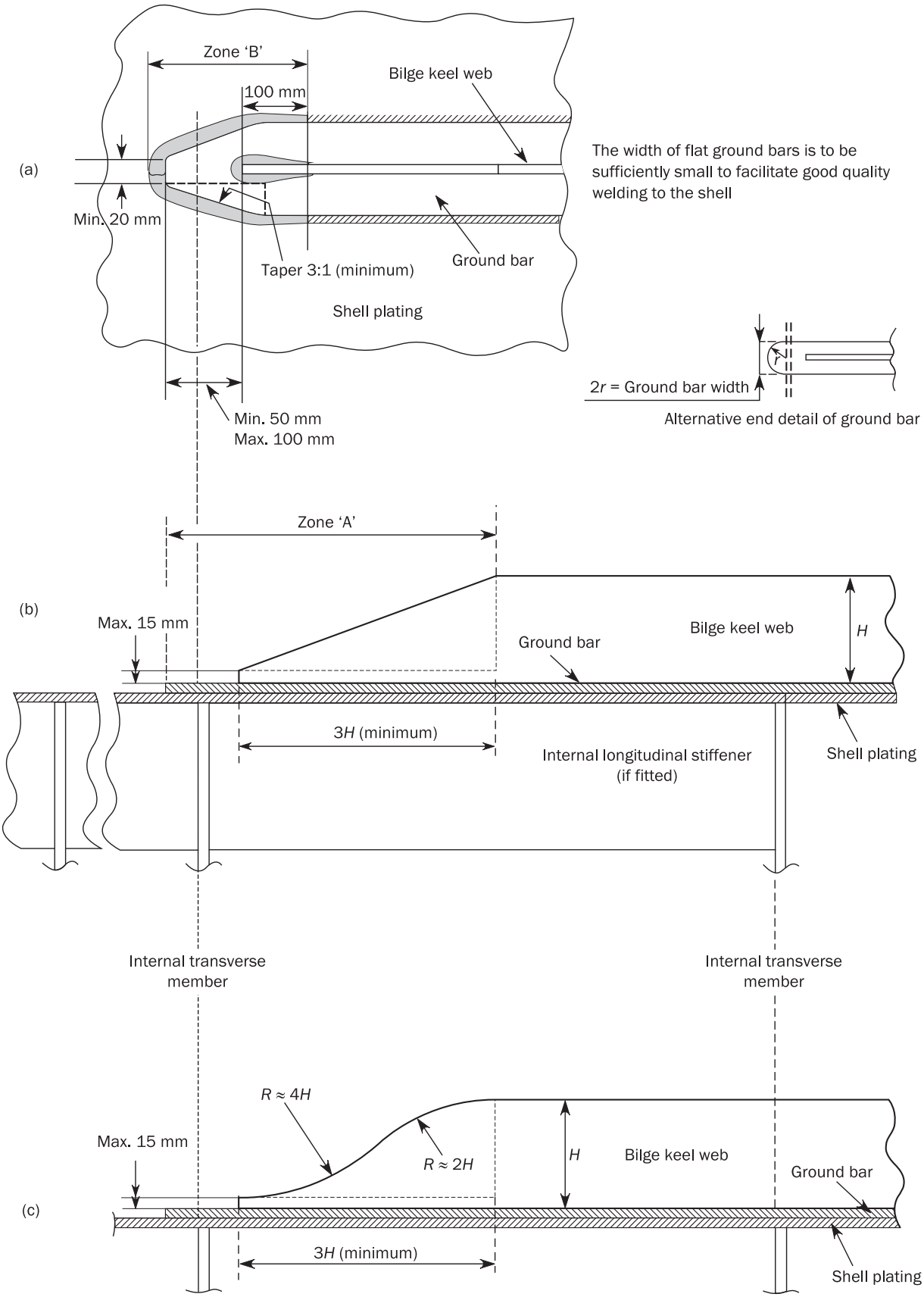

Figure 20 : Bilge keel end design (continued)

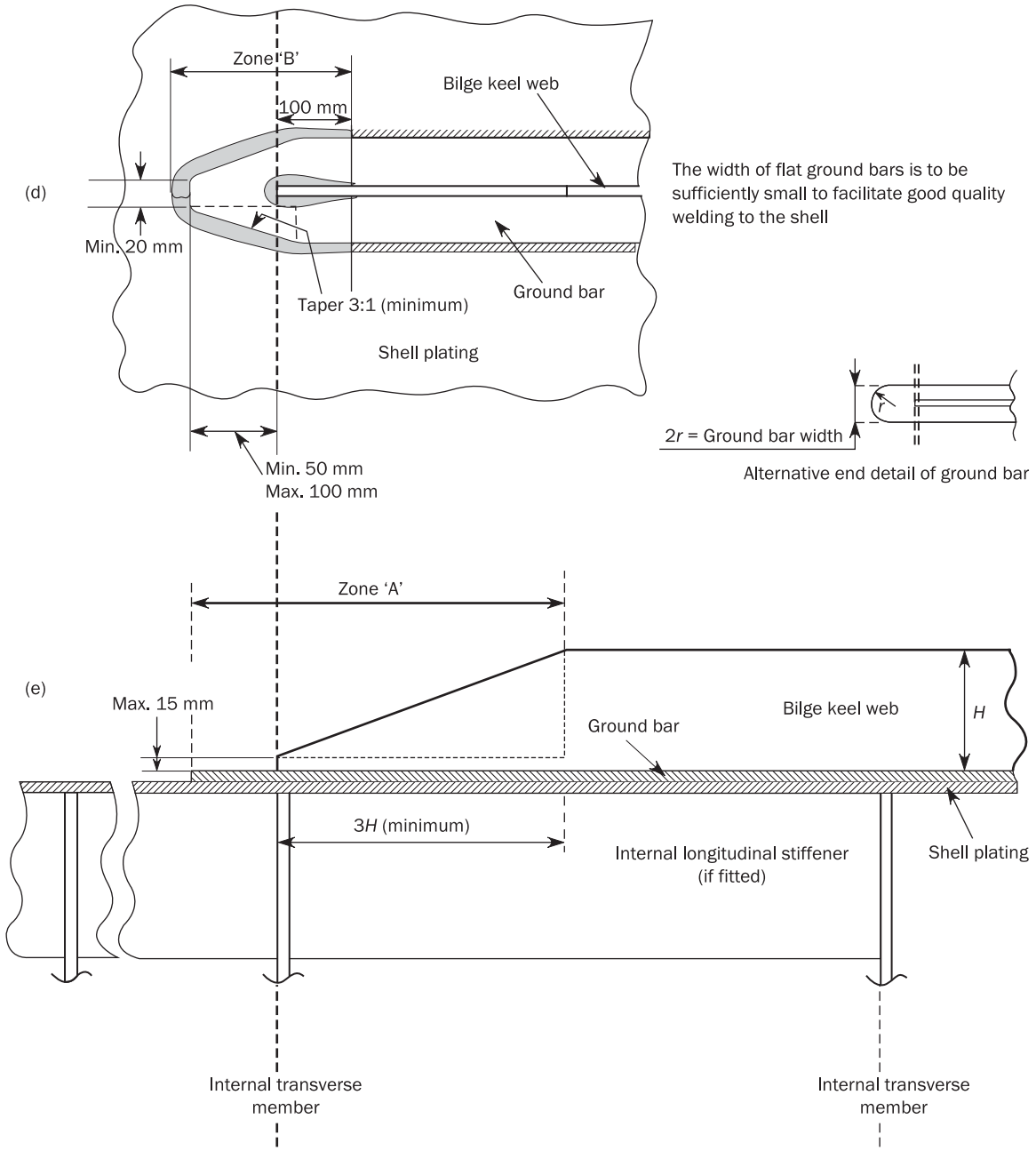

7.5.4 End details

The ground bar and bilge keel ends are to be tapered or rounded. Tapering is to be gradual with a minimum ratio of 3:1, see items (a), (b), (d) and (e) in Figure 19/Figure 20. Rounded ends are to be as shown in item (c) of Figure 19. Cut-outs on the bilge keel web, within zone 'A' (see items (b) and (e) of Figure 19/Figure 20) are not permitted.

The end of the bilge keel web is to be not less than 50 mm and not greater than 100 mm from the end of the ground bar, see items (a) and (d) of Figure 19/Figure 20.

Ends of the bilge keel and ground bar are to be supported by either transverse or longitudinal members inside the hull, as indicated as follows:

- Transverse support member is to be fitted at mid length between the end of the bilge keel web and the end of the ground bar, see items (a), (b) and (c) of Figure 19.
- Longitudinal stiffener is to be fitted in line with the bilge keel web, it is to extend to at least the nearest transverse member forward and aft of zone 'A' (see items (b) and (e) of Figure 19/Figure 20).

Alternative end arrangements may be accepted, provided that they are considered equivalent.

7.6 Docking

7.6.1 General

The drydocking arrangement itself is not covered in these Rules.

The bottom structure is to withstand the forces imposed by drydocking the ship.

7.6.2 Docking brackets

Docking brackets connecting the centreline girder to the bottom plating, are to be connected to the adjacent bottom longitudinals.

8 DOUBLE SIDE STRUCTURE

8.1 General

8.1.1

Side shell and inner hull bulkheads are generally to be longitudinally framed. Where the side shell is longitudinally framed, the inner hull bulkheads are to be longitudinally framed. Alternative framing arrangements are to be specially considered by the Society.

8.1.2

Where the double side space of bulk carriers is void, the structural members bounding this space are to be structurally designed as a water ballast tank. In such a case the corresponding air pipe is considered as extending 0.76 m above the freeboard deck at side. For corrosion addition, the space is to be considered as a void space.

8.2 Structural arrangement

8.2.1 Primary supporting members

Double side web frames are to be fitted in line with web frames in hopper tanks. In addition, double side web frames are to be aligned with web frames or large brackets in topside tanks.

Vertical primary supporting members are to be fitted in way of hatch end beams of bulk carriers or similar large deck opening supporting transverse structure.

In general, horizontal side stringers are to be fitted aft of the collision bulkhead, up to 0.2 *L* aft of the fore end, in line with fore peak stringers.

8.2.2 Transverse stiffeners

Transverse stiffeners on side shell and inner side, where fitted, are to be continuous or fitted with bracket end connections within the height of the double side. The transverse stiffeners are to be effectively connected to stringers. At their upper and lower ends, shell and inner side transverse stiffeners are to be connected by brackets to supporting stringer plates.

8.2.3 Longitudinal stiffeners

Longitudinal stiffeners on side shell and inner side, where fitted, are to be continuous within the length of the parallel part of the cargo hold region. They are to be fitted with soft toe brackets in way of transverse bulkheads aligned with cargo hold bulkheads and are to be effectively connected to transverse web frames of the double side structure.

Longitudinal framing of the side shell is to extend outside the cargo hold region as far forward as practicable.

8.2.4 Sheer strake

Sheer strakes are to have breadths not less than 0.8 + L/200 m, measured vertically, but need not be greater than 1.8 m.

The sheer strake may be either welded to the stringer plate or rounded.

If the sheer strake is rounded, its radius, in mm, is to be not less than 17 t_s, where t_s is the net thickness, in mm, of the sheer strake.

The upper edge of the welded sheer strake is to be rounded smooth and free of notches. Fixtures such as bulwarks, eye plates are not to be directly welded on the upper edge of sheer strake, except in fore and aft parts. Drainage openings with a smooth transition in the longitudinal direction may be permitted.

Longitudinal seam welds of rounded sheer strake are to be located outside the bent area at a distance not less than 5 times the maximum net thicknesses of the sheer strake.

The welding of deck fittings to rounded sheer strakes is to be avoided within 0.6 L amidships.

The transition from a rounded sheer strake to an angled sheer strake associated with the arrangement of superstructures is to be designed to avoid any discontinuities.

8.2.5 Plating connection

Connection between the inner hull plating and the inner bottom plating is to be designed such that stress concentration is avoided.

The connections of hopper tanks plating with inner hull and with inner bottom are to be supported by a primary supporting member.

9 DECK STRUCTURE

9.1 Structural arrangement

9.1.1 Framing system

Deck areas contributing to the longitudinal strength are to be longitudinally framed.

9.1.2 Stringer plate

Stringer plates are to have breadths not less than 0.8 + L/200 m, measured parallel to the deck, but need not be greater than 1.8 m.

Rounded stringer plates, where adopted, are to comply with the requirements in [8.2.4].

9.1.3 Connection of deckhouses and superstructures

Connection of deckhouses and superstructures to the strength deck are to be designed such that loads are transmitted into the under deck supporting structure.

9.2 Deck scantlings

9.2.1

The web depth of deck stiffeners is not to be less than 60 mm.

The web depth of PSMs is not to be less than 10% and 7% of the unsupported span in bending in tanks and in dry spaces, respectively, and is not to be less than 2.5 times the depth of the slots if the slots are not closed. Unsupported span in bending is the bending span as defined in Ch 3, Sec 7 or in case of a grillage structure, the distance between connections to other PSMs.

10 BULKHEAD STRUCTURE

10.1 Application

10.1.1

The requirements of this article apply to longitudinal and transverse bulkheads, which may be plane or corrugated.

10.2 General

10.2.1

The web height of vertical PSMs on bulkheads may be gradually tapered from bottom to deck.

10.2.2

Bulkheads are to be stiffened in way of deck girders.

10.2.3

Bulkheads that support girders, or pillars and longitudinal bulkheads which are fitted in lieu of girders, are to be stiffened to provide supports not less effective than required for stanchions or pillars that would be located at the same position.

10.2.4

Where bulkheads are penetrated by cargo or ballast piping, the structural arrangements in way of the connection are to be adequate for the loads imparted to the bulkheads by the hydraulic forces in the pipes.

10.3 Plane bulkheads

10.3.1 General

Plane bulkheads may be horizontally or vertically stiffened.

Horizontally framed bulkheads are made of horizontal stiffeners supported by vertical primary supporting members.

Vertically framed bulkheads are made of vertical stiffeners supported by horizontal stringers, if needed.

The bulkhead stiffener webs of hopper and topside tank watertight bulkheads are to be aligned with the webs of longitudinal stiffeners of sloping plates of inner hull.

Floors are to be fitted in the double bottom in line with the plane transverse bulkhead.

10.3.2 End connection of stiffeners

The crossing of stiffeners through a watertight bulkhead is to be watertight.

End connections of stiffeners are to be bracketed. For isolated areas of the ship where bracketed end connections cannot be applied due to hull lines, other arrangements including sniped ends are acceptable.

10.3.3 Sniped end of stiffener

Sniped ends may be used on bulkheads subject to hydrostatic pressure provided they comply with [3.4].

10.4 Corrugated bulkheads

10.4.1 General

For ships of 18 m moulded depth and above, the transverse vertically corrugated watertight bulkheads are to be fitted with a lower stool, and generally with an upper stool below deck. For ships of 16 m moulded depth and above, the transverse vertically corrugated watertight bulkheads subject to liquid pressure, e.g. tank bulkheads and ballast hold bulkheads, are to be fitted with a lower stool, and generally with an upper stool below deck. Otherwise corrugations may extend from inner bottom to deck.

10.4.2 Construction

The main dimensions $b_{f\text{-}cg}$, R, $b_{w\text{-}cg}$, d_{cg}, t_f, t_w, s_{cg} of corrugated bulkheads are defined in Figure 21.

The corrugation angle ϕ is not to be less than 55°.

When welds in a direction parallel to the bend axis are provided in the zone of the bend, the welding procedures are to be submitted to the Society for approval.

Figure 21 : Dimensions of a corrugated bulkhead

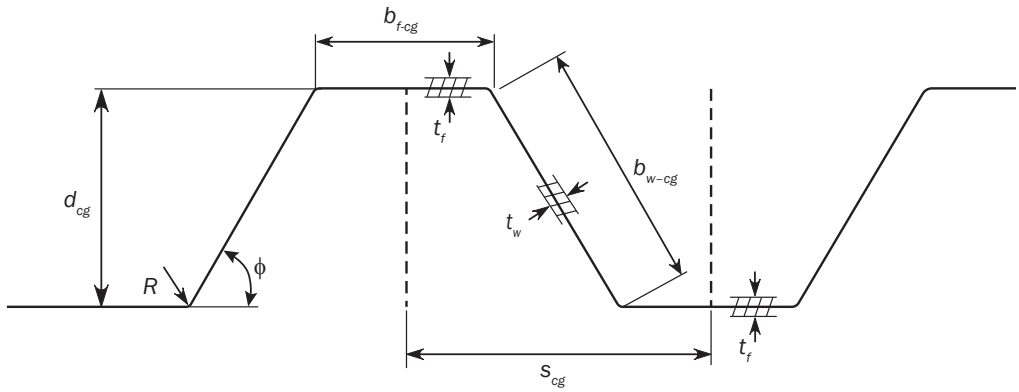

10.4.3 Corrugated bulkhead depth

The depth of the corrugation, d_{cg}, in mm, is not to be less than:

$$d_{cg} = \frac{1000\,\ell_c}{C}$$

where:

ℓ_c : Mean span of considered corrugation, in m, as defined in [10.4.5].

C : Coefficient to be taken as:

C = 15 for tank and water ballast cargo hold bulkheads.

C = 18 for dry cargo hold bulkheads.

10.4.4 Actual section modulus of corrugations

The net section modulus of a corrugation may be obtained, in cm^3, from the following formula:

$$Z = \left[\frac{d_{cg}(3b_{f-cg}t_f + b_{w-cg}t_w)}{6}\right] 10^{-3}$$

where:

t_f, t_w : Net thickness of the plating of the corrugation, in mm, shown in Figure 21.

d_{cg}, $b_{f\text{-}cg}$, $b_{w\text{-}cg}$:Dimensions of the corrugation, in mm, shown in Figure 21.

Where the web continuity is not ensured at ends of the bulkhead, the net section modulus of a corrugation is to be obtained, in cm^3, from the following formula:

$Z = 0.5 b_{f-cg} t_f d_{cg} \; 10^{-3}$

10.4.5 Span of corrugations

The span ℓ_C of the corrugations is to be taken as the distance shown in Figure 22.

For the definition of ℓ_C, the bottom of the upper stool is not to be taken more than a distance from the deck at the centre line equal to:

- 3 times the depth of corrugation, for non rectangular stool.
- 2 times the depth of corrugation, for rectangular stool.

Figure 22 : Span of the corrugations

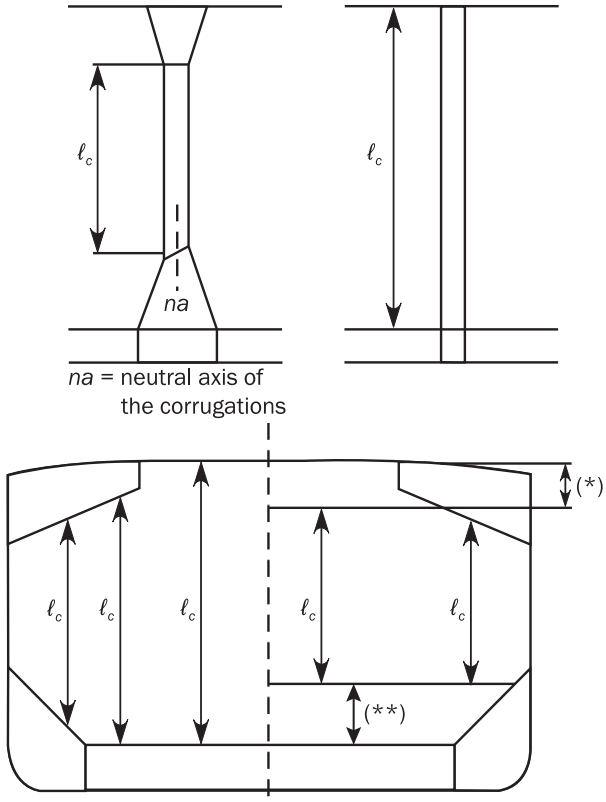

(*) upper stool height
(**) lower stool height

10.4.6 Structural arrangements

Where corrugated bulkheads are cut in way of primary supporting members, corrugations on each side of the primary member are to be aligned with each other.

10.4.7 Bulkhead end supports

The strength continuity of corrugated bulkheads is to be maintained at the ends of corrugations.

Where a bulkhead is provided with a lower stool, floors or girders are to be fitted in line with both sides of the lower stool. Where a bulkhead is not provided with a lower stool, floors or girders are to be fitted in line with both flanges of the vertically corrugated transverse bulkhead.

The supporting floors or girders are to be connected to each other by suitably designed shear plates.

At deck, if no upper stool is fitted, transverse or longitudinal stiffeners are to be fitted in line with the corrugation flanges.

When the corrugation flange connected to the adjoining boundary structures (i.e. inner hull, side shell, longitudinal bulkhead, trunk, etc) is smaller than 50% of the width of the typical corrugation flange, an advanced analysis of the connection is required.

10.4.8 Bulkhead stools

Stool side plating is to be aligned with the corrugation flanges.

10.4.9 Lower stool

The lower stool, when fitted, is to have a height in general not less than:

- 3 corrugation depths, for bulk carriers.
- One corrugation depth, for oil tankers.

The ends of stool side ordinary stiffeners, when fitted in a vertical plane, are to be attached to brackets at the upper and lower ends of the stool. Lower stool side vertical stiffeners and their brackets in the stool are to be aligned with the inner bottom structures such as longitudinals or similar. Lower stool side plating is not to be knuckled anywhere between the inner bottom plating and the stool top plate.

The distance *d* from the edge of the stool top plate to the surface of the corrugation flange is to be in accordance with Figure 23.

The lower part of the stool side plates is to be in line with double bottom floors or girders as the case may be, and the stool bottom is to have a width not less than:

- 2.5 corrugation depths, for bulk carriers.
- One corrugation depth, for oil tankers.

The stool is to be fitted with diaphragms in line with the longitudinal double bottom girders or floors. Scallops in the brackets and diaphragms in way of the connections to the stool top plate are to be avoided.

The stool side plating is to be connected to the stool top plate and the inner bottom plating by either full penetration or partial penetration welds. The supporting floors are to be connected to the inner bottom by either full penetration or partial penetration welds.

Figure 23 : Permitted distance, *d*, from the edge of the stool top plate to the surface of the corrugation flange

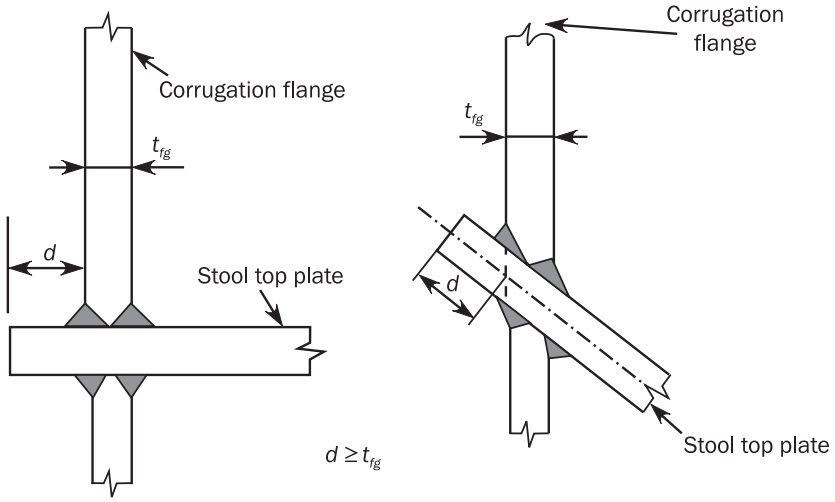

10.4.10 Upper stool

The upper stool, when fitted, is to have a height:

- Not less than two times the corrugation depth, for bulk carriers.
- At least one corrugation depth, for oil tankers.

Rectangular stools are to have a height in general equal to twice the depth of corrugations, measured from the deck level and at the hatch side girder or at the inner hull as applicable. Brackets or deep webs are to be fitted to connect the upper stool to the deck transverse or hatch end beams.

The upper stool of a transverse bulkhead is to be properly supported by deck girders or deep brackets between the adjacent hatch end beams. The width of the upper stool bottom plate is generally to be the same as that of the lower stool top plate. The stool top of non-rectangular stools of bulk carriers is to have a width not less than twice the depth of corrugations. The ends of stool side ordinary stiffeners when fitted in a vertical plane, are to be attached to brackets at the upper and lower end of the stool.

The stool is to be fitted with diaphragms in line with and effectively attached to longitudinal deck girders extending to the hatch end coaming girders or transverse deck primary supporting members. Scallops in the brackets and diaphragms in way of the connection to the stool bottom plate are to be avoided.

10.5 Non-tight bulkheads

10.5.1 General

In general, openings in wash bulkheads are to have generous radii and their aggregate area is not to be less than 10% of the area of the bulkhead. The area of non-tight bulkhead is the whole cross sectional area in one plane that covers the tank boundaries.

10.5.2 Non-tight bulkheads not acting as pillars

In general, the maximum spacing of stiffeners fitted on non-tight bulkheads not acting as pillars is to be:

- 0.9 m, for transverse bulkheads.
- Two frame spacings, with a maximum of 1.5 m, for longitudinal bulkheads.

The net thickness of bulkhead stiffener, in mm, is not to be less than:

$t = 3 + 0.015\, L_2$

The depth of bulkhead stiffener of flat bar type is in general not to be less than 1/12 of stiffener length.

A smaller depth of stiffener may be accepted based on calculations showing compliance with Ch 6, Sec 5 and Ch 8.

10.5.3 Non-tight bulkheads acting as pillars

Non-tight bulkheads acting as pillars are to be provided with bulkhead stiffeners with a maximum spacing equal to:

- Two frame spacings, when the frame spacing does not exceed 0.75 m.
- One frame spacing, when the frame spacing is greater than 0.75 m.

Where non-tight bulkheads are corrugated, the depth of the corrugation is not to be less than 100 mm.

Each vertical stiffener, in association with a width of plating equal to 35 times the plating net thickness, 1/12 of stiffener length or the stiffener spacing, whichever is the smaller, is to comply with the applicable requirements in Ch 6, for the load being supported.

10.6 Watertight bulkheads of trunks and tunnels

10.6.1

Watertight trunks, tunnels, duct keels and ventilators are to be of the same strength as watertight bulkheads at corresponding levels. The means used for making them watertight, and the arrangements adopted for closing openings in them, are to be to the satisfaction of the Society.

11 PILLARS

11.1 General

11.1.1

Pillars are to be fitted in the same vertical line wherever possible. If not possible, effective means are to be provided for transmitting their loads to the supports below. Effective arrangements are to be made to distribute the load at the heads and heels of all pillars. Where pillars support eccentric loads, they are to be strengthened for the additional bending moment imposed upon them.

11.1.2

Pillars are to be provided in line with the double bottom girder or as close thereto as practicable, and the structure above and below the pillars is to be of sufficient strength to provide effective distribution of the load. Where pillars connected to the inner bottom are not located in way of the intersection of floors and girders, partial floors or girders or equivalent structures are to be fitted as necessary to support the pillars.

11.1.3

Pillars provided in tanks are to be of solid or open section type.

Where the hydrostatic pressure may result in tensile stresses in the pillar, the tensile stress in the pillar and its end connections is not to exceed 45% of the specified minimum yield stress of the material.

11.2 Connections

11.2.1

Heads and heels of pillars are to be secured by thick doubling plates and brackets as necessary. Alternative arrangements for doubling plates may be accepted, provided that they are considered equivalent as deemed appropriate by the Society. Where the pillars are likely to be subjected to tensile loads, the head and heel of pillars are to be efficiently secured to withstand the tensile loads and the doubling plates replaced by insert plate.

The net thickness of doubling plates, when fitted, is to be not less than 1.5 times the net thickness of the pillar. Pillars are to be attached at their heads and heels by continuous welding.

SECTION 7
STRUCTURAL IDEALISATION

SYMBOLS

Symbols

For symbols not defined in this section, refer to Ch 1, Sec 4.

φ_w : Angle, in deg, between the stiffener or primary supporting member web and the attached plating, see Figure 14 for stiffener and Ch 10, Sec 1, Figure 5 for primary supporting member. φ_w is to be taken equal to 90 deg if the angle is greater than or equal to 75 deg.

ℓ_{bdg} : Effective bending span, in m, as defined in [1.1.2] for stiffeners and [1.1.6] for primary supporting members.

ℓ_{shr} : Effective shear span, in m, as defined in [1.1.3] for stiffeners and [1.1.7] for primary supporting members.

ℓ : Full length of stiffener or of primary supporting member, in m, between their supports.

s : Stiffener spacing, in mm, as defined in [1.2].

S : Primary supporting member spacing, in m, as defined in [1.2].

a : Length, in mm, of EPP as defined in [2.1.1].

b : Breadth, in mm, of EPP as defined in [2.1.1].

h_{stf} : Stiffener height, including the face plate, in mm.

t_p : Net thickness of attached plate, in mm.

t_w : Net web thickness, in mm. For bulb profiles, see [1.4.1].

b_f : Breadth of flange, in mm, see Ch 3, Sec 2, Figure 2. For bulb profiles, see [1.4.1].

t_f : Net thickness of flange, in mm.

PSM : Primary Supporting Member.

EPP : Elementary Plate Panel.

LCP : Load Calculation Point.

1 STRUCTURAL IDEALISATION OF STIFFENERS AND PRIMARY SUPPORTING MEMBERS

1.1 Effective spans

1.1.1 General

Where arrangements differ from those defined in this article, span definition may be specially considered.

1.1.2 Effective bending span of stiffeners

The effective bending span ℓ_{bdg} of stiffeners is to be measured as shown in Figure 1 for single skin structures and Figure 2 for double skin structures.

If the web stiffener is sniped at the end or not attached to the stiffener under consideration, the effective bending span is to be taken as the full length between PSMs unless a backing bracket is fitted, see Figure 1.

The effective bending span may be reduced where brackets are fitted to the flange or free edge of the stiffener. Brackets fitted on the side opposite to that of the stiffener with respect to attached plating are not to be considered as effective in reducing the effective bending span.

In single skin structures, the effective bending span of a stiffener supported by a bracket or by a web stiffener on one side only of the primary supporting member web, is to be taken as the total span between primary supporting members as shown in item (a) of Figure 1. If brackets are fitted on both sides of the primary supporting member, the effective bending span is to be taken as in items (b), (c) and (d) of Figure 1.

Figure 1 : Effective bending span of stiffeners supported by web stiffeners (single skin construction)

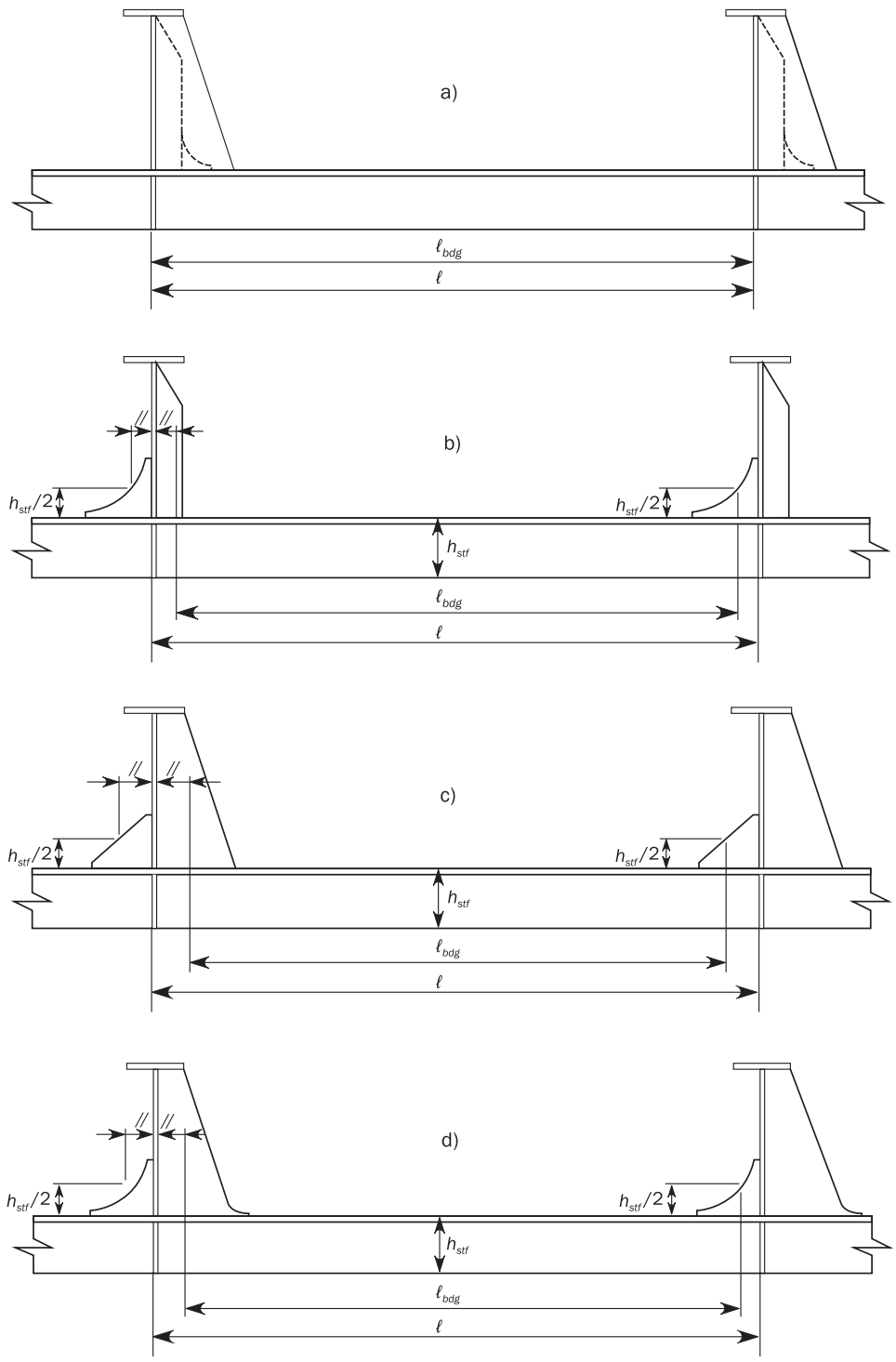

Figure 2 : Effective bending span of stiffeners supported by web stiffeners (double skin construction)

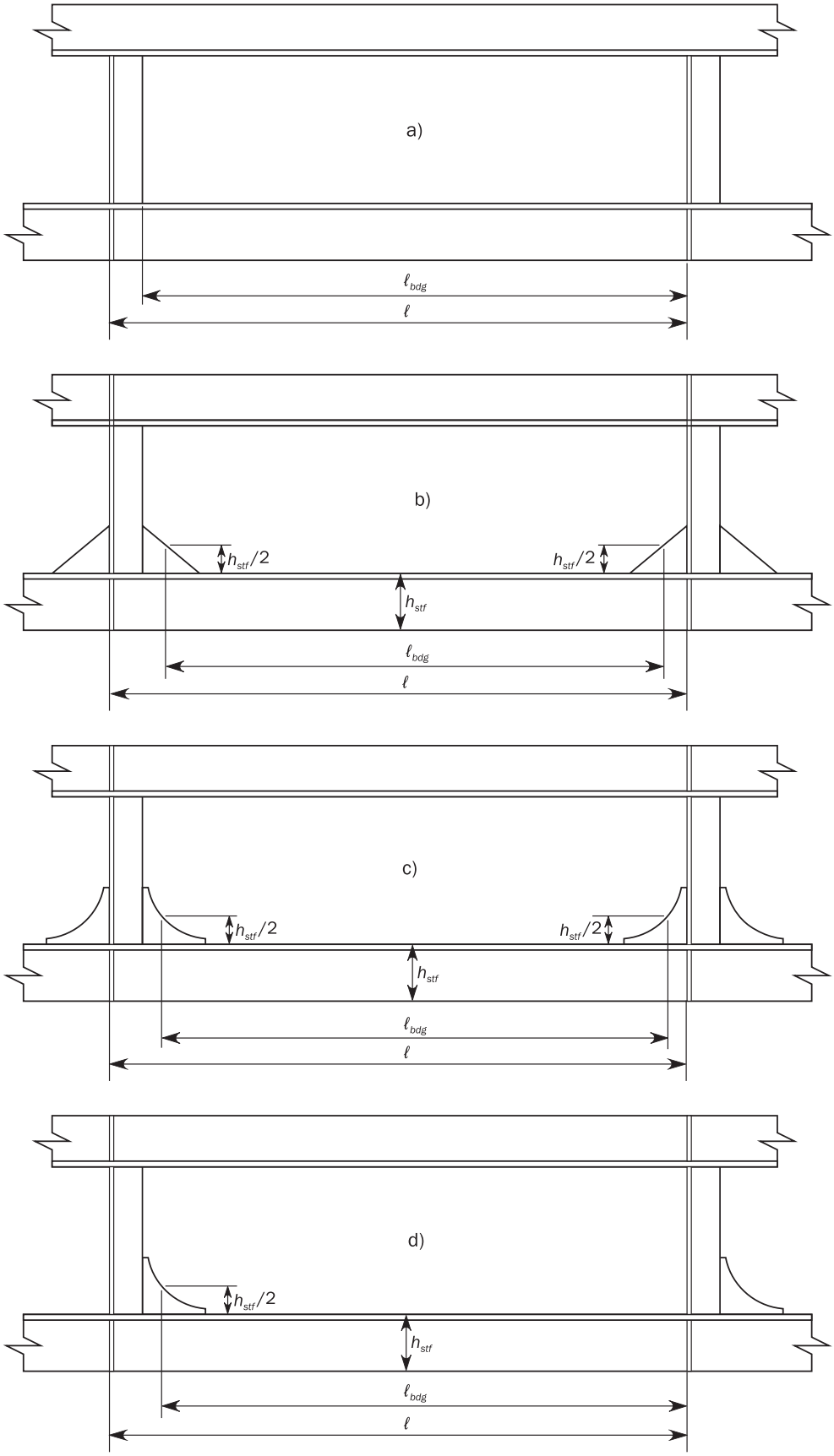

Where the face plate of the stiffener is continuous along the edge of the bracket, the effective bending span is to be taken to the position where the depth of the bracket is equal to one quarter of the depth of the stiffener, see Figure 3.

Figure 3 : Effective bending span for local support members with continuous face plate along bracket edge

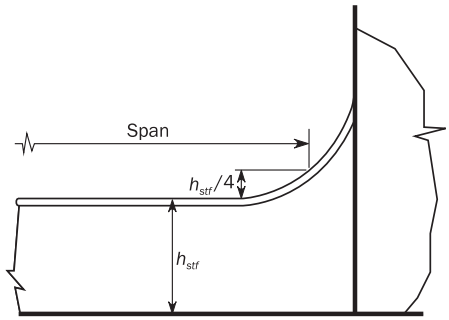

1.1.3 Effective shear span of stiffeners

The effective shear span, ℓ_{shr} in m, of stiffeners is to be measured as shown in Figure 4 for single skin structures and Figure 5 for double skin structures.

Figure 4 : Effective shear span of stiffeners supported by web stiffeners (single skin construction)

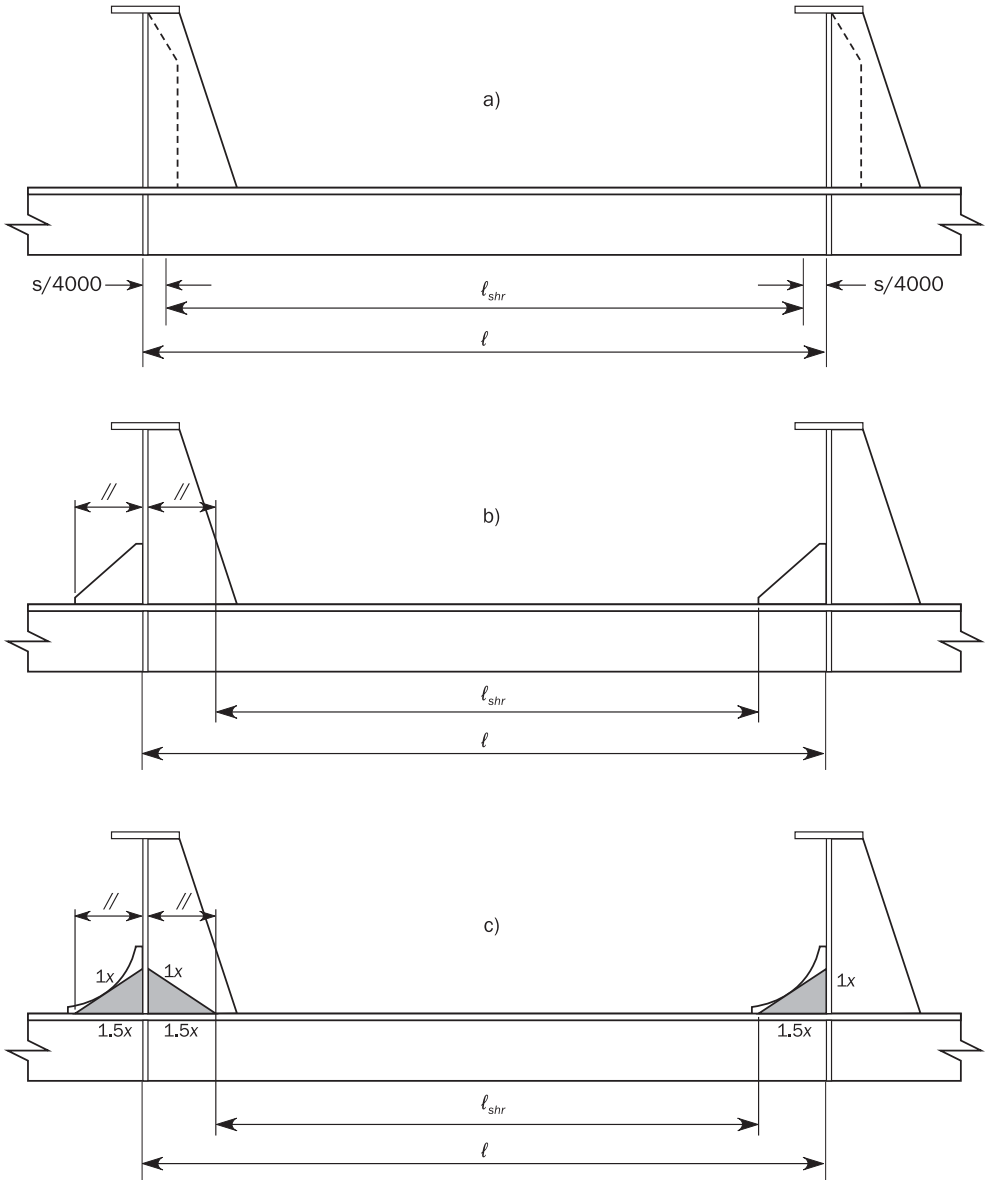

The effective shear span may be reduced for brackets fitted on either the flange or the free edge of the stiffener, or for brackets fitted to the attached plating on the side opposite to that of the stiffener.

If brackets are fitted at both the flange or free edge of the stiffener, and to the attached plating on the side opposite to the stiffener the effective shear span may be reduced using the longer effective bracket arm.

Regardless of support detail, the full length of the stiffener may be reduced by a minimum of s/4000 m at each end of the member, hence the effective shear span ℓ_{shr}, is not to be taken greater than:

$$\ell_{shr} \leq \ell - \frac{s}{2000}$$

Figure 5 : Effective shear span of stiffeners supported by web stiffeners (double skin construction)

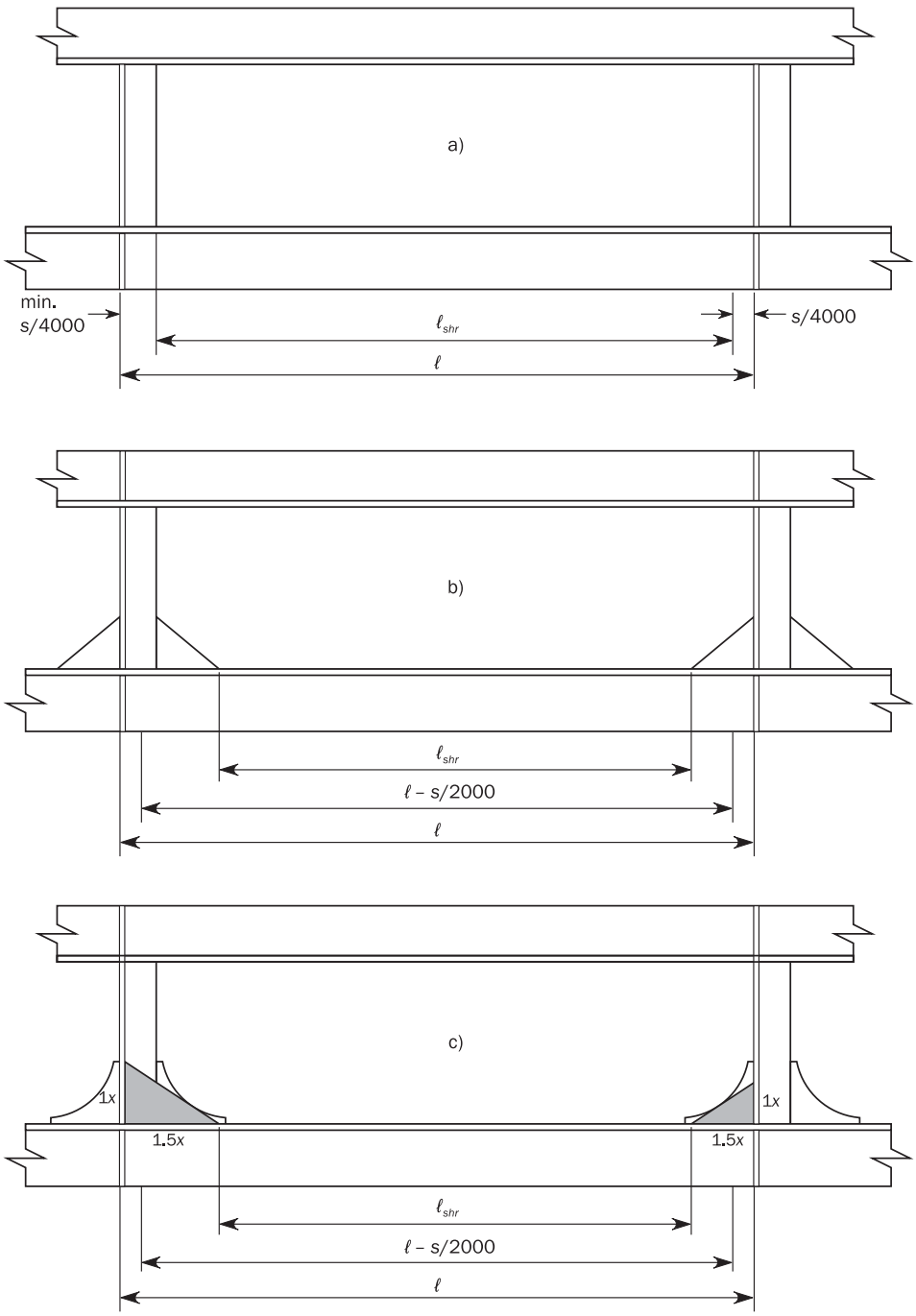

For curved and/or long brackets (high length/height ratio), the effective bracket length is to be taken as the maximum inscribed 1:1.5 right angled triangle as shown in item (c) of both Figure 4 and Figure 5.

Where the face plate of the stiffener is continuous along the curved edge of the bracket, the bracket length to be considered for determination of the span point location is not to be taken greater than 1.5 times the length of the bracket arm as shown in Figure 6.

Figure 6 : Effective shear span for local support members with continuous face plate along bracket edge

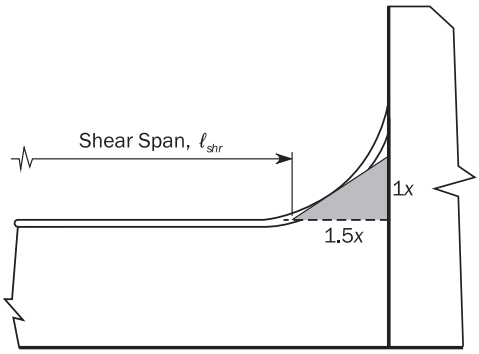

1.1.4 Effect of hull form shape on span of stiffeners

For curved stiffeners, the span is defined as the chord length between span points to be measured at the flange for stiffeners with a flange, and at the free edge for flat bar stiffeners. The calculation of the effective span is to be in accordance with requirements given in [1.1.2] and [1.1.3].

1.1.5 Effective span of stiffeners supported by struts

The arrangement of stiffeners supported by struts is not allowed for ships over 120 m in length.

The span, ℓ of stiffeners supported by one strut fitted at mid distance of the primary supporting members is to be taken as $0.7\ell_2$.

In case where two struts are fitted at 1/3 and 2/3 length between primary supporting members, the span, ℓ of stiffeners is to be taken as $0.7\ell_2$.

ℓ_1 and ℓ_2 are the spans defined in Figure 7 and Figure 8.

Figure 7 : Span of stiffeners with one strut

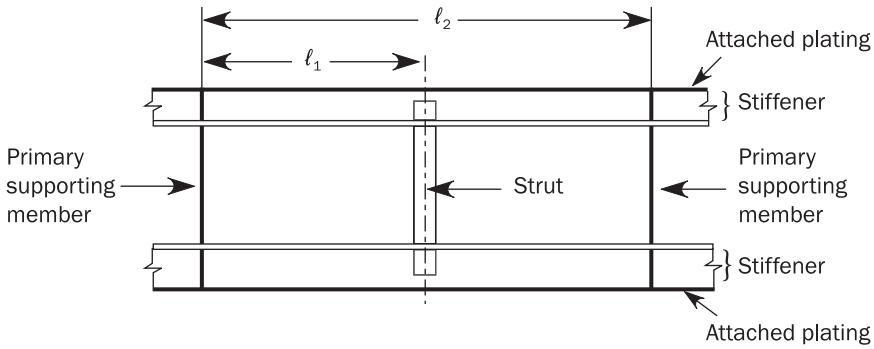

Figure 8 : Span of stiffeners with two struts

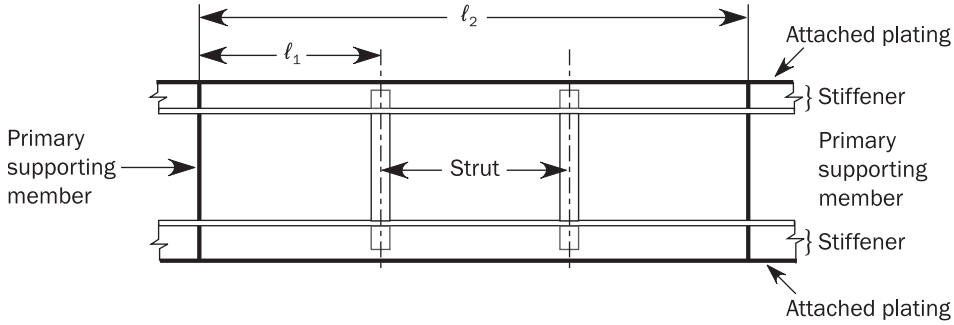

Figure 9 : Effective bending span of primary supporting member

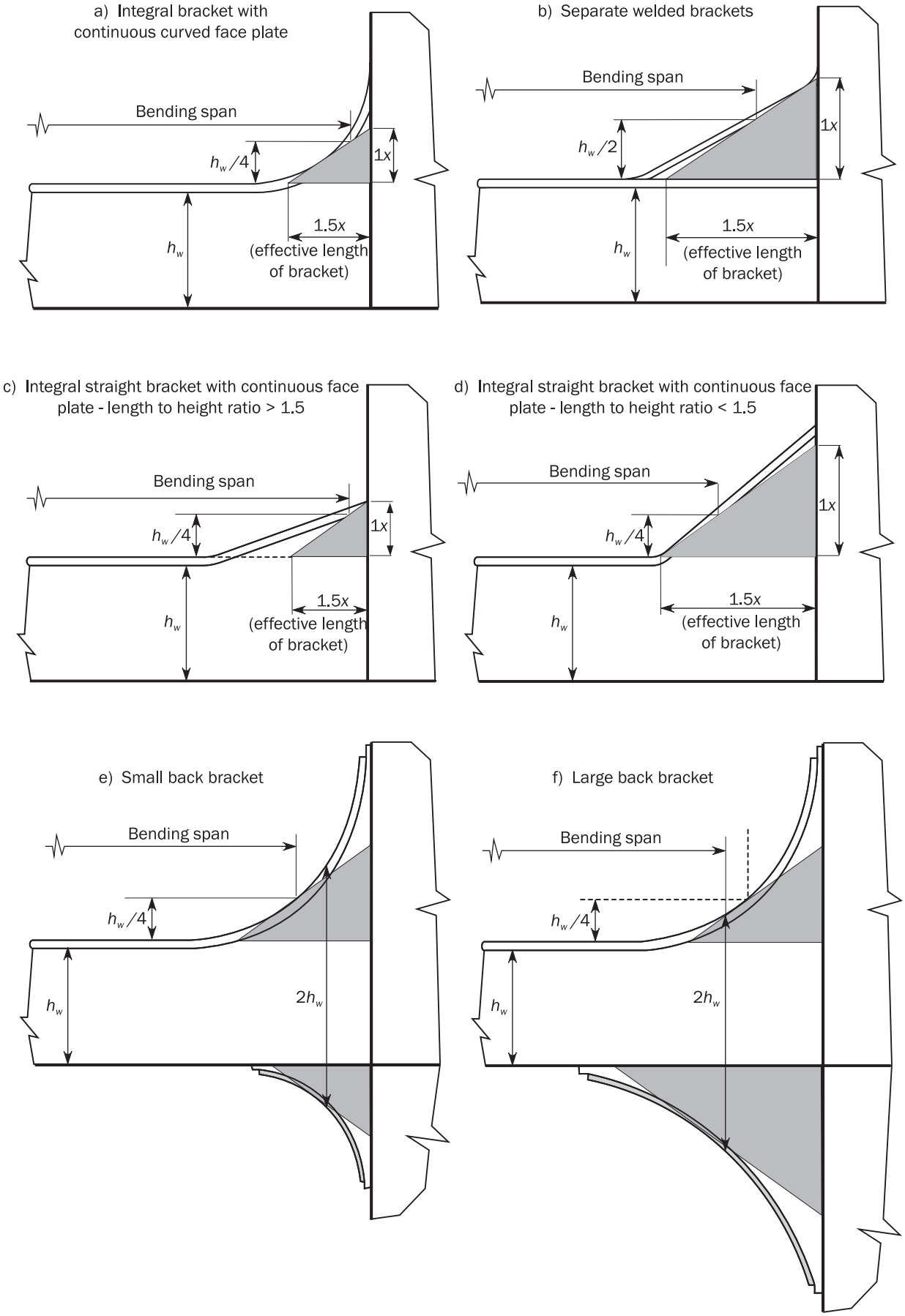

Figure 10 : Effective shear span of primary supporting member

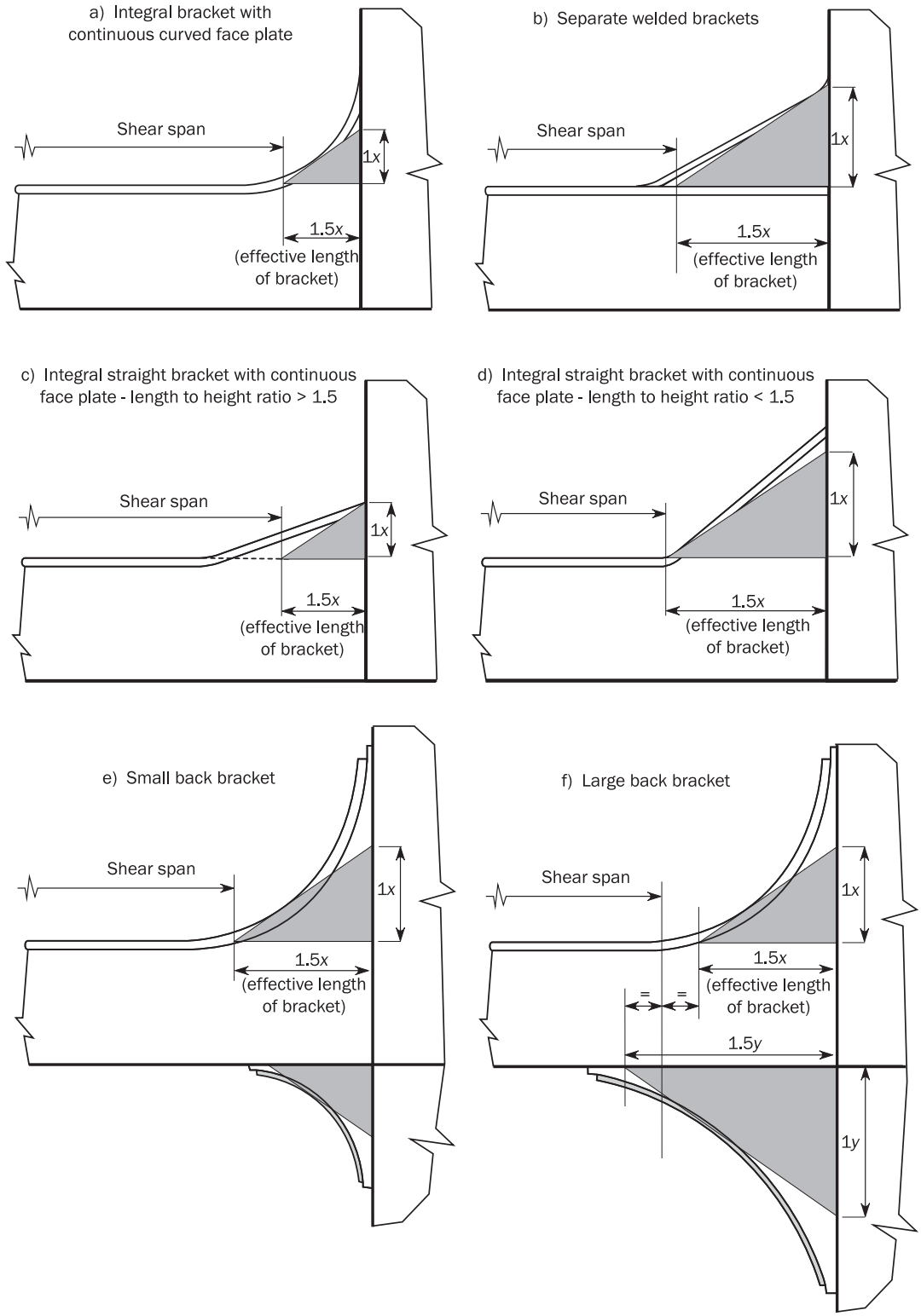

1.1.6 Effective bending span of primary supporting members

The effective bending span, ℓ_{bdg}, in m, of a primary supporting member without end bracket is to be taken as the length of the member between supports.

The effective bending span, ℓ_{bdg}, of a primary supporting member may be taken as less than the full length of the member between supports provided that suitable end brackets are fitted.

The effective bending span ℓ_{bdg}, in m, of a primary supporting member with end brackets is taken between points where the depth of the bracket is equal to half the web height of the primary supporting member as shown in item (b) of Figure 9. The effective bracket used to define these span points is to be taken as given in [1.1.8].

In case of brackets where the face plate of the member is continuous along the face of the bracket, as shown in items (a), (c) and (d) of Figure 9, the effective bending span ℓ_{bdg}, in m, is taken between points where the depth of the bracket is equal to one quarter the web height of the primary supporting member. The effective bracket used to define these span points is to be taken as given in [1.1.8].

For straight brackets with a length to height ratio greater than 1.5, the span point is to be taken to the effective bracket; otherwise the span point is to be taken to the fitted bracket.

For curved brackets, for span positions above the tangent point between fitted bracket and effective bracket, the span point is to be taken to the fitted bracket; otherwise, the span point is to be taken to the effective bracket.

For arrangements where the primary supporting member face plate is carried on to the bracket and backing brackets are fitted; the span point need not be taken greater than to the position where the total depth reaches twice the depth of the primary supporting member. Arrangements with small and large backing brackets are shown in items (e) and (f) of Figure 9.

For arrangements where the height of the primary supporting member is maintained and the face plate width is increased towards the support; the effective bending span may be taken to a position where the face plate breadth reaches twice the nominal breadth.

1.1.7 Effective shear span of primary supporting members

The effective shear span of the primary supporting member may be reduced compared to effective bending span, and taken between the toes of the effective brackets supporting the member, where the toes of effective brackets are as shown in Figure 10. The effective bracket used to define the toe point is given in [1.1.8].

For arrangements where the effective backing bracket is larger than the effective bracket in way of face plate, the shear span is to be taken as the mean distance between toes of the effective brackets as shown in item (f) of Figure 10.

1.1.8 Effective bracket definition

The effective bracket is defined as the maximum size of right angled triangular bracket with a length to height ratio of 1.5 that fits inside the fitted bracket. See Figure 9 for examples.

1.2 Spacing and load supporting breadth

1.2.1 Stiffeners

Stiffeners spacing, s, in mm, for the calculation of the effective attached plating of stiffeners is to be taken as the mean spacing between stiffeners and taken equal to, see Figure 11.

$$s = \frac{b_1 + b_2 + b_3 + b_4}{4}$$

where:

b_1, b_2, b_3, b_4: Spacings between stiffeners at ends, in mm.

In general, the loading breadth supported by stiffener is to be taken equal to s.

1.2.2 Primary supporting member

Primary supporting member spacing, S, for the calculation of the effective attached plating of primary supporting members is to be taken as the mean spacing between adjacent primary supporting members, and taken equal to, see Figure 11.

$$S = \frac{b_1 + b_2 + b_3 + b_4}{4}$$

where:

b_1, b_2, b_3, b_4 : Spacings between primary supporting members at ends.

In general, the loading breadth supported by a primary supporting member is to be taken equal to S.

1.2.3 Spacing of curved plating

For curved plating, the stiffener spacing, s or the primary supporting member spacing, S is to be measured on the mean chord between members.

Figure 11 : Spacing of plating

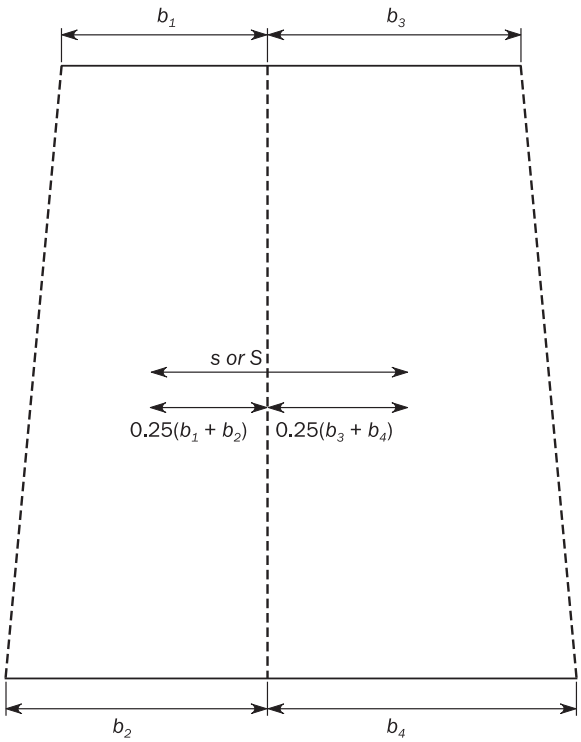

1.3 Effective breadth

1.3.1 Stiffeners

The effective breadth, b_{eff}, in mm, of the attached plating to be considered in the actual net section modulus for the yielding check of stiffeners is to be obtained from the following formulae:

- Where the plating extends on both sides of the stiffener:

  $b_{eff} = 200\ell$, or

  $b_{eff} = s$

  whichever is lesser.

- Where the plating extends on one side of the stiffener (i.e. stiffeners bounding openings):

  $b_{eff} = 100\ell$, or

  $b_{eff} = 0.5\ s$

  whichever is lesser.

However, where the attached plate net thickness is less than 8 mm, the effective breadth is not to be taken greater than 600 mm.

The effective breadth, b_{eff}, in mm, of the attached plating to be considered for the buckling check of stiffeners is given in Ch 8, Sec 5, [2.3.5].

1.3.2 Primary supporting members

The effective breadth of attached plating, b_{eff}, in m, for calculating the section modulus and/or moment of inertia of a primary supporting member is to be taken as:

$$b_{eff} = S \cdot \min\left[\frac{1.12}{1 + \frac{1.75}{\left(\frac{\ell_{bdg}}{S\sqrt{3}}\right)^{1.6}}};1.0\right] \quad \text{for} \quad \frac{\ell_{bdg}}{S\sqrt{3}} \geq 1$$

$$b_{eff} = 0.407\frac{\ell_{bdg}}{\sqrt{3}} \quad \text{for} \quad \frac{\ell_{bdg}}{S\sqrt{3}} < 1$$

1.3.3 Effective area of curved face plate and attached plating of primary supporting members

The effective net area given in a) and b) is only applicable to curved face plates and curved attached plating of primary supporting members. This is not applicable for the area of web stiffeners parallel to the face plate.

The effective net area is applicable to primary supporting members for the following calculations:

- Actual net section modulus used for comparison with the scantling requirements in Ch 6.
- Actual effective net area of curved face plates, modelled by beam elements, used in Ch 7.

a) The effective net area, $A_{eff\text{-}n50}$, in mm^2, is to be taken as:

$A_{eff\text{-}n50} = C_f\, t_{f\text{-}n50}\, b_f$

where:

C_f : Flange efficiency coefficient is to be obtained from the following formula but not to be greater than 1.0:

$$C_f = C_{f1}\frac{1.285}{\beta k_1} \quad \text{for symmetrical face plate}$$

$$C_f = 0.18 + \frac{0.08}{\beta^2} \quad \text{for unsymmetrical face plate}$$

$$C_f = C_{f1}\frac{1.285}{\beta} \quad \text{for attached plating of box girders}$$

C_{f1} : Coefficient taken equal to:

- For symmetrical face plates,

$$C_{f1} = \frac{(\sinh k_1\beta\ \cosh k_1\beta + \sin k_1\beta\ \cos k_1\beta)}{(\cosh k_1\beta)^2 + (\cos k_1\ \beta)^2}$$

- For attached plating of box girders with two webs,

$$C_{f1} = \frac{0.78\ (\sinh\beta + \sin\beta)\ (\cosh\beta - \cos\beta)}{(\sinh\beta)^2 + \sin^2\beta}$$

- For attached plating of box girders with multiple webs,

$$C_{f1} = \frac{1.56\ (\cosh\beta - \cos\beta)}{\sinh\beta + \sin\beta}$$

k_1 : Coefficient calculated as:

$k_1 = 1.4 + 1.25\,(1.4 - \beta)^3$ for $\beta < 1.4$

$k_1 = 1.4$ for $\beta \geq 1.4$

β : Coefficient calculated as:

$$\beta = \frac{1.285\ b_1}{\sqrt{r_f\ t_{f-n50}}}\ \text{, in rad.}$$

b_1 : Breadth, in mm, to be taken equal to:

- For symmetrical face plates, $b_1 = 0.5\ (b_f - t_{w\text{-}n50})$
- For unsymmetrical face plates, $b_1 = b_f$
- For attached plating of box girders, $b_1 = s_w - t_{w\text{-}n50}$

s_w : Spacing of supporting webs for box girders, in mm.

$t_{f\text{-}n50}$: Net flange thickness, in mm. For calculation of C_f and β of unsymmetrical face plates, $t_{f\text{-}n50}$ is not to be taken greater than $t_{w\text{-}n50}$.

$t_{w\text{-}n50}$: Net web plate thickness, in mm.

r_f : Radius of curved face plate or attached plating, in mm, see Figure 12 at mid thickness.

b_f : Breadth of face plate or attached plating, in mm, see Figure 12.

b) The effective net area, in mm^2, of curved face plates supported by radial brackets, or attached plating supported by cylindrical stiffeners, is given by:

$$A_{eff-n50} = \left(\frac{3r_f\ t_{f-n50} + C_f\ s_r^2}{3r_f\ t_{f-n50} + s_r^2}\right) t_{f-n50}\ b_f$$

where:

s_r : Spacing of tripping brackets or web stiffeners or stiffeners normal to the web plating, in mm, see Figure 12.

Figure 12 : Curved shell panel and face plate

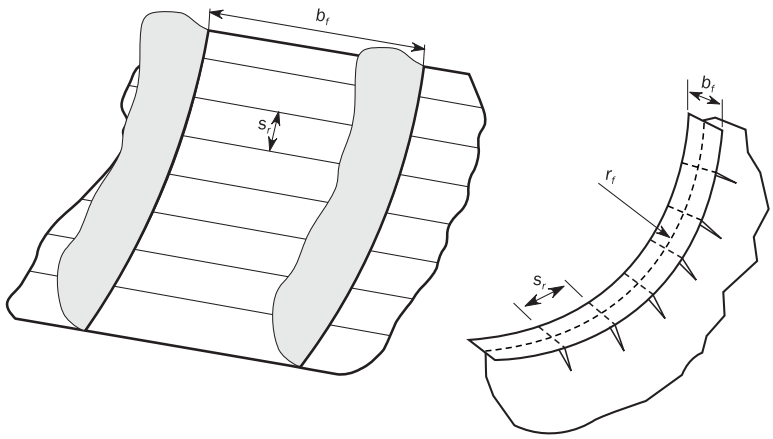

1.4 Geometrical properties of stiffeners and primary supporting members

1.4.1 Stiffener profile with a bulb section

The properties of bulb profile sections are to be determined by direct calculations.

Where direct calculation of properties is not possible, a bulb section may be taken equivalent to a built-up section. The net dimensions of the equivalent built-up section are to be obtained, in mm, from the following formulae.

$$h_w = h'_w - \frac{h'_w}{9.2} + 2$$

$$b_f = \alpha\left(t'_w + \frac{h'_w}{6.7} - 2\right)$$

$$t_f = \frac{h'_w}{9.2} - 2$$

$$t_w = t'_w$$

where:

h'_w, t'_w : Net height and thickness of a bulb section, in mm, as shown in Figure 13.

α : Coefficient equal to:

$$\alpha = 1.1 + \frac{(120 - h'_w)^2}{3000} \quad \text{for } h'_w \le 120$$

$$\alpha = 1.0 \quad \text{for } h'_w > 120$$

Figure 13 : Dimensions of stiffeners

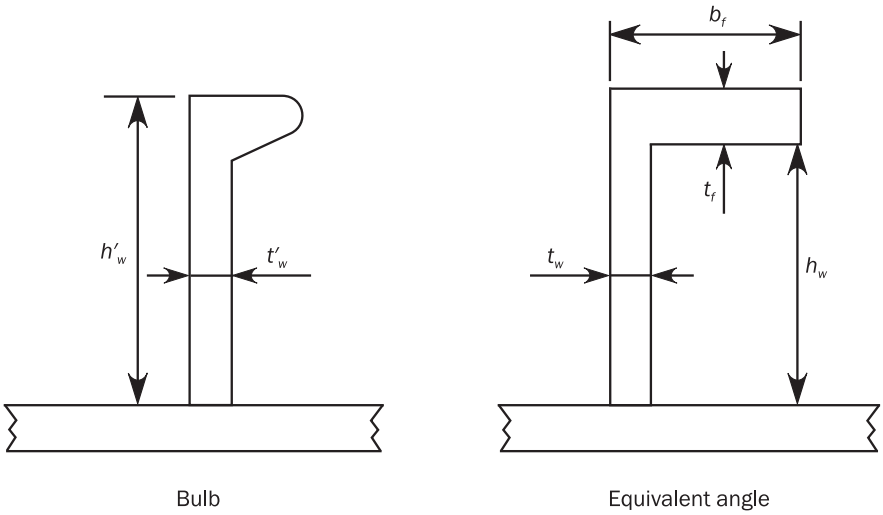

1.4.2 Net elastic shear area of stiffeners

The net elastic shear area, A_{shr}, in cm^2, of stiffeners is to be taken as:

$$A_{shr} = d_{shr}\, t_w\, 10^{-2}$$

d_{shr} : Effective shear depth of stiffener, in mm, as defined in [1.4.3].

t_w : Net web thickness of the stiffener, in mm, as defined in Ch 3, Sec 2, Figure 2.

1.4.3 Effective shear depth of stiffeners

The effective shear depth of stiffeners, d_{shr}, in mm, is to be taken as:

$$d_{shr} = (h_{stf} - 0.5t_{c-stf} + t_p + 0.5t_{c-pl})\sin\varphi_w$$

where:

h_{stf} : Height of stiffener, in mm, as defined in Ch 3, Sec 2, Figure 2.

t_p : Net thickness of the stiffener attached plating, in mm, as defined in Ch 3, Sec 2, Figure 2.

t_{c_stf} : Corrosion addition, in mm, of considered stiffener as given in Ch 3, Sec 3.

t_{c_pl} : Corrosion addition, in mm, of attached plate of the stiffener considered as given in Ch 3, Sec 3.

φ_w : Angle, in deg, as defined in Figure 14. φ_w is to be taken as 90 degrees if the angle is greater than or equal to 75 degrees.

1.4.4 Elastic net section modulus and net moment of inertia of stiffeners

The elastic net section modulus, Z, in cm^3 and the net moment of inertia, I, in cm^4 of stiffeners, is to be taken as:

$Z = Z_{stf} \sin \varphi_w$

$I = I_{st} \sin^2 \varphi_w$

where:

Z_{stf} : Net section modulus of the stiffener, in cm^3, considered perpendicular to its attached plate, i.e. with φ_w = 90 deg.

I_{st} : Net moment of inertia of the stiffener, in cm^4, considered perpendicular to its attached plate, i.e. with φ_w = 90 deg.

φ_w : Angle, in deg, as defined in Figure 14. φ_w is to be taken as 90 degrees if the angle is greater than or equal to 75 degrees.

Figure 14 : Angle between stiffener web and attached plating

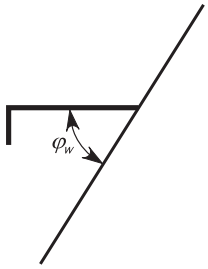

1.4.5 Effective net plastic shear area of stiffeners

The net plastic shear area, $A_{shr\text{-}pl}$, of stiffeners, in cm^2, which is used for assessment against impact loads is to be taken as:

$A_{shr\text{-}pl} = A_{shr}$

where:

A_{shr} : Net elastic shear area, in cm^2, as defined in [1.4.2].

1.4.6 Effective net plastic section modulus of stiffeners

The effective net plastic section modulus, Z_{pl}, of stiffeners, in cm^3, which is used for assessment against impact loads, is to be taken as:

$$Z_{pl} = \frac{f_w\, h_w^2\, t_w}{2000} + \frac{(2\gamma - 1)\, A_f\, h_{f-ctr}}{1000} \qquad \text{for } 75° \le \varphi_w \le 90°$$

$$Z_{pl} = \frac{f_w\, h_w^2\, t_w \sin\varphi_w}{2000} + \frac{(2\gamma - 1)\, A_f\, (h_{f-ctr} \sin\varphi_w - b_{f-ctr} \cos\varphi_w)}{1000} \qquad \text{for } \varphi_w < 75°$$

where:

f_w : Web shear stress factor, taken equal to:

- For flanged profile cross sections with n = 1 or 2, f_w = 0.75.
- For flanged profile cross sections with n = 0, f_w = 1.0.
- For flat bar stiffeners, f_w = 1.0.

n : Number of plastic hinges at end supports of each member, taken equal to: 0, 1 or 2.

A plastic hinge at end support may be considered where:

- The stiffener is continuous at the support.

- The stiffener passes through the support plate while it is connected at its termination point by a carling (or equivalent) to adjacent stiffeners.
- The stiffener is attached to an abutting stiffener effective in bending (not a buckling stiffener).
- The stiffener is attached to a bracket effective in bending. The bracket is assumed to be effective in bending when it is attached to another stiffener (not a buckling stiffener).

h_w : Depth of stiffener web, in mm, taken equal to:

- For T, L (rolled and built-up) profiles and flat bar, as defined in Ch 3, Sec 2, Figure 2.
- For L2 and L3 profiles as defined in Ch 3, Sec 2, Figure 3.
- For bulb profiles, to be taken as defined in [1.4.1].

γ : Coefficient equal to:

$$\gamma = \frac{1 + \sqrt{3 + 12\beta}}{4}$$

β : Coefficient equal to:

- $\beta = \dfrac{t_w^2 \, f_b \, \ell_{shr}^2}{80 b_f^2 \, t_f \, h_{f-ctr}} 10^6 + \dfrac{t_w}{2b_f}$ for L profiles without a mid-span tripping bracket,

  but not to be taken greater than 0.5.
- β = 0.5 for other cases.

A_f : Net cross sectional area of flange, in mm^2:

- A_f = 0 for flat bar stiffeners.
- $A_f = b_f \, t_f$ for other stiffeners.

$b_{f\text{-}ctr}$: Distance from mid thickness of stiffener web to the centre of the flange area:

- $b_{f\text{-}ctr} = 0.5\,(b_f - t_w)$ for rolled angle profiles and bulb profiles.
- $b_{f\text{-}ctr}$ = 0 for T profiles.

$h_{f\text{-}ctr}$: Height of stiffener measured to the mid thickness of the flange:

- $h_{f\text{-}ctr} = h_w + 0.5\, t_f$ for profiles with flange of rectangular shape except for L3 profiles and for bulb profiles.
- $h_{f\text{-}ctr} = h_w - d_e - 0.5\, t_f$ for L3 profiles as defined in Ch 3, Sec 2, Figure 3.

d_e : Distance from upper edge of web to the top of the flange, in mm, for L3 profiles, see Ch 3, Sec 2, Figure 3.

f_b : Coefficient taken equal to:

- f_b = 0.8 for flanges continuous through the primary supporting member, with end bracket(s).
- f_b = 0.7 for flanges sniped at the primary supporting member or terminated at the support without aligned structure on the other side of the support, and with end bracket(s).
- f_b = 1.0 for other stiffeners.

t_f : Net flange thickness, in mm.

- t_f = 0 for flat bar stiffeners.
- For bulb profiles t_f is defined in [1.4.1].

1.4.7 Primary supporting member web not perpendicular to attached plating

Where the primary supporting member web is not perpendicular to the attached plating, the actual net shear area, in cm^2, and the actual net section modulus, in cm^3, can be obtained from the following formulae:

- Actual net shear area:

$A_{sh-n50} = A_{sh-0-n50} \sin \varphi_w$ for $\varphi_w < 75°$
$A_{sh-n50} = A_{sh-0-n50}$ for $75° \le \varphi_w \le 90°$

- Actual net section modulus:

$Z_{n50} = Z_{perp-n50} \sin \varphi_w$ for $\varphi_w < 75°$
$Z_{n50} = Z_{perp-n50}$ for $75° \le \varphi_w \le 90°$

where:

$A_{sh-0-n50}$: Actual net shear area, in cm^2, of the primary supporting member assumed to be perpendicular to the attached plating, to be taken equal to:

$$A_{sh-0-n50} = (h_w + t_{f-n50} + t_{p-n50})\ t_{w-n50}\ 10^{-2}$$

$Z_{perp-n50}$: Actual section modulus, in cm^3, with its attached plating of the primary supporting member assumed to be perpendicular to the attached plating.

1.4.8 Shear area of primary supporting members with web openings

The effective web height, h_{eff}, in mm, to be considered for calculating the effective net shear area, A_{sh-n50} is to be taken as the lesser of:

$h_{eff} = h_w$

$h_{eff} = h_{w3} + h_{w4}$

$h_{eff} = h_{w1} + h_{w2} + h_{w4}$

where:

h_w : Web height of primary supporting member, in mm.

h_{w1}, h_{w2}, h_{w3}, h_{w4}: Dimensions as shown in Figure 15.

Where an opening is located at a distance less than $h_w/3$ from the cross-section considered, h_{eff} is to be taken as the smaller of the net height and the net distance through the opening. See Figure 15.

Figure 15 : Effective shear area in way of web openings

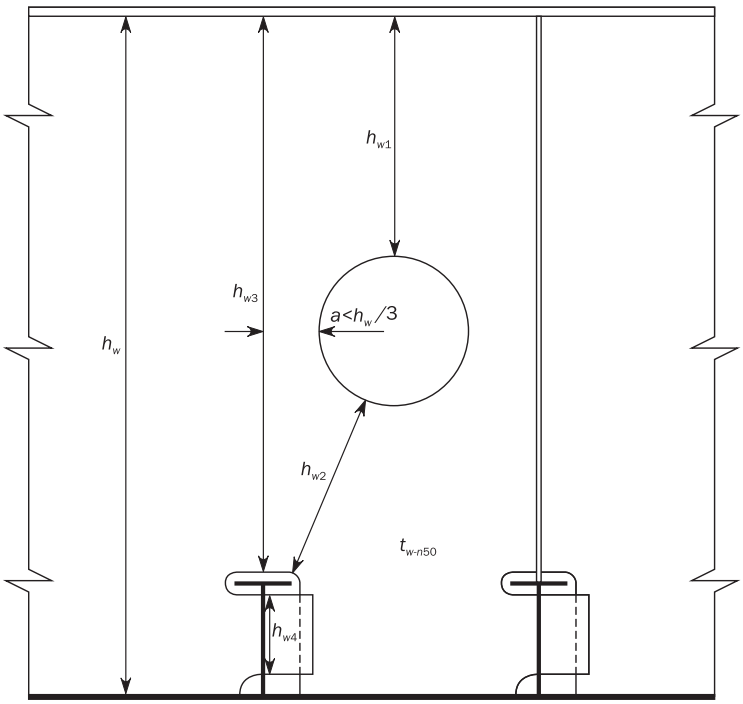

2 PLATES

2.1 Idealisation of EPP

2.1.1 EPP

An elementary plate panel (EPP) is the unstiffened part of the plating between stiffeners and/or primary supporting members. The plate panel length, *a*, and breadth, *b*, of the EPP are defined respectively as the longest and shortest plate edges, as shown in Figure 16.

Figure 16 : Elementary Plate Panel (EPP) definition

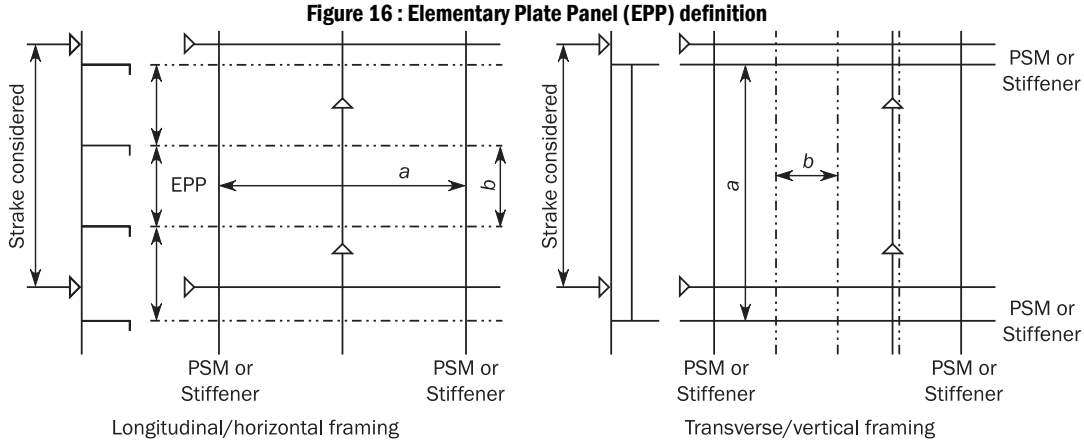

2.1.2 Strake required thickness

The required thickness of a plate strake is to be taken as the greatest value required for each EPP within that strake. The requirements given in Table 1 are to be applied for the selection of strakes to be considered as shown in Figure 17.

The maximum corrosion addition within a strake is to be applied according to Ch 3, Sec 3, [1.2.4].

Table 1 : Strake considered in a given EPP

	$a/b > 2$	$a/b \leq 2$
$a_1 > b/2$	All strakes (St1, St2, St3, St4)	All strakes (St1, St2, St3, St4)
$a_1 \leq b/2$	Strakes St2 and St4	All strakes (St1, St2, St3, St4)

Figure 17 : Strake considered in a given EPP

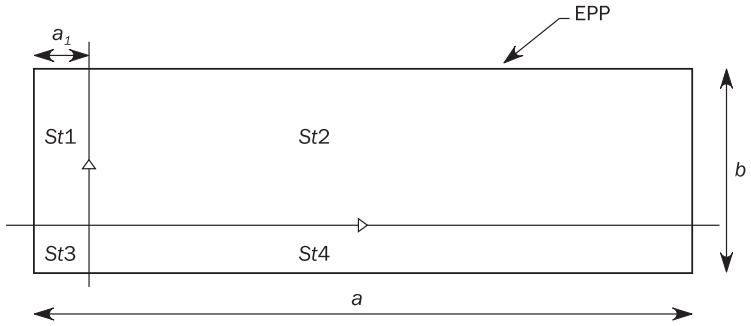

where:

a_1 : Distance, in mm, measured inside the considered strake in the direction of the long edge of the EPP, between the strake boundary weld seam and the EPP edge.

2.1.3

For direct strength assessment, the EPP is idealised with the mesh arrangement in the finite element model.

2.2 Load calculation point

2.2.1 Yielding

For the yielding check, the local pressure and hull girder stress, used for the calculation of the local scantling requirements are to be taken at the Load Calculation Point (LCP) having coordinates *x*, *y* and *z* as defined in Table 2.

Table 2 : LCP coordinates for yielding

LCP coordinates	General (1)		Horizontal plating		Vertical transverse structure and transverse stool plating	
	Longitudinal framing (Figure 18)	Transverse framing (Figure 19)	Longitudinal framing	Transverse framing	Horizontal framing (Figure 20)	Vertical framing (Figure 21)
x coordinate	Mid-length of the EPP		Mid-length of the EPP		Corresponding to *y* and *z* values	
y coordinate	Corresponding to *x* and *z* coordinates		Outboard *y* value of the EPP		Outboard *y* value of the EPP, taken at *z* level (2)	
z coordinate	Lower edge of the EPP	The greater of lower edge of the EPP or lower edge of the strake	Corresponding to *x* and *y* values		Lower edge of the EPP	The greater of lower edge of the EPP or lower edge of the strake

(1) All structures other than horizontal platings or vertical transverse structures.

(2) For transom plate, the y coordinate of the load calculation point is to be taken corresponding to y value at side shell at z level of the load calculation point, for the external dynamic pressure calculation.

Figure 18 : Load calculation point (LCP) for longitudinal framing

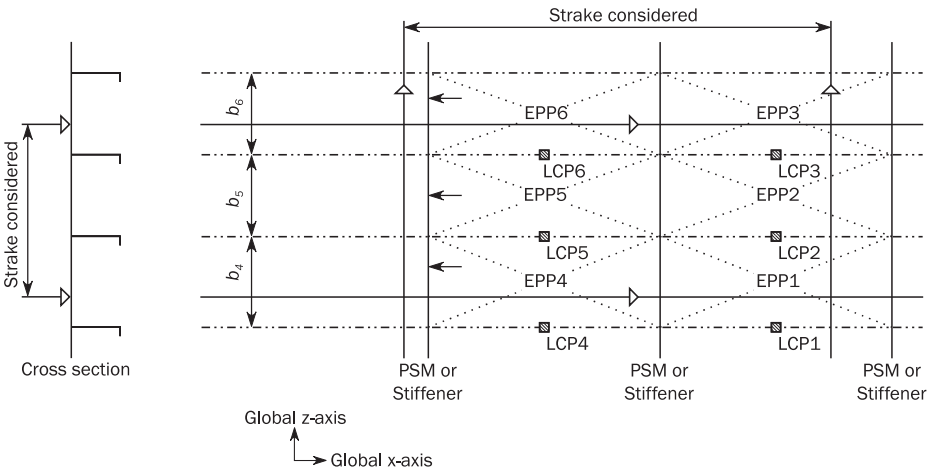

Figure 19 : Load calculation point for transverse framing

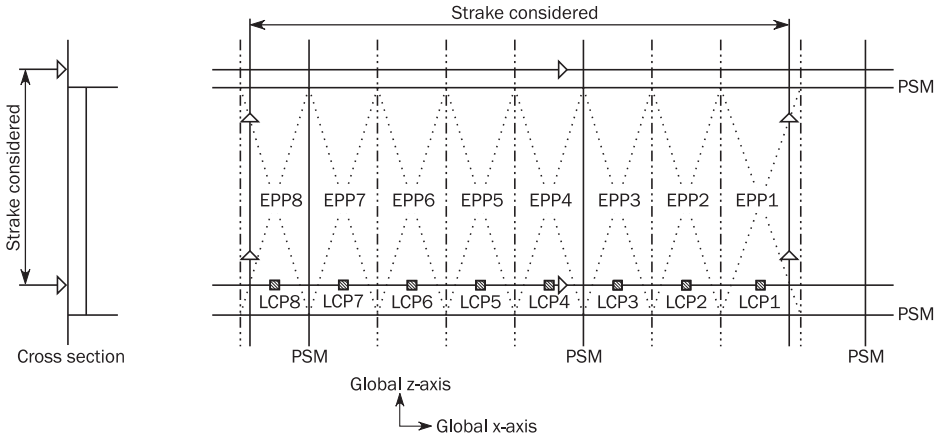

Figure 20 : Load calculation point for horizontal framing on transverse vertical structure

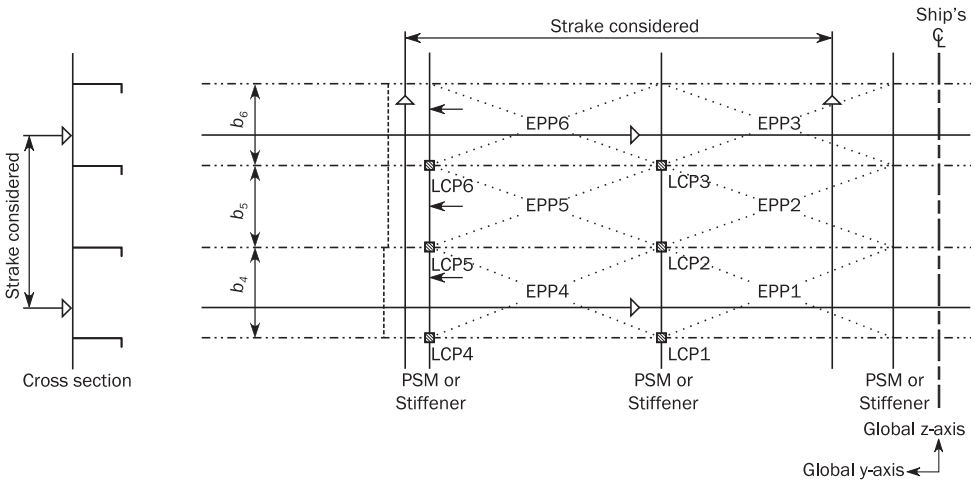

Figure 21 : Load calculation point for vertical framing on transverse vertical structure

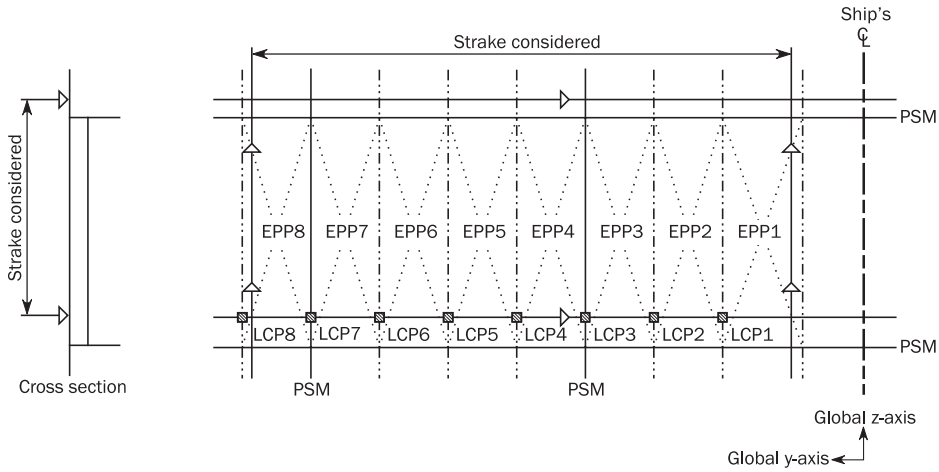

2.2.2 Buckling

For the prescriptive buckling check of the EPP according to Ch 8, Sec 3, the LCP for the pressure and for the hull girder stresses are defined in Table 3.

For the FE buckling check, Ch 8, Sec 4 is applicable.

Table 3 : LCP coordinates for plate buckling

LCP coordinates	LCP for pressure	LCP for hull girder stresses (Figure 22)		
		Bending stresses (1)		Shear stresses
		Non horizontal plate	Horizontal plate	
x coordinate	Same coordinates as LCP for yielding See Table 2	Mid-length of the EPP		
y coordinate		Corresponding to *x* and *z* values	Outboard and inboard ends of the EPP (points A1 and A2)	Mid-point of EPP (point B)
z coordinate		Both upper and lower ends of the EPP (points A1 and A2)	Corresponding to *x* and *y* values	

(1) The bending stress for curved plate panel is the mean value of the stresses calculated at points A1 and A2.

Figure 22 : LCP for plate buckling – hull girder stresses

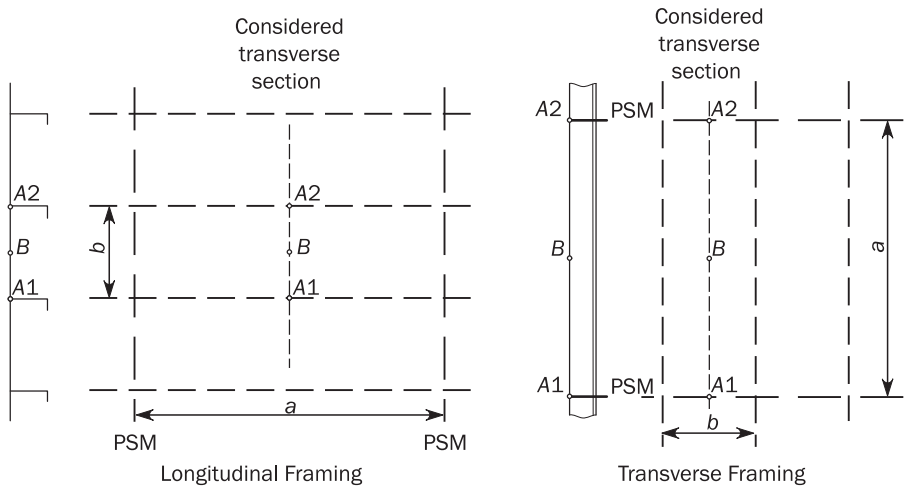

3 STIFFENERS

3.1 Reference point

3.1.1

The requirements of section modulus for stiffeners relate to the reference point giving the minimum section modulus. This reference point is generally located as shown in Figure 23 for typical profiles.

Figure 23 : Reference point for calculation of section modulus and hull girder stress for local scantling assessment

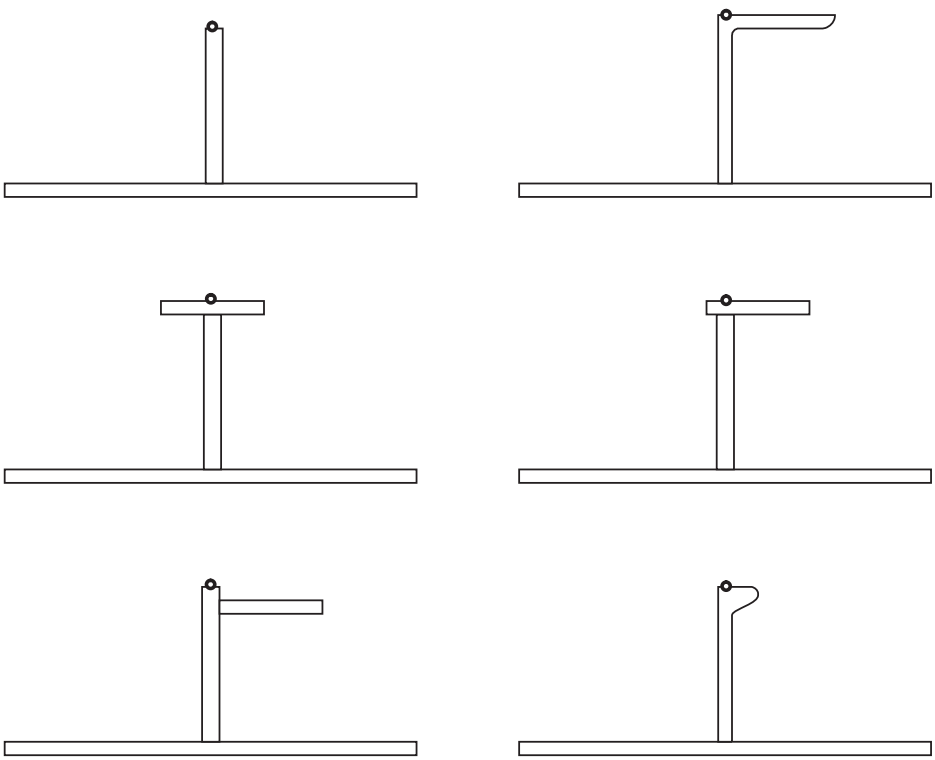

3.2 Load calculation points

3.2.1 LCP for Pressure

The load calculation point for the pressure is located at:

- Middle of the full length, ℓ, of the considered stiffener.
- The intersection point between the stiffener and its attached plate.

For stiffeners located on transom plate, the y coordinate of the load calculation point is to be taken corresponding to y value at side shell at z level of the load calculation point, for the external dynamic pressure calculation.

3.2.2 LCP for hull girder bending stress

The load calculation point for the hull girder bending stresses is defined as follows:

- For yielding verification according Ch 6:
  - At the middle of the full length, ℓ, of the considered stiffener.
  - At the reference point given in Figure 23.
- For prescriptive buckling requirements according to Ch 8:
  - At the middle of the full length, ℓ, of the considered stiffener.
  - At the intersection point between the stiffener and its attached plate.

3.2.3 Non-horizontal stiffeners

The lateral pressure, P is to be calculated as the maximum between the value obtained at middle of the full length, ℓ, and the value obtained from the following formulae:

$P = \frac{p_U + p_L}{2}$ when the upper end of the vertical stiffener is below the lowest zero pressure level.

$P = \frac{\ell_1}{\ell}\frac{p_L}{2}$ when the upper end of the vertical stiffener is at or above the lowest zero pressure level, see Figure 24.

where:

ℓ_1 : Distance, in m, between the lower end of vertical stiffener and the lowest zero pressure level.

P_U, P_L : Lateral pressures at the upper and lower end of the vertical stiffener span ℓ, respectively.

Figure 24 : Definition of pressure for vertical stiffeners

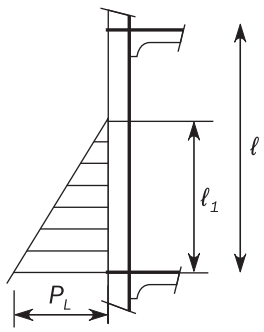

4 PRIMARY SUPPORTING MEMBERS

4.1 Load calculation point

4.1.1

The load calculation point is located at the middle of the full length, ℓ, at the attachment point of the primary supporting member with its attached plate. However, for primary supporting members in the cargo hold region the requirements in Pt 2, Ch 1, Sec 4, [4], as applicable, for bulk carriers and Pt 2, Ch 2, Sec 3, [1] for oil tankers are to be followed.

For primary supporting members located on transom plate, the y coordinate of the load calculation point is to be taken corresponding to y value at side shell at z level of load calculation point for the external dynamic pressure calculation.

PART 1 CHAPTER 4

LOADS

Table of Contents

SECTION 1
Introduction
1 General
SECTION 2
Dynamic Load Cases
1 General
2 Dynamic Load Cases for Strength Assessment
3 Dynamic Load Cases for Fatigue Assessment
SECTION 3
Ship Motions and Accelerations
1 General
2 Ship Motions and Accelerations
3 Accelerations at any Position
SECTION 4
Hull Girder Loads
1 Application
2 Vertical Still Water Hull Girder Loads
3 Dynamic Hull Girder Loads
SECTION 5
External Loads
1 Sea Pressure
2 External Pressures on Exposed Decks
3 External Impact Pressures for the Bow Area
4 External Pressures on Superstructure and Deckhouses
5 External Pressures on Hatch Covers
SECTION 6
Internal Loads
1 Pressures Due to Liquids
2 Pressures and Forces Due to Dry Bulk Cargo
3 Pressures and Forces Due to Dry Cargoes in Flooded Conditions
4 Steel Coil Loads in Cargo Holds of Bulk Carriers
5 Loads on Non-Exposed Decks and Platforms
6 Sloshing Pressures in Tanks
7 Design Pressure For Tank Testing

SECTION 7
Design Load Scenarios
1 General
2 Design Load Scenarios for Strength Assessment
3 Design Load Scenarios for Fatigue Assessment
SECTION 8
Loading Conditions
1 Application
2 Common Design Loading Conditions
3 Oil Tankers
4 Bulk Carriers
5 Standard Loading Conditions for Fatigue Assessment
APPENDIX 1
Hold Mass Curves
1 General
2 Maximum and Minimum Masses of Cargo in Each Hold
3 Maximum and Minimum Masses of Cargo of Two Adjacent Holds

SECTION 1
INTRODUCTION

SYMBOLS

For symbols not defined in this section, refer to Ch 1, Sec 4.

S : Static load case.

S+D : Static plus dynamic load case.

1 GENERAL

1.1 Application

1.1.1 Scope

This chapter provides the design load for strength and fatigue assessments.

The load combinations are to be derived for the design load scenarios specified in Ch 4, Sec 7. This section uses the concept of design load scenarios to specify consistent design load sets which cover the appropriate operating modes of a bulk carrier or oil tanker.

1.1.2 Equivalent Design Wave EDW

The dynamic loads associated with each dynamic load case are based on the Equivalent Design Wave (EDW) concept. The EDW concept applies a consistent set of dynamic loads to the ship such that specified dominant load response is equivalent to the required long term response value.

1.1.3 Probability level for strength and fatigue assessments

In this chapter, the assessments are to be understood as follows:

- Strength assessment means the assessment for the strength criteria excluding fatigue, for the loads corresponding to the probability level of 10^{-8}, for the ballast water exchange, for harbour conditions and for flooded conditions.
- Fatigue assessment means the assessment for the fatigue criteria for the loads corresponding to the probability level of 10^{-2}.

1.1.4 Dynamic load components

All dynamic load components are to be concurrent values calculated for each dynamic load case.

1.1.5 Loads for strength assessment

The strength assessment is to be undertaken for all design load scenarios and the final assessment is to be made on the most onerous strength requirement.

Each design load scenario for strength assessment is composed of a Static (S) load case or a Static + Dynamic (S+D) load case, where the static and dynamic loads are dependent on the loading condition being considered.

The static loads are defined in the following sections:

- Still water hull girder loads in Ch 4, Sec 4.
- External loads in Ch 4, Sec 5.
- Internal loads in Ch 4, Sec 6.

The EDWs for the strength assessment and the dynamic load combination factors for global loads are listed in Ch 4, Sec 2, [2].

The dynamic load components are defined in the following sections:

- Dynamic hull girder load components in Ch 4, Sec 4.
- External loads in Ch 4, Sec 5.
- Internal loads in Ch 4, Sec 6.

1.1.6 Loads for fatigue assessment

Each design load scenario for fatigue assessment is composed of a Static + Dynamic (S+D) load case, where the static and dynamic loads are dependent on the loading condition being considered.

The static loads are defined in the following sections:

- Still water hull girder loads in Ch 4, Sec 4.
- External loads in Ch 4, Sec 5.
- Internal loads in Ch 4, Sec 6.

The EDWs for the fatigue assessment are listed in Ch 4, Sec 2, [3].

The dynamic load components are defined in the following sections:

- Dynamic hull girder load components in Ch 4, Sec 4.
- External loads in Ch 4, Sec 5.
- Internal loads in Ch 4, Sec 6.

1.2 Definitions

1.2.1 Coordinate system

The coordinate system is defined in Ch 1, Sec 4, [3.6.1].

1.2.2 Sign convention for ship motions

The ship motions are defined with respect to the ship's centre of gravity (COG) as shown in Figure 1, where:

- Positive surge is translation in the *X*-axis direction (positive forward).
- Positive sway is translation in the *Y*-axis direction (positive towards port side of ship).
- Positive heave is translation in the *Z*-axis direction (positive upwards).
- Positive roll motion is positive rotation about a longitudinal axis through the COG (starboard down and port up).
- Positive pitch motion is positive rotation about a transverse axis through the COG (bow down and stern up).
- Positive yaw motion is positive rotation about a vertical axis through the COG (bow moving to port and stern to starboard).

Figure 1 : Definition of positive motions

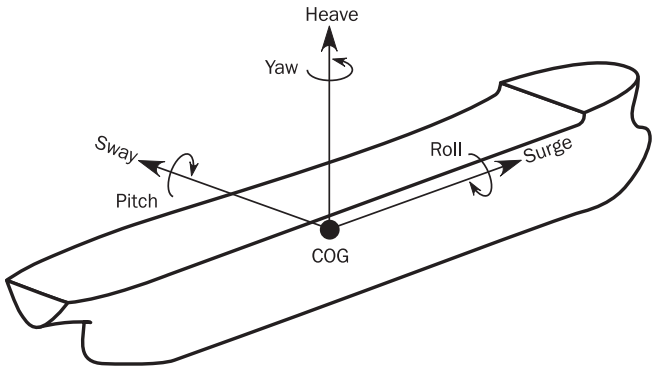

1.2.3 Sign convention for hull girder loads

The sign conventions of vertical bending moments, vertical shear forces, horizontal bending moments and torsional moments at any ship transverse section are as shown in Figure 2, namely:

- The vertical bending moments M_{sw} and M_{wv} are positive when they induce tensile stresses in the strength deck (hogging bending moment) and negative when they induce tensile stresses in the bottom (sagging bending moment).
- The vertical shear forces Q_{sw}, Q_{wv} are positive in the case of downward resulting forces acting aft of the transverse section and upward resulting forces acting forward of the transverse section under consideration.
- The horizontal bending moment M_{wh} is positive when it induces tensile stresses in the starboard side and negative when it induces tensile stresses in the port side.
- The torsional moment M_{wt} is positive in the case of resulting moment acting aft of the transverse section following negative rotation around the *X*-axis, and of resulting moment acting forward of the transverse section following positive rotation around the *X*-axis.

Figure 2 : Sign conventions for shear forces Q_{sw}, Q_{wv} and bending moments M_{sw}, M_{wv}, M_{wh} and M_{wt}

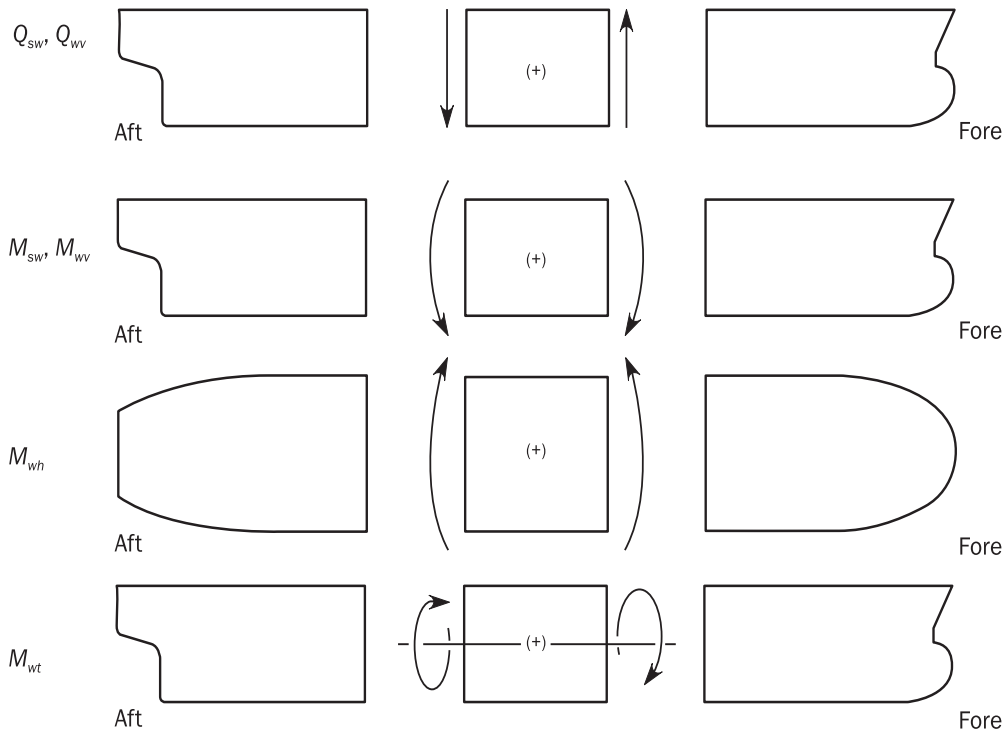

SECTION 2
DYNAMIC LOAD CASES

SYMBOLS

For symbols not defined in this section, refer to Ch 1, Sec 4.

a_{surge}, $a_{pitch\text{-}x}$, a_{sway}, $a_{roll\text{-}y}$, a_{heave}, $a_{roll\text{-}z}$, $a_{pitch\text{-}z}$: Acceleration components, as defined in Ch 4, Sec 3.

f_{xL} : Ratio between X-coordinate of the load point and L, to be taken as:

$$f_{xL} = \frac{x}{L}$$, but not to be taken less than 0.0 or greater than 1.0.

f_T : Ratio between draught at a loading condition and scantling draught, as defined in Ch 4, Sec 3.

f_{lp} : Factor depending on longitudinal position along the ship, to be taken as:

$f_{lp} = 1.0$ for $x/L \le 0.5$
$f_{lp} = -1.0$ for $0.5 < x/L$

$f_{lp\text{-}OST}$: Factor for the longitudinal distribution of the torsional moment for the OST load case, to be taken as:

$f_{lp\text{-}OST} = 5\, f_{xL}$ for $x/L < 0.2$
$f_{lp\text{-}OST} = 1.0$ for $0.2 \le x/L < 0.4$
$f_{lp\text{-}OST} = -7.6\, f_{xL} + 4.04$ for $0.4 \le x/L < 0.65$
$f_{lp\text{-}OST} = -0.9$ for $0.65 \le x/L < 0.85$
$f_{lp\text{-}OST} = 6\, f_{xL} - 6$ for $0.85 \le x/L$

$f_{lp\text{-}OSA}$: Factor for the longitudinal distribution of the torsional moment for the OSA load case, to be taken as:

$f_{lp\text{-}OSA} = -(0.2 + 0.3\, f_T)$ for $x/L < 0.4$
$f_{lp\text{-}OSA} = -(0.2 + 0.3\, f_T)(5.6 - 11.5\, f_{xL})$ for $0.4 \le x/L < 0.6$
$f_{lp\text{-}OSA} = 1.3(0.2 + 0.3\, f_T)$ for $0.6 \le x/L$

WS : Weather side, side of the ship exposed to the incoming waves.

LS : Lee side, sheltered side of the ship away from the incoming waves.

M_{WV} : Vertical wave bending moment, in kNm, defined in Ch 4, Sec 4.

Q_{WV} : Vertical wave shear force, in kN, defined in Ch 4, Sec 4.

M_{WH} : Horizontal wave bending moment, in kNm, defined in Ch 4, Sec 4.

M_{WT} : Torsional wave bending moment, in kNm, defined in Ch 4, Sec 4.

C_{WV} : Load combination factor to be applied to the vertical wave bending moment.

C_{QW} : Load combination factor to be applied to the vertical wave shear force.

C_{WH} : Load combination factor to be applied to the horizontal wave bending moment.

C_{WT} : Load combination factor to be applied to the wave torsional moment.

C_{XS} : Load combination factor to be applied to the surge acceleration.

C_{XP} : Load combination factor to be applied to the longitudinal acceleration due to pitch.

C_{XG} : Load combination factor to be applied to the longitudinal acceleration due to pitch motion.

C_{YS} : Load combination factor to be applied to the sway acceleration.

C_{YR} : Load combination factor to be applied to the transverse acceleration due to roll.

C_{YG} : Load combination factor to be applied to the transverse acceleration due to roll motion.

C_{ZH} : Load combination factor to be applied to the heave acceleration.

C_{ZR} : Load combination factor to be applied to the vertical acceleration due to roll.

C_{ZP} : Load combination factor to be applied to the vertical acceleration due to pitch.

θ : Roll angle, in deg, as defined in Ch 4, Sec 3, [2.1.1].

φ : Pitch angle, in deg, as defined in Ch 4, Sec 3, [2.1.2].

1 GENERAL

1.1 Definition of dynamic load cases

1.1.1

The following Equivalent Design Waves (EDW) are to be used to generate the dynamic load cases for structural assessment:

- HSM load cases:

  HSM-1 and HSM-2: Head sea EDWs that minimise and maximise the vertical wave bending moment amidships respectively.

- HSA load cases:

  HSA-1 and HSA-2: Head sea EDWs that maximise and minimise the head sea vertical acceleration at FP respectively.

- FSM load cases:

  FSM-1 and FSM-2: Following sea EDWs that minimise and maximise the vertical wave bending moment amidships respectively.

- BSR load cases:

  BSR-1P and BSR-2P: Beam sea EDWs that minimise and maximise the roll motion downward and upward on the port side respectively with waves from the port side.

  BSR-1S and BSR-2S: Beam sea EDWs that maximise and minimise the roll motion downward and upward on the starboard side respectively with waves from the starboard side.

- BSP load cases:

  BSP-1P and BSP-2P: Beam sea EDWs that maximise and minimise the hydrodynamic pressure at the waterline amidships on the port side respectively.

  BSP-1S and BSP-2S: Beam sea EDWs that maximise and minimise the hydrodynamic pressure at the waterline amidships on the starboard side respectively.

- OST load cases:

  OST-1P and OST-2P: Oblique sea EDWs that minimise and maximise the torsional moment at 0.25*L* from the AE with waves from the port side respectively.

  OST-1S and OST-2S: Oblique sea EDWs that maximise and minimise the torsional moment at 0.25*L* from the AE with waves from the starboard side respectively.

- OSA load cases:

  OSA-1P and OSA-2P: Oblique sea EDWs that maximise and minimise the pitch acceleration with waves from the port side respectively.

  OSA-1S and OSA-2S: Oblique sea EDWs that maximise and minimise the pitch acceleration with waves from the starboard side respectively.

Note 1: 1 and 2 denote the maximum or the minimum dominate load component for each EDW.

Note 2: P and S denote that the weather side is on port side and on starboard side respectively.

HSA and OSA load cases are not to be used for fatigue assessment.

1.2 Application

1.2.1

The dynamic load cases described in this section are to be used for determining the dynamic loads required by the design load scenarios described in Ch 4, Sec 7. These dynamic load cases are to be applied to the following structural assessments:

a) Strength assessment:
   - For plating, ordinary stiffeners and primary supporting members by prescriptive methods.
   - For the direct strength method (FE analysis) assessment of structural members.

b) Fatigue assessment:
   - For structural details covered by simplified stress analysis.
   - For structural details covered by FE stress analysis.

2 DYNAMIC LOAD CASES FOR STRENGTH ASSESSMENT

2.1 Description of dynamic load cases

2.1.1

Table 1 to Table 3 describe the ship motions responses and the global loads corresponding to each dynamic load case to be considered for the strength assessment.

Table 1 : Ship responses for HSM, HSA and FSM load cases - Strength assessment

Loadcase	HSM-1	HSM-2	HSA-1	HSA-2	FSM-1	FSM-2
EDW	HSM		HSA		FSM	
Heading	Head		Head		Following	
Effect	Max. bending moment		Max. vertical acceleration		Max. bending moment	
VWBM	Sagging	Hogging	Sagging	Hogging	Sagging	Hogging
VWSF	Negative–aft Positive–fore	Positive–aft Negative–fore	Negative–aft Positive–fore	Positive–aft Negative–fore	Negative–aft Positive–fore	Positive–aft Negative–fore
HWBM	-	-	-	-	-	-
TM	-	-	-	-	-	-
Surge	To stern	To bow	To stern	To bow	To bow	To stern
a_{surge}	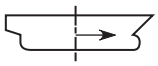	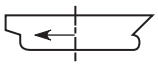	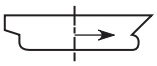	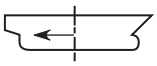	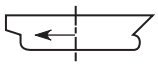	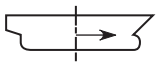
Sway	-	-	-	-	-	-
a_{sway}	-	-	-	-	-	-
Heave	Down	Up	Down	Up	-	-
a_{heave}					-	-
Roll	-	-	-	-	-	-
a_{roll}	-	-	-	-	-	-
Pitch	Bow down	Bow up	Bow down	Bow up	Bow up	Bow down
a_{pitch}	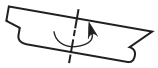	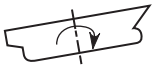	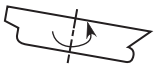			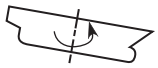

Table 2 : Ship responses for BSR and BSP load cases - Strength assessment

Load case	BSR-1P	BSR-2P	BSR-1S	BSR-2S	BSP-1P	BSP-2P	BSP-1S	BSP-2S
EDW	BSR		BSR		BSP		BSP	
Heading	Beam				Beam			
Effect	Max. roll				Max. pressure at waterline			
VWBM	Sagging	Hogging	Sagging	Hogging	Sagging	Hogging	Sagging	Hogging
VWSF	Negative–aft Positive–fore	Positive–aft Negative–fore	Negative–aft Positive–fore	Positive–aft Negative–fore	Negative–aft Positive–fore	Positive–aft Negative–fore	Negative–aft Positive–fore	Positive–aft Negative–fore
HWBM	Stbd tensile	Port tensile	Port tensile	Stbd tensile	Stbd tensile	Port tensile	Port tensile	Stbd tensile
TM	-	-	-	-	-	-	-	-
Surge	-	-	-	-	-	-	-	-
a_{surge}	-	-	-	-	-	-	-	-
Sway	To starboard	To portside	To portside	To starboard	To portside	To starboard	To starboard	To portside
a_{sway}	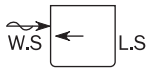	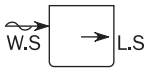	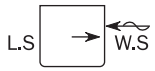	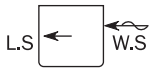	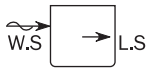	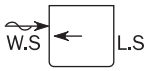	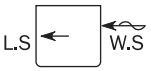	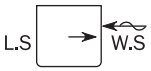
Heave	Down	Up	Down	Up	Down	Up	Down	Up
a_{heave}	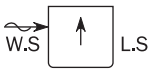	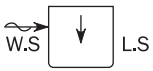	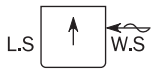	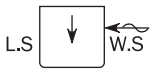	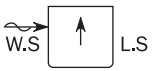	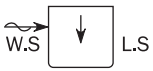	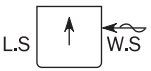	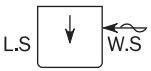
Roll	Portside down	Portside up	Starboard down	Starboard up	Portside down	Portside up	Starboard down	Starboard up
a_{roll}	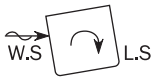				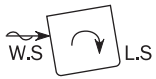			
Pitch	-	-	-	-	Bow down	Bow up	Bow down	Bow up
a_{pitch}	-	-	-	-				

Table 3 : Ship responses for OST and OSA load cases - Strength assessment

Load case	OST-1P	OST-2P	OST-1S	OST-2S	OSA-1P	OSA-2P	OSA-1S	OSA-2S
EDW	OST				OSA			
Heading	Oblique				Oblique			
Effect	Max. torsional moment				Max. pitch acceleration			
VWBM	Sagging	Hogging	Sagging	Hogging	Hogging	Sagging	Hogging	Sagging
VWSF	Negative–aft Positive–fore	Positive–aft Negative–fore	Negative–aft Positive–fore	Positive–aft Negative–fore	Positive–aft Negative–fore	Negative–aft Positive–fore	Positive–aft Negative–fore	Negative–aft Positive–fore
HWBM	Port tensile	Stbd tensile	Stbd tensile	Port tensile	Stbd tensile	Port tensile	Port tensile	Stbd tensile
TM	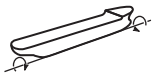	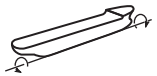		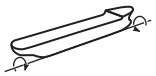			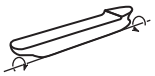	
Surge	To bow	To stern	To bow	To stern	To bow	To stern	To bow	To stern
a_{surge}	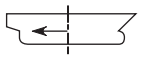	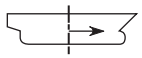	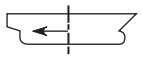	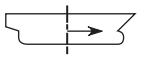	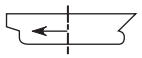	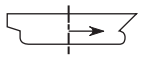	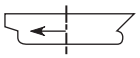	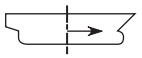
Sway	-	-	-	-	To portside	To starboard	To starboard	To portside
a_{sway}	-	-	-	-	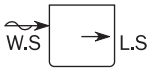	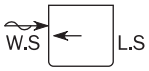	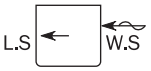	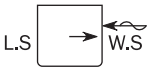
Heave	Down	Up	Down	Up	Up	Down	Up	Down
a_{heave}	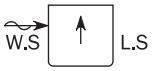	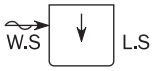	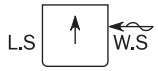	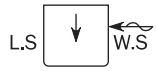	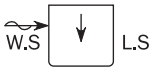	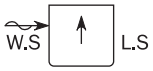	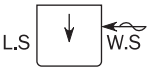	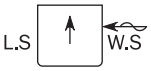
Roll	Portside down	Portside up	Starboard down	Starboard up	Portside down	Portside up	Starboard down	Starboard up
a_{roll}	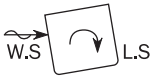				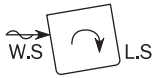			
Pitch	Bow up	Bow down	Bow up	Bow down	Bow up	Bow down	Bow up	Bow down
a_{pitch}	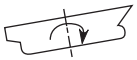			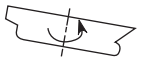	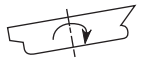			

2.2 Load combination factors

2.2.1

The load combinations factors, LCFs for the global loads and inertia load components for strength assessment are defined in:

Table 4 : LCFs for HSM, HSA and FSM load cases.

Table 5 : LCFs for BSR and BSP load cases.

Table 6 : LCFs for OST and OSA load cases.

Table 4 : Load combination factors, LCFs for HSM, HSA and FSM load cases - Strength assessment

Load component		LCF	HSM-1	HSM-2	HSA-1	HSA-2	FSM-1	FSM-2
Hull girder loads	M_{WV}	C_{WV}	-1	1	-0.7	0.7	$-0.4f_T - 0.6$	$0.4f_T + 0.6$
	Q_{WV}	C_{QW}	$-1.0f_{lp}$	$1.0f_{lp}$	$-0.6f_{lp}$	$0.6f_{lp}$	$-1.0f_{lp}$	$1.0f_{lp}$
	M_{WH}	C_{WH}	0	0	0	0	0	0
	M_{WT}	C_{WT}	0	0	0	0	0	0
Longitudinal accelerations	a_{surge}	C_{XS}	$0.3 - 0.2f_T$	$0.2f_T - 0.3$	0.2	-0.2	$0.2 - 0.4f_T$	$0.4f_T - 0.2$
	$a_{pitch\text{-}x}$	C_{XP}	-0.7	0.7	$-0.4f_T - 0.4$	$0.4f_T + 0.4$	0.15	-0.15
	$g\sin\varphi$	C_{XG}	0.6	-0.6	$0.4f_T + 0.4$	$-0.4f_T - 0.4$	-0.2	0.2
Transverse accelerations	a_{sway}	C_{YS}	0	0	0	0	0	0
	$a_{roll\text{-}y}$	C_{YR}	0	0	0	0	0	0
	$g\sin\theta$	C_{YG}	0	0	0	0	0	0
Vertical accelerations	a_{heave}	C_{ZH}	$0.5f_T - 0.15$	$0.15 - 0.5f_T$	$0.4f_T - 0.1$	$0.1 - 0.4f_T$	0	0
	$a_{roll\text{-}z}$	C_{ZR}	0	0	0	0	0	0
	$a_{pitch\text{-}z}$	C_{ZP}	-0.7	0.7	$-0.4f_T - 0.4$	$0.4f_T + 0.4$	0.15	-0.15

Table 5 : Load combination factors, LCFs for BSR and BSP load cases - Strength assessment

Load component		LCF	BSR-1P	BSR-2P	BSR-1S	BSR-2S
Hull girder loads	M_{WV}	C_{WV}	$0.1 - 0.2f_T$	$0.2f_T - 0.1$	$0.1 - 0.2f_T$	$0.2f_T - 0.1$
	Q_{WV}	C_{QW}	$(0.1 - 0.2f_T)\ f_{lp}$	$(0.2f_T - 0.1)\ f_{lp}$	$(0.1 - 0.2f_T)\ f_{lp}$	$(0.2f_T - 0.1)\ f_{lp}$
	M_{WH}	C_{WH}	$1.2 - 1.1f_T$	$1.1f_T - 1.2$	$1.1f_T - 1.2$	$1.2 - 1.1f_T$
	M_{WT}	C_{WT}	0	0	0	0
Longitudinal accelerations	a_{surge}	C_{XS}	0	0	0	0
	$a_{pitch\text{-}x}$	C_{XP}	0	0	0	0
	$g\sin\varphi$	C_{XG}	0	0	0	0
Transverse accelerations	a_{sway}	C_{YS}	$0.2 - 0.2f_T$	$0.2f_T - 0.2$	$0.2f_T - 0.2$	$0.2 - 0.2f_T$
	$a_{roll\text{-}y}$	C_{YR}	1	-1	-1	1
	$g\sin\theta$	C_{YG}	-1	1	1	-1
Vertical accelerations	a_{heave}	C_{ZH}	$0.7 - 0.4f_T$	$0.4f_T - 0.7$	$0.7 - 0.4f_T$	$0.4f_T - 0.7$
	$a_{roll\text{-}z}$	C_{ZR}	1	-1	-1	1
	$a_{pitch\text{-}z}$	C_{ZP}	0	0	0	0

Load component		LCF	BSP-1P	BSP-2P	BSP-1S	BSP-2S
Hull girder loads	M_{WV}	C_{WV}	$0.3 - 0.8f_T$	$0.8f_T - 0.3$	$0.3 - 0.8f_T$	$0.8f_T - 0.3$
	Q_{WV}	C_{QW}	$(0.3 - 0.8f_T)\ f_{lp}$	$(0.8f_T - 0.3)\ f_{lp}$	$(0.3 - 0.8f_T)\ f_{lp}$	$(0.8f_T - 0.3)\ f_{lp}$
	M_{WH}	C_{WH}	$0.7 - 0.7f_T$	$0.7f_T - 0.7$	$0.7f_T - 0.7$	$0.7 - 0.7f_T$
	M_{WT}	C_{WT}	0	0	0	0
Longitudinal accelerations	a_{surge}	C_{XS}	0	0	0	0
	$a_{pitch\text{-}x}$	C_{XP}	$0.1 - 0.3f_T$	$0.3f_T - 0.1$	$0.1 - 0.3f_T$	$0.3f_T - 0.1$
	$g\sin\varphi$	C_{XG}	$0.3f_T - 0.1$	$0.1 - 0.3f_T$	$0.3f_T - 0.1$	$0.1 - 0.3f_T$
Transverse accelerations	a_{sway}	C_{YS}	-0.9	0.9	0.9	-0.9
	$a_{roll\text{-}y}$	C_{YR}	0.3	-0.3	-0.3	0.3
	$g\sin\theta$	C_{YG}	-0.2	0.2	0.2	-0.2
Vertical accelerations	a_{heave}	C_{ZH}	1	-1	1	-1
	$a_{roll\text{-}z}$	C_{ZR}	0.3	-0.3	-0.3	0.3
	$a_{pitch\text{-}z}$	C_{ZP}	$0.1 - 0.3f_T$	$0.3f_T - 0.1$	$0.1 - 0.3f_T$	$0.3f_T - 0.1$

Table 6 : Load combination factors, LCFs for OST and OSA load cases - Strength assessment

Load component		LCF	OST-1P	OST-2P	OST-1S	OST-2S
Hull girder loads	M_{WV}	C_{WV}	$-0.3 - 0.2f_T$	$0.3 + 0.2f_T$	$-0.3 - 0.2f_T$	$0.3 + 0.2f_T$
	Q_{WV}	C_{QW}	$(-0.35-0.2f_T)\ f_{lp}$	$(0.35+0.2f_T)\ f_{lp}$	$(-0.35-0.2f_T)\ f_{lp}$	$(0.35+0.2f_T)\ f_{lp}$
	M_{WH}	C_{WH}	- 0.9	0.9	0.9	- 0.9
	M_{WT}	C_{WT}	$-f_{lp\text{-}OST}$	$f_{lp\text{-}OST}$	$f_{lp\text{-}OST}$	$-f_{lp\text{-}OST}$
Longitudinal accelerations	a_{surge}	C_{XS}	$0.1f_T - 0.15$	$0.15 - 0.1f_T$	$0.1f_T - 0.15$	$0.15 - 0.1f_T$
	$a_{pitch\text{-}x}$	C_{XP}	$0.7 - 0.3f_T$	$0.3f_T - 0.7$	$0.7 - 0.3f_T$	$0.3f_T - 0.7$
	$g\sin\varphi$	C_{XG}	$0.2f_T - 0.45$	$0.45 - 0.2f_T$	$0.2f_T - 0.45$	$0.45 - 0.2f_T$
Transverse accelerations	a_{sway}	C_{YS}	0	0	0	0
	$a_{roll\text{-}y}$	C_{YR}	$0.4f_T - 0.25$	$0.25 - 0.4f_T$	$0.25 - 0.4f_T$	$0.4f_T - 0.25$
	$g\sin\theta$	C_{YG}	$0.1 - 0.2f_T$	$0.2f_T - 0.1$	$0.2f_T - 0.1$	$0.1 - 0.2f_T$
Vertical accelerations	a_{heave}	C_{ZH}	$0.2f_T - 0.05$	$0.05 - 0.2f_T$	$0.2f_T - 0.05$	$0.05 - 0.2f_T$
	$a_{roll\text{-}z}$	C_{ZR}	$0.4f_T - 0.25$	$0.25 - 0.4f_T$	$0.25 - 0.4f_T$	$0.4f_T - 0.25$
	$a_{pitch\text{-}z}$	C_{ZP}	$0.7 - 0.3f_T$	$0.3f_T - 0.7$	$0.7 - 0.3f_T$	$0.3f_T - 0.7$

Load component		LCF	OSA-1P	OSA-2P	OSA-1S	OSA-2S
Hull girder loads	M_{WV}	C_{WV}	$0.75 - 0.5f_T$	$-0.75 + 0.5f_T$	$0.75 - 0.5f_T$	$-0.75 + 0.5f_T$
	Q_{WV}	C_{QW}	$(0.6-0.4f_T)\ f_{lp}$	$(-0.6+0.4f_T)\ f_{lp}$	$(0.6-0.4f_T)\ f_{lp}$	$(-0.6+0.4f_T)\ f_{lp}$
	M_{WH}	C_{WH}	$0.55 + 0.2f_T$	$-0.55 - 0.2f_T$	$-0.55 - 0.2f_T$	$0.55 + 0.2f_T$
	M_{WT}	C_{WT}	$-f_{lp\text{-}OSA}$	$f_{lp\text{-}OSA}$	$f_{lp\text{-}OSA}$	$-f_{lp\text{-}OSA}$
Longitudinal accelerations	a_{surge}	C_{XS}	$0.1f_T - 0.45$	$0.45 - 0.1f_T$	$-0.45 + 0.1f_T$	$0.45 - 0.1f_T$
	$a_{pitch\text{-}x}$	C_{XP}	1.0	- 1.0	1.0	- 1.0
	$g\sin\varphi$	C_{XG}	- 1.0	1.0	- 1.0	1.0
Transverse accelerations	a_{sway}	C_{YS}	$-0.2 - 0.1f_T$	$0.2 + 0.1f_T$	$0.2 + 0.1f_T$	$-0.2 - 0.1f_T$
	$a_{roll\text{-}y}$	C_{YR}	$0.3 - 0.2f_T$	$0.2f_T - 0.3$	$0.2f_T - 0.3$	$0.3 - 0.2f_T$
	$g\sin\theta$	C_{YG}	$0.1f_T - 0.2$	$0.2 - 0.1f_T$	$0.2 - 0.1f_T$	$0.1f_T - 0.2$
Vertical accelerations	a_{heave}	C_{ZH}	$-0.2f_T$	$0.2f_T$	$-0.2f_T$	$0.2f_T$
	$a_{roll\text{-}z}$	C_{ZR}	$0.3 - 0.2f_T$	$0.2f_T - 0.3$	$0.2f_T - 0.3$	$0.3 - 0.2f_T$
	$a_{pitch\text{-}z}$	C_{ZP}	1.0	- 1.0	1.0	- 1.0

3 DYNAMIC LOAD CASES FOR FATIGUE ASSESSMENT

3.1 Description of dynamic load cases

3.1.1

Table 7 to Table 9 define the ship motions responses and the global loads corresponding to each dynamic load case to be considered for fatigue assessment.

Table 7 : Ship responses for HSM and FSM load cases - Fatigue assessment

Load case	HSM-1	HSM-2	FSM-1	FSM-2
EDW	HSM		FSM	
Heading	Head		Following	
Effect	Max. bending moment		Max. bending moment	
VWBM	Sagging	Hogging	Sagging	Hogging
VWSF	Negative–aft Positive–fore	Positive–aft Negative–fore	Negative–aft Positive–fore	Positive–aft Negative–fore
HWBM	-	-	-	-
TM	-	-	-	-
Surge	To stern	To bow	To bow	To stern
a_{surge}	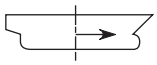	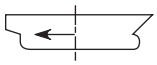	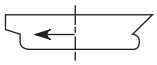	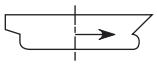
Sway	-	-	-	-
a_{sway}	-	-	-	-
Heave	Down	Up	-	-
a_{heave}			-	-
Roll	-	-	-	-
a_{roll}	-	-	-	-
Pitch	Bow down	Bow up	Bow up	Bow down
a_{pitch}	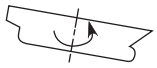	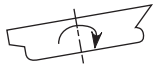	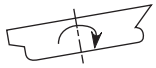	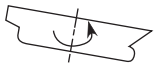

Table 8 : Ship responses for BSR and BSP load cases - Fatigue assessment

Load case	BSR-1P	BSR-2P	BSR-1S	BSR-2S	BSP-1P	BSP-2P	BSP-1S	BSP-2S
EDW	BSR		BSR		BSP		BSP	
Heading	Beam				Beam			
Effect	Max. roll				Max. pressure at waterline			
VWBM	Sagging	Hogging	Sagging	Hogging	Sagging	Hogging	Sagging	Hogging
VWSF	Negative–aft Positive–fore	Positive–aft Negative–fore	Negative–aft Positive–fore	Positive–aft Negative–fore	Negative–aft Positive–fore	Positive–aft Negative–fore	Negative–aft Positive–fore	Positive–aft Negative–fore
HWBM	Stbd tensile	Port tensile	Port tensile	Stbd tensile	Stbd tensile	Port tensile	Port tensile	Stbd tensile
TM	-	-	-	-	-	-	-	-
Surge	-	-	-	-	-	-	-	-
a_{surge}	-	-	-	-	-	-	-	-
Sway	To starboard	To portside	To portside	To starboard	To portside	To starboard	To starboard	To portside
a_{sway}	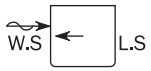	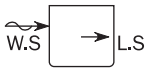	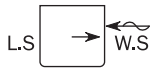	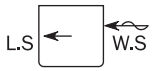	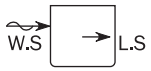	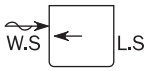	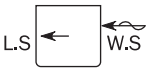	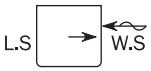
Heave	Down	Up	Down	Up	Down	Up	Down	Up
a_{heave}	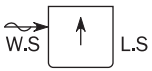	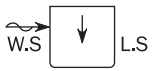	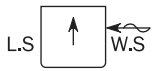	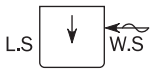	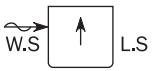	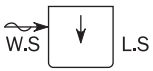	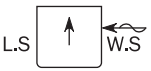	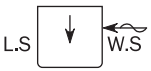
Roll	Portside down	Portside up	Starboard down	Starboard up	Portside down	Portside up	Starboard down	Starboard up
a_{roll}	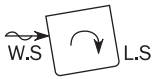				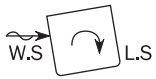			
Pitch	-	-	-	-	-	-	-	-
a_{pitch}	-	-	-	-	-	-	-	-

Table 9 : Ship responses for OST load cases - Fatigue assessment

Load case	OST-1P	OST-2P	OST-1S	OST-2S
EDW	OST			
Heading	Oblique			
Effect	Max. torsional moment			
VWBM	Sagging	Hogging	Sagging	Hogging
VWSF	Negative–aft Positive–fore	Positive–aft Negative–fore	Negative–aft Positive–fore	Positive–aft Negative–fore
HWBM	Port tensile	Stbd tensile	Stbd tensile	Port tensile
TM	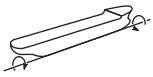	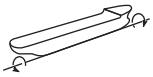	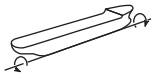	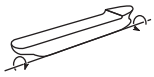
Surge	To bow	To stern	To bow	To stern
a_{surge}	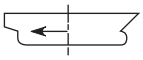	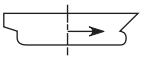	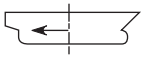	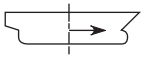
Sway	-	-	-	-
a_{sway}	-	-	-	-
Heave	Up	Down	Up	Down
a_{heave}	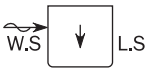	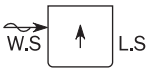	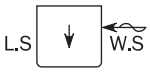	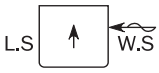
Roll	Portside down	Portside up	Starboard down	Starboard up
a_{roll}	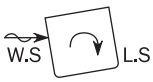			
Pitch	Bow up	Bow down	Bow up	Bow down
a_{pitch}		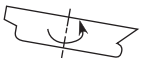		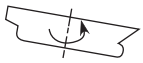

3.2 Load combination factors

3.2.1

The load combinations factors, LCFs for the global loads and inertial load components for fatigue assessment are defined in:

Table 10: LCFs for HSM and FSM load cases.

Table 11: LCFs for BSR and BSP load cases.

Table 12: LCFs for OST load case.

Table 10 : Load combination factors, LCFs for HSM and FSM load cases - Fatigue assessment

Load component		LCF	HSM-1	HSM-2	FSM-1	FSM-2
Hull girder loads	M_{WV}	C_{WV}	-1	1	$-0.75 - 0.2f_T$	$0.75 + 0.2f_T$
	Q_{WV}	C_{QW}	$-1.0\ f_{lp}$	$1.0\ f_{lp}$	$(-0.75-0.2f_T)\ f_{lp}$	$(0.75+0.2f_T)\ f_{lp}$
	M_{WH}	C_{WH}	0	0	0	0
	M_{WT}	C_{WT}	0	0	0	0
Longitudinal accelerations	a_{surge}	C_{XS}	$0.3 - 0.2f_T$	$0.2f_T - 0.3$	$-0.4f_T + 0.2$	$0.4f_T - 0.2$
	$a_{pitch\text{-}x}$	C_{XP}	-0.9	0.9	0.1	-0.1
	$g\sin\varphi$	C_{XG}	$0.4f_T + 0.4$	$-0.4f_T - 0.4$	-0.15	0.15
Transverse accelerations	a_{sway}	C_{YS}	0	0	0	0
	$a_{roll\text{-}y}$	C_{YR}	0	0	0	0
	$g\sin\theta$	C_{YG}	0	0	0	0
Vertical accelerations	a_{heave}	C_{ZH}	$0.8f_T - 0.15$	$0.15 - 0.8f_T$	0	0
	$a_{roll\text{-}z}$	C_{ZR}	0	0	0	0
	$a_{pitch\text{-}z}$	C_{ZP}	-0.9	0.9	0.1	-0.1

Table 11 : Load combination factors, LCFs for BSR and BSP load cases - Fatigue assessment

Load component		LCF	BSR-1P	BSR-2P	BSR-1S	BSR-2S
Hull girder loads	M_{WV}	C_{WV}	$0.1 - 0.2f_T$	$0.2f_T - 0.1$	$0.1 - 0.2f_T$	$0.2f_T - 0.1$
	Q_{WV}	C_{QW}	$(0.1-0.2f_T)\ f_{lp}$	$(0.2f_T - 0.1)\ f_{lp}$	$(0.1-0.2f_T)\ f_{lp}$	$(0.2f_T - 0.1)\ f_{lp}$
	M_{WH}	C_{WH}	$1.1 - f_T$	$f_T - 1.1$	$f_T - 1.1$	$1.1 - f_T$
	M_{WT}	C_{WT}	0	0	0	0
Longitudinal accelerations	a_{surge}	C_{XS}	0	0	0	0
	$a_{pitch\text{-}x}$	C_{XP}	0	0	0	0
	$g\sin\varphi$	C_{XG}	0	0	0	0
Transverse accelerations	a_{sway}	C_{YS}	$0.2 - 0.2f_T$	$0.2f_T - 0.2$	$0.2f_T - 0.2$	$0.2 - 0.2f_T$
	$a_{roll\text{-}y}$	C_{YR}	1	-1	-1	1
	$g\sin\theta$	C_{YG}	-1	1	1	-1
Vertical accelerations	a_{heave}	C_{ZH}	$0.7 - 0.4f_T$	$0.4f_T - 0.7$	$0.7 - 0.4f_T$	$0.4f_T - 0.7$
	$a_{roll\text{-}z}$	C_{ZR}	1	-1	-1	1
	$a_{pitch\text{-}z}$	C_{ZP}	0	0	0	0

Load component		LCF	BSP-1P	BSP-2P	BSP-1S	BSP-2S
Hull girder loads	M_{WV}	C_{WV}	$0.3 - 0.8f_T$	$0.8f_T - 0.3$	$0.3 - 0.8f_T$	$0.8f_T - 0.3$
	Q_{WV}	C_{QW}	$(0.3-0.8f_T)\ f_{lp}$	$(0.8f_T - 0.3)\ f_{lp}$	$(0.3-0.8f_T)\ f_{lp}$	$(0.8f_T - 0.3)\ f_{lp}$
	M_{WH}	C_{WH}	$0.6 - 0.6f_T$	$0.6f_T - 0.6$	$0.6f_T - 0.6$	$0.6 - 0.6f_T$
	M_{WT}	C_{WT}	0	0	0	0
Longitudinal accelerations	a_{surge}	C_{XS}	0	0	0	0
	$a_{pitch\text{-}x}$	C_{XP}	0	0	0	0
	$g\sin\varphi$	C_{XG}	0	0	0	0
Transverse accelerations	a_{sway}	C_{YS}	-0.95	0.95	0.95	-0.95
	$a_{roll\text{-}y}$	C_{YR}	0.3	-0.3	-0.3	0.3
	$g\sin\theta$	C_{YG}	-0.2	0.2	0.2	-0.2
Vertical accelerations	a_{heave}	C_{ZH}	1	-1	1	-1
	$a_{roll\text{-}z}$	C_{ZR}	0.3	-0.3	-0.3	0.3
	$a_{pitch\text{-}z}$	C_{ZP}	0	0	0	0

Table 12 : Load combination factors, LCFs for OST load cases - Fatigue assessment

Load component		LCF	OST-1P	OST-2P	OST-1S	OST-2S
Hull girder loads	M_{WV}	C_{WV}	-0.4	0.4	-0.4	0.4
	Q_{WV}	C_{QW}	-0.4 f_{lp}	0.4 f_{lp}	-0.4 f_{lp}	0.4 f_{lp}
	M_{WH}	C_{WH}	-0.9	0.9	0.9	-0.9
	M_{WT}	C_{WT}	- $f_{lp\text{-}OST}$	$f_{lp\text{-}OST}$	$f_{lp\text{-}OST}$	- $f_{lp\text{-}OST}$
Longitudinal accelerations	a_{surge}	C_{XS}	-0.25 + 0.2f_T	0.25 - 0.2f_T	-0.25 + 0.2f_T	0.25 - 0.2f_T
	$a_{pitch\text{-}x}$	C_{XP}	0.4 - 0.2f_T	-0.4 + 0.2f_T	0.4 - 0.2f_T	-0.4 + 0.2f_T
	$g\sin\varphi$	C_{XG}	-0.4 + 0.2f_T	0.4 - 0.2f_T	-0.4 + 0.2f_T	0.4 - 0.2f_T
Transverse accelerations	a_{sway}	C_{YS}	0	0	0	0
	$a_{roll\text{-}y}$	C_{YR}	-0.4 + 0.6f_T	0.4 - 0.6f_T	0.4 - 0.6f_T	-0.4 + 0.6f_T
	$g\sin\theta$	C_{YG}	0.2 - 0.3f_T	-0.2 + 0.3f_T	-0.2 + 0.3f_T	0.2 - 0.3f_T
Vertical accelerations	a_{heave}	C_{ZH}	-0.05	0.05	-0.05	0.05
	$a_{roll\text{-}z}$	C_{ZR}	-0.4 + 0.6f_T	0.4 - 0.6f_T	0.4 - 0.6f_T	-0.4 + 0.6f_T
	$a_{pitch\text{-}z}$	C_{ZP}	0.4 - 0.2f_T	-0.4 + 0.2f_T	0.4 - 0.2f_T	-0.4 + 0.2f_T

SECTION 3
SHIP MOTIONS AND ACCELERATIONS

SYMBOLS

For symbols not defined in this section, refer to Ch 1, Sec 4.

a_0 : Acceleration parameter, to be taken as:

$$a_0 = (1.58 - 0.47C_B)\left(\frac{2.4}{\sqrt{L}} + \frac{34}{L} - \frac{600}{L^2}\right)$$

T_θ : Roll period, in s, as defined in [2.1.1].

θ : Roll angle, in deg, as defined in [2.1.1].

T_φ : Pitch period, in s, as defined in [2.1.2].

φ : Pitch angle, in deg, as defined in [2.1.2].

R : Vertical coordinate, in m, of the ship rotation centre, to be taken as:

$$R = \min\left(\frac{D}{4} + \frac{T_{LC}}{2}, \frac{D}{2}\right)$$

C_{XG}, C_{XS}, C_{XP}, C_{YG}, C_{YS}, C_{YR}, C_{ZH}, C_{ZR}, *and* C_{ZP}: Load combination factors, as defined in Ch 4, Sec 2.

$a_{roll\text{-}y}$: Transverse acceleration due to roll, in m/s^2, as defined in [3.3.2].

$a_{pitch\text{-}x}$: Longitudinal acceleration due to pitch, in m/s^2, as defined in [3.3.1].

$a_{roll\text{-}z}$: Vertical acceleration due to roll, in m/s^2, as defined in [3.3.3].

$a_{pitch\text{-}z}$: Vertical acceleration due to pitch, in m/s^2, as defined in [3.3.3].

f_T : Ratio between draught at a loading condition and scantling draught, to be taken as:

$$f_T = \frac{T_{LC}}{T_{SC}} \text{ but is not to be taken less than 0.5.}$$

T_{LC} : Draught, in m, amidships for the considered load case

x, y, z : X, Y and Z coordinates, in m, of the considered point with respect to the coordinate system, as defined in Ch 4, Sec 1, [1.2.1].

f_{ps} : Coefficient for strength assessments which is dependant on the applicable design load scenario specified in Ch 4, Sec 7, and to be taken as:

f_{ps} = 1.0 for extreme sea loads design load scenario.

f_{ps} = 0.8 for the ballast water exchange design load scenario.

f_{ps} = 0.8 for the accidental flooded design load scenario at sea.

f_{ps} = 0.4 for the harbour/sheltered water design load scenario.

f_{fa} : Fatigue coefficient to be taken as:

f_{fa} = 0.9

1 GENERAL

1.1 Definition

1.1.1

The ship motions and accelerations are assumed to be sinusoidal. The motion values defined by the formulae in this section are single amplitudes, i.e. half of the 'crest to trough' height.

2 SHIP MOTIONS AND ACCELERATIONS

2.1 Ship motions

2.1.1 Roll motion

The roll period T_θ, in s, to be taken as:

$$T_\theta = \frac{2.3\pi\ k_r}{\sqrt{g\ GM}}$$

The roll angle θ, in deg, to be taken as:

$$\theta = \frac{9000\,(1.25 - 0.025T_\theta)\ f_p\ f_{BK}}{(B+75)\pi}$$

where:

f_p : Coefficient to be taken as:

$f_p = f_{ps}$ for strength assessment.

$f_p = f_{fa}(0.23 - 4f_T\ B \times 10^{-4})$ for fatigue assessment.

f_{BK} : To be taken as:

$f_{BK} = 1.2$ for ships without bilge keel.

$f_{BK} = 1.0$ for ships with bilge keel.

k_r : Roll radius of gyration, in m, in the considered loading condition. The values in Table 1 or Table 2 are to be adopted.

GM : Metacentric height, in m, in the considered loading condition. The values in Table 1 or Table 2 are to be adopted.

Table 1 : k_r and GM values for oil tankers

Loading condition (1) (2)	T_{LC}	k_r	GM
Full load condition	T_{SC}	0.35B	0.12B
Optional conditions that have a draught greater than 0.9T_{SC}	Actual draught but ≥ 0.9T_{SC}	0.35B	0.12B
Partial load condition	≤ 0.6T_{SC}	0.40B	0.24B
Ballast condition	T_{BAL}	0.45B	0.33B

(1) For optional loading conditions or gale/emergency ballast conditions with draught between 0.6T_{SC} and 0.9T_{SC}, the values of k_r and GM, unless provided in the loading manual, are to be obtained by linear interpolation between the optional condition at 0.9T_{SC} and the partial load condition at 0.6T_{SC} based on the actual draught.

(2) For flooded loading conditions, the values of k_r and GM, unless provided in the loading manual, are to be taken as those for the full load condition.

Table 2 : k_r and *GM* values for bulk carriers

Loading condition (1) (2) (4)		Application	T_{LC}	k_r	*GM*
Full load condition	Homogeneous loading	All bulk carriers	T_{SC}	0.35*B*	0.12*B*
	Alternate heavy cargo	BC-A		0.40*B*	0.20*B*
	Alternate light cargo	BC-A		0.35*B*	0.12*B*
	Homogeneous heavy cargo	BC-B, BC-A		0.42*B*	0.25*B*
Steel coil loading (3)		All bulk carriers designated for the carriage of steel products		0.42*B*	0.25*B*
Heavy ballast condition		All bulk carriers	$T_{BAL\text{-}H}$	0.40*B*	0.25*B*
Normal ballast condition		All bulk carriers	T_{BAL}	0.45*B*	0.33*B*

(1) For Multi-port (MP) loading conditions with draught greater than or equal to $0.9T_{SC}$, the values of k_r and *GM*, unless provided in the loading manual, are to be taken as those from the most appropriate full load condition.

For Multi-port (MP) loading conditions with draught between $T_{BAL\text{-}H}$ and $0.9T_{SC}$, the values of k_r and *GM*, unless provided in the loading manual, are to be obtained by linear interpolation, based on the draught, between the heavy ballast condition and the most appropriate full load condition.

For Multi-port (MP) loading conditions with a draught below $T_{BAL\text{-}H}$, the values of k_r and *GM* for the heavy ballast condition are to be used.

(2) For flooded loading conditions, the values of k_r and *GM*, unless provided in the loading manual, are to be taken as those for the full load condition.

(3) When steel coil loading condition is provided by the designer according to Ch 1, Sec 2, [3.6] in the loading manual, this condition is to be assessed with draught, k_r and *GM* values given in this table.

(4) Block Loading conditions are to be assessed with draught, k_r and *GM* values given in this table for Homogeneous heavy cargo loading condition.

2.1.2 Pitch motion

The pitch period T_φ, in s, is to be taken as:

$$T_\varphi = \sqrt{\frac{2\pi\,\lambda_\varphi}{g}}$$

where:

$$\lambda_\varphi = 0.6\,(1 + f_T)\,L$$

The pitch angle φ, in deg, is to be taken as:

$$\varphi = 1350\,f_p\,L^{-0.94}\left\{1.0 + \left(\frac{2.57}{\sqrt{gL}}\right)^{1.2}\right\}$$

where:

f_p : Coefficient to be taken as:

$f_p = f_{ps}$ for strength assessment.

$f_p = f_{fa}[(0.27 - 0.02f_T) - (13 - 5f_T)\,L \times 10^{-5}]$ for fatigue assessment.

2.2 Ship accelerations at the centre of gravity

2.2.1 Surge acceleration

The longitudinal acceleration due to surge, in m/s^2, is to be taken as:

$$a_{surge} = 0.2\,f_p\,a_0\,g$$

where:

f_p : Coefficient to be taken as:

$f_p = f_{ps}$ for strength assessment.

$f_p = f_{fa}[0.27 - (15 + 4f_T)\ L \times 10^{-5}]$ for fatigue assessment.

2.2.2 Sway acceleration

The transverse acceleration due to sway, in m/s^2, is to be taken as:

$$a_{sway} = 0.3\ f_p\ a_0\ g$$

where:

f_p : Coefficient to be taken as:

$f_p = f_{ps}$ for strength assessment.

$f_p = f_{fa}[0.24 - (6 - 2f_T)\ B \times 10^{-4}]$ for fatigue assessment.

2.2.3 Heave acceleration

The vertical acceleration due to heave, in m/s^2, is to be taken as:

$$a_{heave} = f_p\ a_0\ g$$

where:

f_p : Coefficient to be taken as:

$f_p = f_{ps}$ for strength assessment.

$f_p = f_{fa}[(0.27 + 0.02f_T) - 17L \times 10^{-5}]$ for fatigue assessment.

2.2.4 Roll acceleration

The roll acceleration, a_{roll}, in rad/s^2, is to be taken as:

$$a_{roll} = f_p\ \theta\ \frac{\pi}{180}\left(\frac{2\pi}{T_\theta}\right)^2$$

where:

θ : Roll angle using f_p equal to 1.0.

f_p : Coefficient to be taken as:

$f_p = f_{ps}$ for strength assessment.

$f_p = f_{fa}[0.23 - 4f_T\ B \times 10^{-4}]$ for fatigue assessment.

2.2.5 Pitch acceleration

The pitch acceleration, a_{pitch}, in rad/s^2, is to be taken as:

$$a_{pitch} = f_p\left(\frac{3.1}{\sqrt{gL}} + 1.0\right)\ \varphi\ \frac{\pi}{180}\left(\frac{2\pi}{T_\varphi}\right)^2$$

where:

φ : Pitch angle using f_p equal to 1.0.

f_p : Coefficient to be taken as:

$f_p = f_{ps}$ for strength assessment.

$f_p = f_{fa}[0.28 - (5 + 6f_T)\ L \times 10^{-5}]$ for fatigue assessment.

3 ACCELERATIONS AT ANY POSITION

3.1 General

3.1.1

The accelerations used to derive the inertial loads at any position are defined with respect to the ship fixed coordinate system. Hence the acceleration values defined in [3.2] and [3.3] include the gravitational acceleration components due to the instantaneous roll and pitch angles.

3.1.2

The accelerations to be applied for the dynamic load cases defined in Ch 4, Sec 2 are given in [3.2].

3.1.3

The envelope accelerations as defined in [3.3] are provided for advisory purposes and may be used for other design purpose when the maximum design acceleration values are required, for example, crane foundations, machinery foundations, etc.

3.2 Accelerations for dynamic load cases

3.2.1 General

The accelerations to be applied for the dynamic load cases defined in Ch 4, Sec 2 are given in [3.2.2] to [3.2.4].

3.2.2 Longitudinal acceleration

The longitudinal acceleration at any position for each dynamic load case, in m/s^2, is to be taken as:

$$a_X = -C_{XG}\, g\, \sin\varphi + C_{XS}\, a_{surge} + C_{XP}\, a_{pitch}(z - R)$$

3.2.3 Transverse acceleration

The transverse acceleration at any position for each dynamic load case, in m/s^2, is to be taken as:

$$a_Y = C_{YG}\, g\, \sin\theta + C_{YS}\, a_{sway} - C_{YR}\, a_{roll}(z - R)$$

3.2.4 Vertical acceleration

The vertical acceleration at any position for each dynamic load case, in m/s^2, is to be taken as:

$$a_Z = C_{ZH}\, a_{heave} + C_{ZR}\, a_{roll}\, y - C_{ZP}\, a_{pitch}^{\cdot}\, (x - 0.45L)$$

3.3 Envelope accelerations

3.3.1 Longitudinal acceleration

The envelope longitudinal acceleration, $a_{x\text{-}env}$, in m/s^2, at any position, is to be taken as:

$$a_{x-env} = 0.7\sqrt{a_{surge}^{\;2} + \left[\frac{L}{325}\,(g\sin\varphi + a_{pitch-x})\right]^2}$$

where:

$a_{pitch\text{-}x}$: Longitudinal acceleration due to pitch, in m/s^2

$$a_{pitch-x} = a_{pitch}\,(z - R)$$

3.3.2 Transverse acceleration

The envelope transverse acceleration, $a_{y\text{-}env}$, in m/s^2, at any position, is to be taken as:

$$a_{y-env} = \sqrt{a_{sway}{}^2 + (g\ \sin\theta + a_{roll-y})^2}$$

where:

$a_{roll\text{-}y}$: Transverse acceleration due to roll, in m/s^2.

$$a_{roll-y} = a_{roll}\ (z - R)$$

3.3.3 Vertical acceleration

The envelope vertical acceleration, $a_{z\text{-}env}$, in m/s^2, at any position, is to be taken as:

$$a_{z-env} = \sqrt{a_{heave}{}^2 + \left(\left(0.3 + \frac{L}{325}\right)\ a_{pitch-z}\right)^2 + (1.2\,a_{roll-z})^2}$$

where:

$a_{picth\text{-}z}$: Vertical acceleration due to pitch, in m/s^2.

$$a_{pitch-z} = a_{pitch}\ (x - 0.45L)$$

$a_{roll\text{-}z}$: Vertical acceleration due to roll, in m/s^2.

$$a_{roll-z} = a_{roll}\ y$$

SECTION 4
HULL GIRDER LOADS

SYMBOLS

For symbols not defined in this section, refer to Ch 1, Sec 4.

x : X coordinate, in m, of the calculation point with respect to the reference coordinate system defined in Ch 4, Sec 1, [1.2.1].

C_w : Wave coefficient, to be taken as:

$$C_w = 10.75 - \left(\frac{300 - L}{100}\right)^{1.5} \quad \text{for } 90m \le L \le 300m$$

$$C_w = 10.75 \quad \text{for } 300m < L \le 350m$$

$$C_w = 10.75 - \left(\frac{L - 350}{150}\right)^{1.5} \quad \text{for } 350m < L \le 500m$$

f_β : Heading correction factor, to be taken as:

- For strength assessment:

  f_β = 1.05 for HSM and FSM load cases for the extreme sea loads design load scenario.

  f_β = 0.8 for BSR and BSP load cases for the extreme sea loads design load scenario.

  f_β = 1.0 for HSA, OST and OSA load cases for the extreme sea loads design load scenario.

  f_β = 1.0 for ballast water exchange at sea, harbour/sheltered water and accidental flooded design load scenarios.

- For fatigue assessment:

  f_β = 1.0.

f_{ps} : Coefficient, as defined in Ch 4, Sec 3.

BSR, *BSP*, *HSM*, *HSA*, *FSM*, *OST*, *OSA* : Dynamic load cases, as defined in Ch 4, Sec 2.

1 APPLICATION

1.1 General

1.1.1

The hull girder loads for the static (S) design load scenarios is to be taken as the still water loads defined in [2].

1.1.2

The total hull girder loads for the static plus dynamic (S+D) design load scenarios are to be derived for each dynamic load case and are to be taken as the sum of the still water loads defined in [2] and the dynamic loads defined in [3.5].

2 VERTICAL STILL WATER HULL GIRDER LOADS

2.1 General

2.1.1 Seagoing and harbour/sheltered water conditions

The designer is to provide the permissible still water bending moment and shear force for seagoing and harbour/sheltered water operations.

The permissible still water hull girder loads are to be given at each transverse bulkhead in the cargo hold region, at the middle of cargo compartments, at the collision bulkhead, at the engine room forward bulkhead and at the mid-point between the forward and aft engine room bulkheads. The permissible hull girder bending moments and shear forces at any other position may be obtained by linear interpolation.

Note 1: It is recommended that, for initial design, the permissible hull girder hogging and sagging still water bending moments are at least 5% above the maximum still water bending moment from loading conditions in the loading manual, and the permissible hull girder shear forces are at least 10% above the maximum still water shear force from loading condition in the loading manual, to account for growth and design margins during the design and construction phase of the ship.

2.1.2 Flooded condition

The designer is to provide the envelope of permissible still water bending moment and shear force in flooded condition.

2.1.3 Still water loads for the fatigue assessment

The still water bending moment and shear force values and distribution to be used for the fatigue assessment are to be taken as the most typical values applicable for the loading conditions that the ship will operate in for most of its life. Typically, these conditions will be the normal ballast condition and full homogeneously loaded condition for double hull oil tankers. For bulk carriers, these will be the normal ballast condition, heavy ballast condition, full homogeneously loaded condition and full alternate loaded condition; note the latter is only applicable to BC-A bulk carriers. The definition of loading conditions to use is specified in Ch 9.

2.2 Vertical still water bending moment

2.2.1 Minimum still water bending moment

The minimum still water bending moment, $M_{sw\text{-}h\text{-}min}$ and $M_{sw\text{-}s\text{-}min}$, in kNm, in hogging and sagging condition, respectively is to be taken as:

Hogging conditions:

$$M_{sw-h-min} = f_{sw}\ (171 C_w\ L^2\ B(C_B + 0.7)\ 10^{-3} - M_{wv-h-mid})$$

Sagging conditions:

$$M_{sw-s-min} = -0.85 f_{sw}\ (171 C_w\ L^2\ B(C_B + 0.7)\ 10^{-3} + M_{wv-s-mid})$$

where:

$M_{wv\text{-}h\text{-}mid}$: Vertical wave bending moment for strength assessment in hogging condition, as defined in [3.1.1] using f_p and f_m equal to 1.0.

$M_{wv\text{-}s\text{-}mid}$: Vertical wave bending moment for strength assessment in sagging condition, as defined in [3.1.1] using f_p and f_m equal to 1.0.

f_{sw} : Distribution factor along the ship length. To be taken as, see Figure 1:

f_{sw} = 0.0 for $x \le 0$
f_{sw} = 0.15 at $x = 0.1\,L$
f_{sw} = 1.0 for $0.3\,L \le x \le 0.7\,L$
f_{sw} = 0.15 at $x = 0.9\,L$
f_{sw} = 0.0 for $x \ge L$

Intermediate values of f_{sw} are to be obtained by linear interpolation.

Figure 1 : Distribution factor f_{sw}

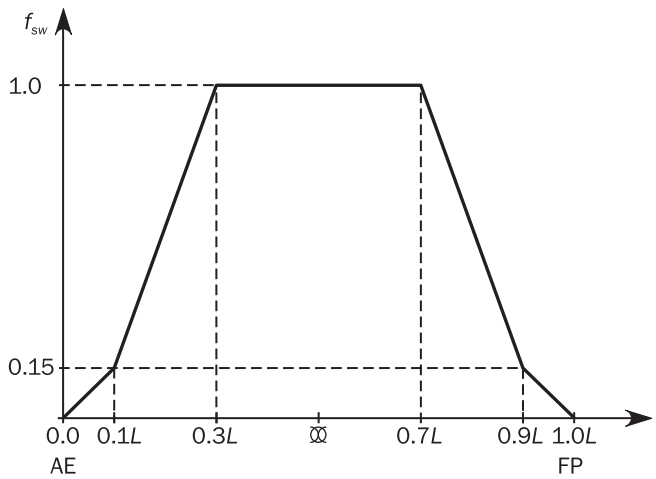

2.2.2 Permissible vertical still water bending moment in seagoing condition

The permissible vertical still water bending moments, $M_{sw\text{-}h}$ and $M_{sw\text{-}s}$ in seagoing condition at any longitudinal position are to envelop:

- The most severe still water bending moments calculated, in hogging and sagging conditions, respectively, for the seagoing loading conditions defined in Ch 4, Sec 8.
- The most severe still water bending moments for the seagoing loading conditions defined in the loading manual.
- The minimum still water bending moment defined in [2.2.1]

2.2.3 Permissible vertical still water bending moment in harbour/sheltered water and tank testing condition

The permissible vertical still water bending moments in the harbour/sheltered water and tank testing condition $M_{sw\text{-}p\text{-}h}$ and $M_{sw\text{-}p\text{-}s}$ at any longitudinal position are to envelop:

- The most severe still water bending moments, in hogging and sagging conditions, respectively, for the harbour/sheltered water loading conditions defined in Ch 4, Sec 8.
- The most severe still water bending moments for the harbour/sheltered water loading conditions defined in the loading manual.
- The permissible still water bending moment defined in [2.2.2].
- The minimum still water bending moment defined in [2.2.1] increased by 25%.

2.2.4 Permissible vertical still water bending moment in flooded condition at sea

The permissible vertical still water bending moments in flooded condition $M_{sw\text{-}f}$ at any longitudinal position are to envelop:

- The most severe still water bending moments, in hogging and sagging conditions, respectively, for the intact and flooded seagoing loading conditions defined in Ch 4, Sec 8. Loading conditions encountered during ballast water exchange need not to be considered for the flooded condition.
- The most severe still water bending moments for the intact and flooded seagoing loading conditions defined in the loading manual.
- The permissible still water bending moment defined in [2.2.2] increased by 10%.

2.3 Vertical still water shear force

2.3.1 Minimum still water shear force in seagoing conditions for oil tankers

The minimum hull girder positive and negative vertical still water shear force, $Q_{sw\text{-}min}$ in kN, in way of transverse bulkheads between cargo tanks in the seagoing condition is to be taken as:

a) For oil tankers with three cargo tanks across the breadth of the ship:

$$Q_{sw-min} = \pm max \begin{cases} 0.225\rho g\ B_{local}\ \ell_{tk}\ T_{SC} \\ 0.5\rho g\ [0.98\ (V_{CT} + 2V_{ST}) - 0.7B_{local}\ \ell_{tk}\ T_{SC}] \end{cases}$$

and is to be taken as the maximum value of $Q_{sw\text{-}min}$ calculated for cargo/ballast tanks forward and aft of the transverse bulkhead.

b) For oil tankers with two cargo tanks across the breadth of the ship:

$$Q_{sw-min} = \pm 0.4\rho g\ B_{local}\ \ell_{tk}\ T_{SC}$$

and is to be taken as maximum value of $Q_{sw\text{-}min}$ calculated for cargo/ballast tanks forward and aft of the transverse bulkhead.

where:

B_{local} : Local breadth, in m, at T_{SC} at the middle length of the tank under consideration.

ℓ_{tk} : Length of cargo tank under consideration, in m, taken at the forward or aft side of the transverse bulkhead under consideration, in m.

V_{CT} : Volume of centre cargo tank, in m^3, taken for the cargo tank on the forward or aft side of the transverse bulkhead under consideration.

V_{ST} : Volume of side cargo tank, in m^3, taken for the cargo tank on the forward or aft side of the transverse bulkhead under consideration.

2.3.2 Minimum still water shear force in harbour/sheltered water conditions for oil tankers

The minimum hull girder positive and negative vertical still water shear force, $Q_{sw\text{-}p\text{-}min}$ in kN in the harbour/sheltered water condition in way of transverse bulkheads between cargo tanks are to be taken as:

a) For oil tankers with three cargo tanks across the breadth of the ship:

$$Q_{sw-p-min} = \pm max \begin{cases} 0.275\rho g\ B_{local}\ \ell_{tk}\ T_{SC} \\ 0.5\rho g\ [0.98\ (V_{CT} + 2V_{ST}) - 0.6B_{local}\ \ell_{tk}\ T_{SC}] \end{cases}$$

and is to be taken as the maximum value of $Q_{sw\text{-}p\text{-}min}$ calculated for cargo/ballast tanks forward and aft of the transverse bulkhead.

b) For oil tankers with two cargo tanks across the breadth of the ship:

$$Q_{sw-min} = \pm 0.45 \rho g \, B_{local} \, \ell_{tk} \, T_{SC}$$

and is to be taken as maximum value of $Q_{sw\text{-}p\text{-}min}$ calculated for cargo/ballast tanks forward and aft of the transverse bulkhead.

2.3.3 Permissible still water shear force in seagoing condition

The permissible vertical still water shear forces, Q_{sw} for oil tankers and bulk carriers, in seagoing condition at any longitudinal position are to envelop:

- The most severe still water shear forces, positive or negative, for the seagoing loading conditions defined in Ch 4, Sec 8 after shear force correction in case of bulk carrier.
- The most severe still water shear forces for the seagoing loading conditions defined in the loading manual after shear force correction in case of bulk carrier.
- For oil tankers, the minimum still water shear forces for seagoing conditions defined in [2.3.1].

2.3.4 Permissible still water shear force in harbour/sheltered water and tank testing condition

The permissible vertical still water shear forces, $Q_{sw\text{-}p}$ for oil tankers and bulk carriers, in the harbour/sheltered water and tank testing condition at any longitudinal position are to envelop:

- The most severe still water shear forces, positive or negative, for the harbour/sheltered water loading conditions defined in Ch 4, Sec 8 after shear force correction in case of bulk carrier.
- The most severe still water shear forces for the harbour/sheltered water loading conditions defined in the loading manual after shear force correction in case of bulk carrier.
- The permissible vertical still water shear force defined in [2.3.3].
- For oil tankers, the minimum still water shear forced for harbour/sheltered water conditions defined in [2.3.2].

The following value may be used as guidance at preliminary design stage:

$$Q_{sw-p} = Q_{sw} + 0.6 Q_{wv}$$

where:

Q_{sw} : Permissible still water shear force Q_{sw}, as defined in [2.3.3].

Q_{wv} : Vertical wave shear force for strength assessment $Q_{wv\text{-}pos}$ and $Q_{wv\text{-}neg}$, as defined in [3.2.1] using f_p equal to 1.0.

2.3.5 Permissible still water shear force in flooded condition at sea

The permissible vertical still water shear forces, $Q_{sw\text{-}f}$ for oil tankers and bulk carriers, in flooded condition at any longitudinal position are to envelop:

- The most severe still water shear forces, positive or negative, for the flooded seagoing loading conditions defined in Ch 4, Sec 8 after shear force correction in case of bulk carrier. Loading conditions encountered during ballast water exchange need not to be considered for the flooded condition.
- The most severe still water shear forces for the flooded seagoing loading conditions defined in the loading manual after shear force correction in case of bulk carrier.
- The permissible still water shear force is defined in [2.3.3].

3 DYNAMIC HULL GIRDER LOADS

3.1 Vertical wave bending moment

3.1.1

The vertical wave bending moments at any longitudinal position, in kNm, are to be taken as:

Hogging condition:

$$M_{wv-h} = 0.19 f_{nl-vh}\, f_m\, f_p\, C_w\, L^2\, BC_B$$

Sagging condition:

$$M_{wv-s} = -0.19 f_{nl-vs}\, f_m\, f_p\, C_w\, L^2\, BC_B$$

where:

$f_{nl\text{-}vh}$: Coefficient considering nonlinear effects applied to hogging, to be taken as:

$f_{nl\text{-}vh}$ = 1.0 for strength and fatigue assessment.

$f_{nl\text{-}vs}$: Coefficient considering nonlinear effects applied to sagging, to be taken as:

$f_{nl\text{-}vs} = 0.58\left(\dfrac{C_B + 0.7}{C_B}\right)$ for strength assessment.

$f_{nl\text{-}vs} = 1.0$ for fatigue assessment.

f_p : Coefficient to be taken as:

$f_p = f_{ps}$ for strength assessment.

$f_p = 0.9[0.27 - (6 + 4f_T)\, L \times 10^{-5}]$ for fatigue assessment.

f_m : Distribution factor for vertical wave bending moment along the ship's length, to be taken as:

$f_m = 0.0$ for $x \le 0$
$f_m = 1.0$ for $0.4\,L \le x \le 0.65\,L$
$f_m = 0.0$ for $x \ge L$

Intermediate values of f_m are to be obtained by linear interpolation (see Figure 2).

Figure 2 : Distribution factor f_{mm}

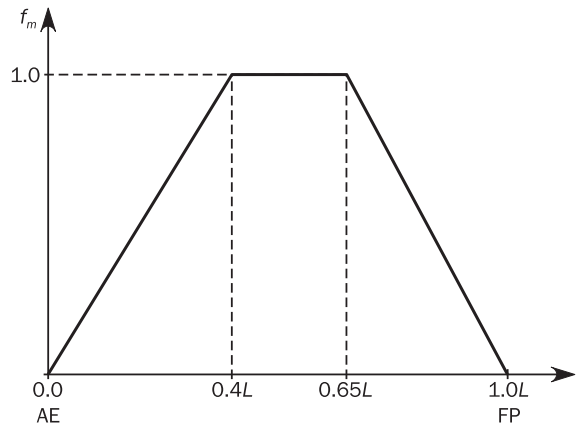

3.2 Vertical wave shear force

3.2.1

The vertical wave shear forces at any longitudinal position, in kN, are to be taken as:

$Q_{wv-pos} = 0.52 f_{q-pos}\ f_p\ C_w\ LBC_B$

$Q_{wv-neg} = -0.52 f_{q-neg}\ f_p\ C_w\ LBC_B$

where:

f_p : Coefficient to be taken as:

$f_p = f_{ps}$ for strength assessment.

$f_p = 0.9[0.27 - (17 - 8f_T)\ L \times 10^{-5}]$ for fatigue assessment.

$f_{q\text{-}pos}$: Distribution factor along the ship length for positive wave shear force, to be taken as:

$f_{q\text{-}pos} = 0.0$ for $x \le 0$

$f_{q\text{-}pos} = 0.92\ f_{nl-vh}$ for $0.2\ L \le x \le 0.3\ L$

$f_{q\text{-}pos} = 0.7$ for $0.4\ L \le x \le 0.6\ L$

$f_{q\text{-}pos} = 1.0\ f_{nl-vs}$ for $0.7\ L \le x \le 0.85\ L$

$f_{q\text{-}pos} = 0.0$ for $x \ge L$

Intermediate values of $f_{q\text{-}pos}$ are to be obtained by linear interpolation (see Figure 3).

$f_{q\text{-}neg}$: Distribution factor along the ship length for negative wave shear force, to be taken as:

$f_{q\text{-}neg} = 0.0$ for $x \le 0$

$f_{q\text{-}neg} = 0.92\ f_{nl-vs}$ for $0.2L \le x \le 0.3\ L$

$f_{q\text{-}neg} = 0.7$ for $0.4L \le x \le 0.6\ L$

$f_{q\text{-}neg} = 1.0\ f_{nl-vh}$ for $0.7L \le x \le 0.85\ L$

$f_{q\text{-}neg} = 0.0$ for $x \ge L$

Intermediate values of $f_{q\text{-}neg}$ are to be obtained by linear interpolation, see Figure 4.

$f_{nl\text{-}vh}$, $f_{nl\text{-}vs}$: Coefficient considering nonlinear effects defined in [3.1.1].

Figure 3 : Distribution factor of positive vertical shear force $f_{q\text{-}pos}$

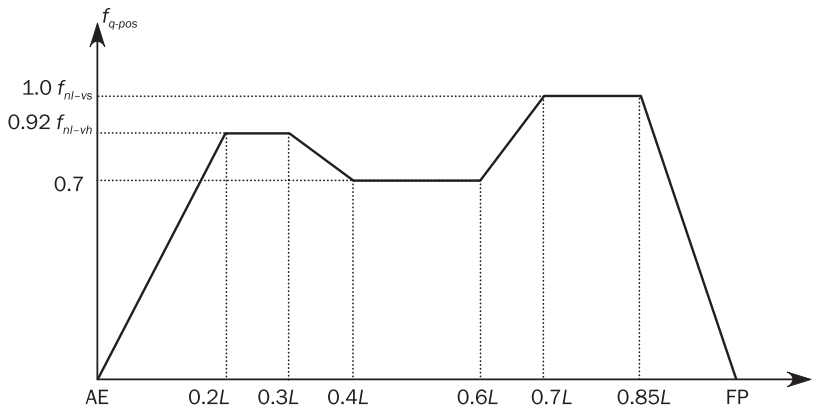

Figure 4 : Distribution factor of negative vertical shear force $f_{q\text{-}neg}$

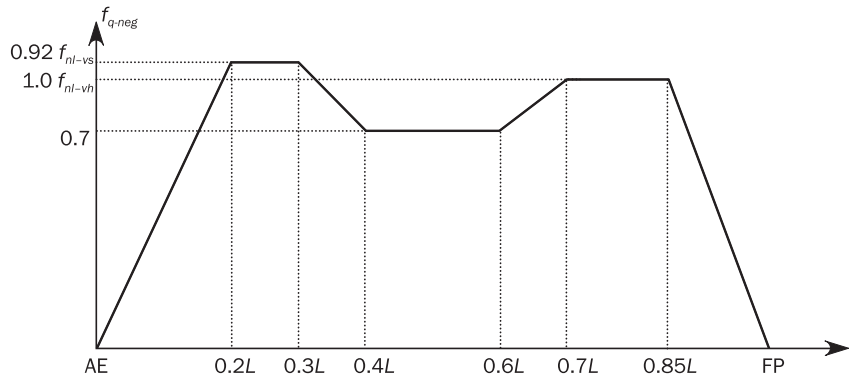

3.3 Horizontal wave bending moment

3.3.1

The horizontal wave bending moment at any longitudinal position, in kNm, is to be taken as:

$$M_{wh} = f_{nlh} f_p \left(0.31 + \frac{L}{2800}\right) f_m \, C_w \, L^2 \, T_{LC} \, C_B$$

where:

f_{nlh} : Coefficient considering nonlinear effect to be taken as:

f_{nlh} = 0.9 for strength assessment

f_{nlh} = 1.0 for fatigue assessment

f_p : Coefficient to be taken as:

$f_p = f_{ps}$ for strength assessment.

$f_p = 0.9 \cdot [(0.2 + 0.04 f_T) + (11 - 8 f_T) \, L \times 10^{-5}]$ for fatigue assessment.

f_m : Distribution factor defined in [3.1.1].

3.4 Wave torsional moment

3.4.1

The wave torsional moment at any longitudinal position with respect to the ship baseline, in kNm, is to be taken as:

$$M_{wt} = f_p (M_{wt1} + M_{wt2})$$

where:

$$M_{wt1} = 0.4 f_{t1} \, C_w \sqrt{\frac{L}{T_{LC}}} \, B^2 \, DC_B$$

$$M_{wt2} = 0.22 f_{t2} \, C_w \, LB^2 \, C_B$$

f_{t1}, f_{t2} : Distribution factors, taken as:

$f_{t1} = 0$ for $x < 0$

$f_{t1} = \left|\sin\left(\frac{2\pi x}{L}\right)\right|$ for $0 \le x \le L$

$f_{t1} = 0$ for $x > L$

$f_{t2} = 0$ for $x < 0$

$f_{t2} = sin^2\left(\frac{\pi x}{L}\right)$ for $0 \le x \le L$

$f_{t2} = 0$ for $x > L$

f_p : Coefficient to be taken as:

$f_p = f_{ps}$ for strength assessment.

$f_p = 0.9[0.2 + (5 f_T - 4.25) \, B \times 10^{-4}]$ for fatigue assessment.

3.5 Hull girder loads for dynamic load cases

3.5.1 General

The dynamic hull girder loads to be applied for the dynamic load cases defined in Ch 4, Sec 2, are given in [3.5.2] to [3.5.5].

3.5.2 Vertical wave bending moment

The vertical wave bending moment, $M_{wv\text{-}LC}$, in kNm, to be used for each dynamic load case in Ch 4, Sec 2, is defined in Table 1.

Table 1 : Vertical wave bending moment for dynamic load cases

Load combination factor	$M_{wv\text{-}LC}$
$C_{WV} \geq 0$	$f_\beta\ C_{WV}\ M_{wv-h}$
$C_{WV} < 0$	$f_\beta\ C_{WV}\ \lvert M_{wv-s} \rvert$

where:

C_{WV} : Load combination factor for vertical wave bending moment, to be taken as specified in Ch 4, Sec 2.

$M_{wv\text{-}h}$, $M_{wv\text{-}s}$: Hogging and sagging vertical wave bending moment taking account of the considered design load scenario, as defined in [3.1.1].

3.5.3 Vertical wave shear force

The vertical wave shear force, $Q_{wv\text{-}LC}$, in kN, to be used for each dynamic load case in Ch 4, Sec 2, is defined in Table 2.

Table 2 : Vertical wave shear force for dynamic load cases

Load combination factor	$Q_{wv\text{-}LC}$
$C_{QW} \geq 0$	$f_\beta\ C_{QW}\ Q_{wv-pos}$
$C_{QW} < 0$	$f_\beta\ C_{QW}\ \lvert Q_{wv-neg} \rvert$

where:

C_{QW} : Load combination factor for vertical wave shear force, to be taken as specified in Ch 4, Sec 2.

$Q_{wv\text{-}pos}$, $Q_{wv\text{-}neg}$: Positive and negative vertical wave shear force taking account of the considered design load scenario, as defined in [3.2.1].

3.5.4 Horizontal wave bending moment

The horizontal wave bending moment, $M_{wh\text{-}LC}$, in kNm, to be used for each dynamic load case defined in Ch 4, Sec 2, is to be taken as:

$$M_{wh-LC} = f_\beta\ C_{WH}\ M_{wh}$$

where:

C_{WH} : Load combination factor for horizontal wave bending moment, to be taken as specified in Ch 4, Sec 2.

M_{wh} : Horizontal wave bending moment taking account of the appropriate design load scenario, as defined in [3.3.1].

3.5.5 Wave torsional moment

The wave torsional moment, $M_{wt\text{-}LC}$, in kNm, to be used for each dynamic load case defined in Ch 4, Sec 2, is to be taken as:

$$M_{wt-LC} = f_\beta\ C_{WT}\ M_{wt}$$

where:

C_{WT} : Load combination factor for wave torsional moment, to be taken as specified in Ch 4, Sec 2.

M_{wt} : Wave torsional moment taking account of the appropriate design load scenario, as defined in [3.4.1].

SECTION 5
EXTERNAL LOADS

SYMBOLS

For symbols not defined in this section, refer to Ch 1, Sec 4.

λ : Wave length, in m.

B_x : Moulded breadth at the waterline, in m, at the considered cross section.

x, y, z : X, Y and Z coordinates, in m, of the load point with respect to the reference coordinate system defined in Ch 4, Sec 1, [1.2.1].

f_{xL} : Ratio as defined in Ch 4, Sec 2.

f_{yB} : Ratio between Y-coordinate of the load point and B_x, to be taken as:

$$f_{yB} = \frac{|2y|}{B_x}$$, but not greater than 1.0.

f_{yB} = 1.0 when B_x = 0.

f_{yB1} : Ratio between Y-coordinate of the load point and B, to be taken as:

$$f_{yB1} = \frac{|2y|}{B}$$, but not greater than 1.0

C_w : Wave coefficient defined in Ch 4, Sec 4.

f_T : Ratio as defined in Ch 4, Sec 3.

$P_{W,WL}$: Wave pressure at the waterline, kN/m^2, for the considered dynamic load case.

$P_{W,WL} = P_W$ for $y = B_X/2$ and $z = T_{LC}$

h_W : Water head equivalent to the pressure at waterline, in m, to be taken as:

$$h_W = \frac{P_{W,WL}}{\rho g}$$

f_{ps} : Coefficient for strength assessment, as defined in Ch 4, Sec 3.

θ : Roll angle, in deg, as defined in Ch 4, Sec 3, [2.1.1].

T_θ : Roll period, in s, as defined in Ch 4, Sec 3, [2.1.1].

f_{fa} : Coefficient defined in Ch 4, Sec 3.

f_β : Coefficient defined in Ch 4, Sec 4.

z_{SD} : Z coordinate, in m, of the midpoint of stiffener span, or of the middle of the elementary plate panel.

[RCN1 to 01 JAN 2020]

1 SEA PRESSURE

1.1 Total pressure

1.1.1

The external pressure P_{ex} at any load point of the hull, in kN/m^2, for the static (S) design load scenarios, is to be taken as:

$P_{ex} = P_S$ but not less than 0.

The total pressure P_{ex} at any load point of the hull for the static plus dynamic (S+D) design load scenarios, is to be derived from each dynamic load case and is to be taken as:

$P_{ex} = P_S + P_W$ but not less than 0.

where:

P_S : Hydrostatic pressure, in kN/m^2, defined in [1.2].

P_W : Wave pressure, in kN/m^2, is defined in [1.3].

1.2 Hydrostatic pressure

1.2.1

The hydrostatic pressure, P_S at any load point, in kN/m^2, is obtained from Table 1. See also Figure 1.

Table 1 : Hydrostatic pressure, P_S

Location	Hydrostatic Pressure, P_S, in kN/m^2
$z \le T_{LC}$	$\rho\, g\, (T_{LC} - z)$
$z > T_{LC}$	0

Figure 1 : Hydrostatic pressure, P_S

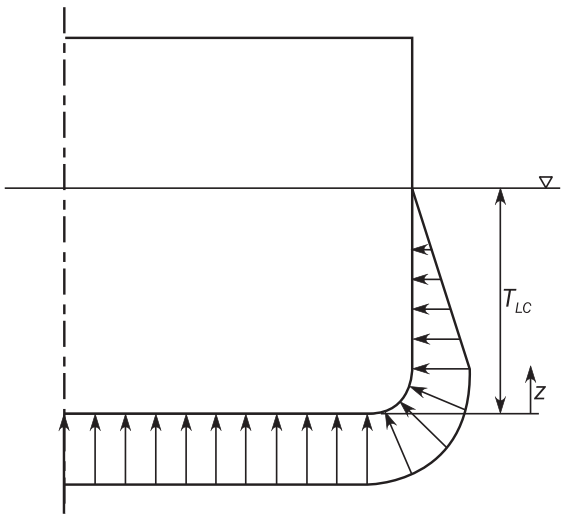

1.3 External dynamic pressures for strength assessment

1.3.1 General

The hydrodynamic pressures for each dynamic load case defined in Ch 4, Sec 2, [2] are defined in [1.3.2] to [1.3.8].

1.3.2 Hydrodynamic pressures for HSM load cases

The hydrodynamic pressures, P_W, for HSM-1 and HSM-2 load cases, at any load point, in kN/m^2, are to be obtained from Table 2. See also Figure 2 and Figure 3.

Table 2 : Hydrodynamic pressures for HSM load cases

	Wave pressure, in kN/m^2		
Load case	$z \le T_{LC}$	$T_{LC} < z \le h_W + T_{LC}$	$z > h_W + T_{LC}$
HSM-1	$P_W = max\ (-P_{HS}, \rho g\ (z - T_{LC}))$	$P_W = P_{W,WL} - \rho g(z - T_{LC})$	$P_W = 0.0$
HSM-2	$P_W = max\ (P_{HS}, \rho g\ (z - T_{LC}))$		

where:

$$P_{HS} = f_\beta\ f_{ps}\ f_{nl}\ f_h\ k_a\ k_p\ f_{yz}\ C_w \sqrt{\frac{L_0 + \lambda - 125}{L}}$$

f_{nl} : Coefficient considering non-linear effects, to be taken as:

- For extreme sea loads design load scenario:

  f_{nl} = 0.7 at f_{xL} = 0

  f_{nl} = 0.9 at f_{xL} = 0.3

  f_{nl} = 0.9 at f_{xL} = 0.7

  f_{nl} = 0.6 at f_{xL} = 1

- For ballast water exchange design load scenario:

  f_{nl} = 0.85 at f_{xL} = 0

  f_{nl} = 0.95 at f_{xL} = 0.3

  f_{nl} = 0.95 at f_{xL} = 0.7

  f_{nl} = 0.80 at f_{xL} = 1

Intermediate values are obtained by linear interpolation.

f_{yz} : Girth distribution coefficient, to be taken as:

$$f_{yz} = \frac{z}{T_{LC}} + f_{yB} + 1$$

f_h : Coefficient to be taken as:

$$f_h = 3.0(1.21 - 0.66\ f_T)$$

k_a : Amplitude coefficient in the longitudinal direction of the ship, to be taken as:

$$k_a = (0.5 + f_T)\left\{(3 - 2\sqrt{f_{yB}}) - \frac{20}{9} f_{xL}(7 - 6\sqrt{f_{yB}})\right\} + \frac{2}{3}(1 - f_T) \qquad \text{for } f_{xL} < 0.15$$

$$k_a = 1.0 \qquad \text{for } 0.15 \le f_{xL} < 0.7$$

$$k_a = 1 + (f_{xL} - 0.7)\left\{\left(\frac{40}{3} f_T - 5\right) + 2(1 - f_{yB})\left[\frac{18}{C_B} f_T (f_{xL} - 0.7) - 0.25(2 - f_T)\right]\right\} \qquad \text{for } f_{xL} \ge 0.7$$

λ : Wave length of the dynamic load case, in m, to be taken as:

$$\lambda = 0.6(1 + f_T)L$$

k_p : Phase coefficient to be obtained from Table 3. Intermediate values are to be interpolated.

Table 3 : k_p values for HSM load cases

f_{xL}	0	0.3 – 0.1 f_T	0.35 – 0.1 f_T	0.8 – 0.2 f_T	0.9 – 0.2 f_T	1.0
k_p	–0.25 f_T (1 + f_{yB})	-1	1	1	-1	-1

Figure 2 : Transverse distribution amidships of dynamic pressure for HSM-1, HSA-1 and FSM-1 load cases

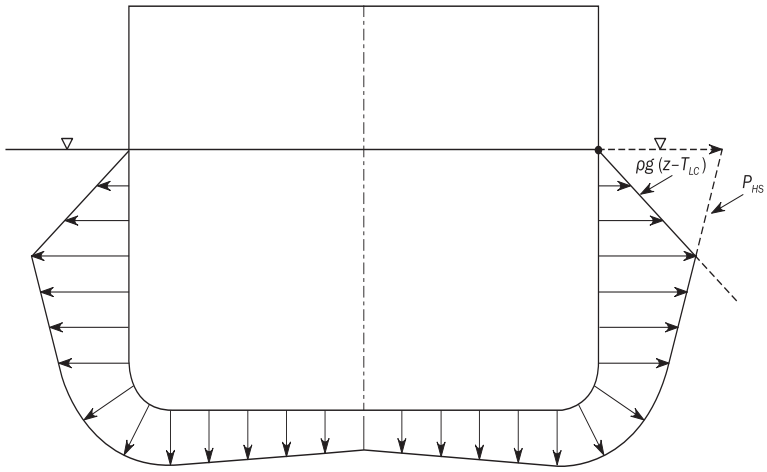

Figure 3 : Transverse distribution amidships of dynamic pressure for HSM-2, HSA-2 and FSM-2 load cases

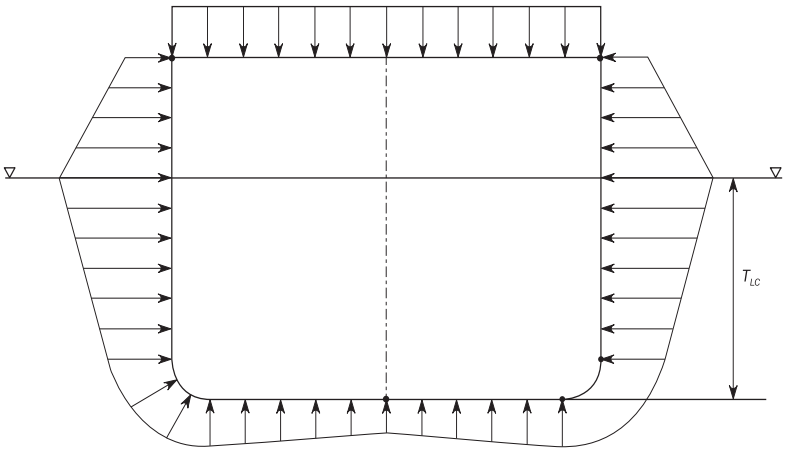

1.3.3 Hydrodynamic pressures for HSA load cases

The hydrodynamic pressures, P_W, for HSA-1 and HSA-2 load cases at any load point, in kN/m^2, are to be obtained from Table 4. See also Figure 2 and Figure 3.

Table 4 : Hydrodynamic pressures for HSA load cases

	Wave pressure, in kN/m^2		
Load case	$z \le T_{LC}$	$T_{LC} < z \le h_W + T_{LC}$	$z > h_W + T_{LC}$
HSA-1	$P_W = max(-P_{HS}, \rho g(z - T_{LC}))$	$P_W = P_{W,WL} - \rho g(z - T_{LC})$	$P_W = 0.0$
HSA-2	$P_W = max(P_{HS}, \rho g(z - T_{LC}))$		

where:

$$P_{HS} = f_{ps}\, f_{nl}\, f_h\, k_a\, k_p\, f_{yz}\, C_w \sqrt{\frac{L_0 + \lambda - 125}{L}}$$

f_{nl} : Coefficient considering non-linear effects, to be taken as defined in [1.3.2].

f_{yz} : Girth distribution coefficient, to be taken as:

$$f_{yz} = \frac{z}{T_{LC}} + f_{yB} + 1$$

f_h : Coefficient to be taken as:

$$f_h = 2.4(1.21 - 0.66\, f_T)$$

k_a : Amplitude coefficient in the longitudinal direction of the ship, to be taken as defined in [1.3.2].

λ : Wave length of the dynamic load case, in m, to be taken as:

$$\lambda = 0.6(1 + f_T)L$$

k_p : Phase coefficient to be obtained from Table 5. Intermediate values are to be interpolated.

Table 5 : k_p values for HSA load cases

f_{xL}	0	$0.3 - 0.1\, f_T$	$0.5 - 0.2\, f_T$	$0.8 - 0.2\, f_T$	$0.9 - 0.2\, f_T$	1.0
k_p	$1.5 - f_T - 0.5\, f_{yB}$	-1	1	1	-1	-1

1.3.4 Hydrodynamic pressures for FSM load cases

The hydrodynamic pressures, P_W, for FSM-1 and FSM-2 load cases, at any load point, in kN/m^2, are to be obtained from Table 6. See also Figure 2 and Figure 3.

Table 6 : Hydrodynamic pressures for FSM load cases

	Wave pressure, in kN/m^2		
Load case	$z \le T_{LC}$	$T_{LC} < z \le h_W + T_{LC}$	$z > h_W + T_{LC}$
FSM-1	$P_W = max(-P_{FS}, \rho g(z - T_{LC}))$	$P_W = P_{W,WL} - \rho g(z - T_{LC})$	$P_W = 0.0$
FSM-2	$P_W = max(P_{FS}, \rho g(z - T_{LC}))$		

where:

$$P_{FS} = f_\beta\, f_{ps}\, f_{nl}\, f_h\, k_a\, k_p\, f_{yz}\, C_w \sqrt{\frac{L_0 + \lambda - 125}{L}}$$

f_{nl} : Coefficient considering non-linear effects, to be taken as:

f_{nl} = 0.9 for extreme sea loads design load scenario.

f_{nl} = 0.95 for ballast water exchange design load scenarios.

f_{yz} : Girth distribution coefficient, to be taken as:

$$f_{yz} = \frac{z}{T_{LC}} + f_{yB} + 1$$

f_h : Coefficient to be taken as:

f_h = 2.6

k_a : Amplitude coefficient in the longitudinal direction of the ship, to be taken as:

$$k_a = 1 + (3.75 - 2\,f_T)(1 - 5\,f_{xL})(1 - f_{yB}) \quad \text{for} \quad f_{xL} < 0.2$$
$$k_a = 1.0 \quad \text{for} \quad 0.2 \le f_{xL} < 0.9$$
$$k_a = 1 + 20(1 - f_{yB})\,(f_{xL} - 0.9) \quad \text{for} \quad f_{xL} \ge 0.9$$

λ : Wave length of the dynamic load case, in m, to be taken as:

$$\lambda = 0.6(1 + 2/3\,f_T)\,L$$

k_p : Phase coefficient to be obtained from Table 7. Intermediate values are to be interpolated.

Table 7 : k_p values for FSM load cases

f_{xL}	0	$0.35 - 0.1\,f_T$	$0.5 - 0.2\,f_T$	0.75	0.8	1.0
k_p	$-0.75 - 0.25\,f_{yB}$	-1	1	1	-1	$-0.75 - 0.25\,f_{yB}$

1.3.5 Hydrodynamic pressures for BSR load cases

The wave pressures, P_W, for BSR-1 and BSR-2 load cases, at any load point, in kN/m^2, are to be obtained from Table 8. See also Figure 4 and Figure 5.

Table 8 : Hydrodynamic pressures for BSR load cases

	Wave pressure, in kN/m^2		
Load case	$z \le T_{LC}$	$T_{LC} < z \le h_W + T_{LC}$	$z > h_W + T_{LC}$
BSR-1P	$P_W = \max(P_{BSR}, \rho g\,(z - T_{LC}))$	$P_W = P_{W,WL} - \rho g\,(z - T_{LC})$	$P_W = 0.0$
BSR-2P	$P_W = \max(-P_{BSR}, \rho g\,(z - T_{LC}))$		
BSR-1S	$P_W = \max(P_{BSR}, \rho g\,(z - T_{LC}))$		
BSR-2S	$P_W = \max(-P_{BSR}, \rho g\,(z - T_{LC}))$		

where:

- For BSR-1P and BSR-2P load cases.

$$P_{BSR} = f_\beta\, f_{nl}\left(10y\sin\theta + 0.88\, f_{ps}\, C_w \sqrt{\frac{L_0 + \lambda - 125}{L}}\,(f_{yB1} + 1)\right)$$

- For BSR-1S and BSR-2S load cases.

$$P_{BSR} = f_\beta\, f_{nl}\left(-10y\sin\theta + 0.88\, f_{ps}\, C_w \sqrt{\frac{L_0 + \lambda - 125}{L}}\,(f_{yB1} + 1)\right)$$

f_{nl} : Coefficient considering non-linear effect, to be taken as:

f_{nl} = 1 for extreme sea loads design load scenario.

f_{nl} = 1 for ballast water exchange design load scenarios.

λ : Wave length of the dynamic load case, in m, to be taken as:

$$\lambda = \frac{g}{2\pi}\,T_\theta^2$$

Figure 4 : Transverse distribution of dynamic pressure for BSR-1P (left) and BSR-1S (right) load cases

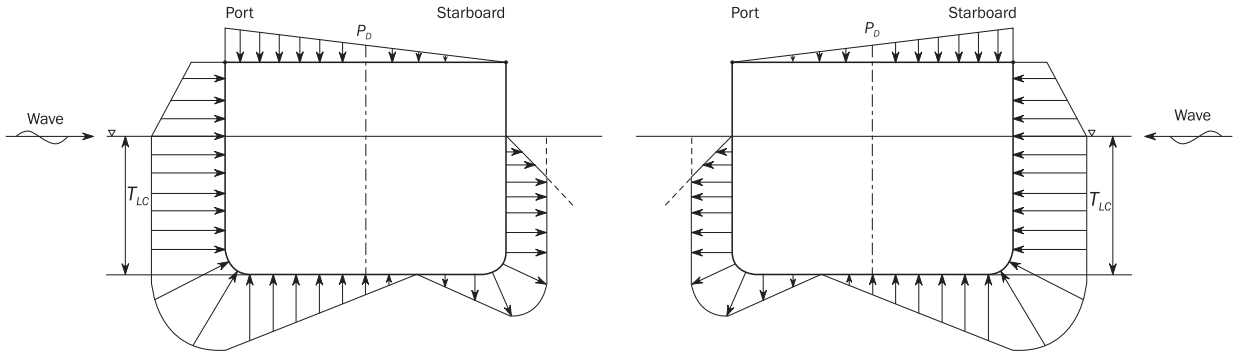

Figure 5 : Transverse distribution of dynamic pressure for BSR-2P (left) and BSR-2S (right) load cases

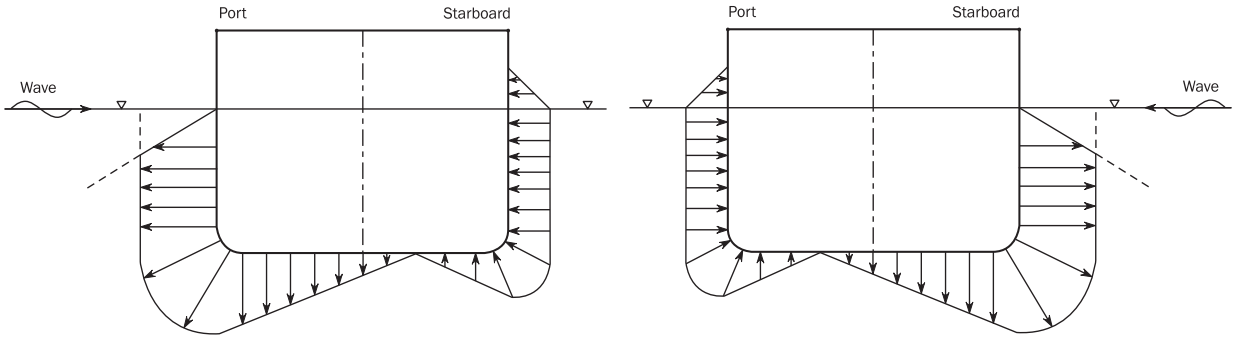

1.3.6 Hydrodynamic pressures for BSP load cases

The wave pressures, P_W, for BSP-1 and BSP-2 load cases, at any load point, in kN/m^2, are to be obtained from Table 9. See also Figure 6 and Figure 7.

Figure 6 : Transverse distribution of dynamic pressure for BSP-1P (left) and BSP-1S (right) load cases

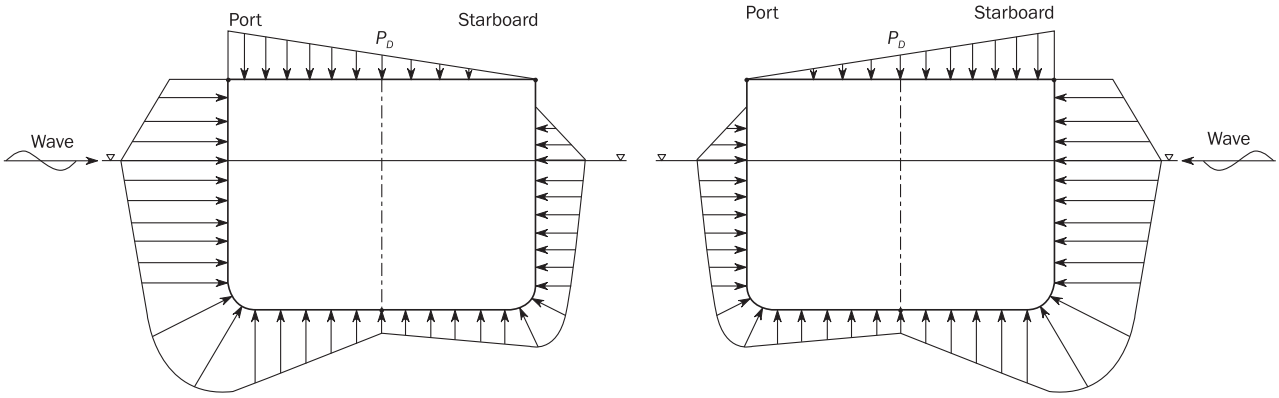

Figure 7 : Transverse distribution of dynamic pressure for BSP-2P (left) and BSP-2S (right) load cases

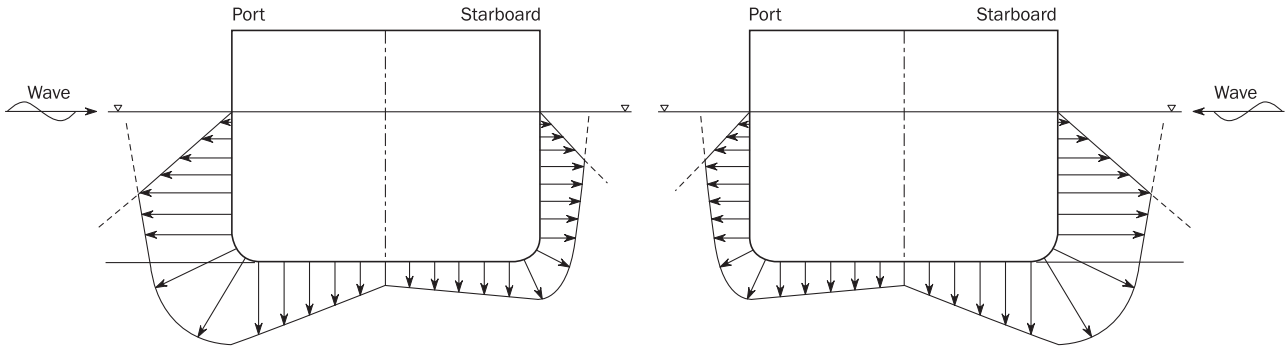

Table 9 : Hydrodynamic pressures for BSP load cases

	Wave pressure, in kN/m^2		
Load case	$z \le T_{LC}$	$T_{LC} < z \le h_W + T_{LC}$	$z > h_W + T_{LC}$
BSP-1P	$P_W = \max(P_{BSP}, \rho g (z - T_{LC}))$	$P_W = P_{W,WL} - \rho g (z - T_{LC})$	$P_W = 0.0$
BSP-2P	$P_W = \max(- P_{BSP}, \rho g (z - T_{LC}))$		
BSP-1S	$P_W = \max(P_{BSP}, \rho g (z - T_{LC}))$		
BSP-2S	$P_W = \max(- P_{BSP}, \rho g (z - T_{LC}))$		

where:

$$P_{BSP} = 4.5\, f_\beta\, f_{ps}\, f_{nl}\, f_{yz}\, C_w \sqrt{\frac{L_0 + \lambda - 125}{L}}$$

λ : Wave length of the dynamic load case, in m, to be taken as:

$$\lambda = 0.2(1 + 2\, f_T)L$$

f_{yz} : Girth distribution coefficient, to be obtained from Table 10.

Table 10 : Girth distribution coefficient, f_{yz} for BSP load cases

Transverse position	BSP-1P - BSP-2P	BSP-1S - BSP-2S
$y \ge 0$	$f_{yz} = 2\,\frac{z}{T_{LC}} + 2.5\, f_{yB1} + 0.5$	$f_{yz} = \frac{2}{3}\,\frac{z}{T_{LC}} + \frac{1}{2}\, f_{yB1} + 0.5$
$y < 0$	$f_{yz} = \frac{2}{3}\,\frac{z}{T_{LC}} + \frac{1}{2}\, f_{yB1} + 0.5$	$f_{yz} = 2\,\frac{z}{T_{LC}} + 2.5\, f_{yB1} + 0.5$

f_{nl} : Coefficient considering non-linear effect, to be taken as:

- For extreme sea loads design load scenario:

  f_{nl} = 0.6 at f_{xL} = 0

  f_{nl} = 0.8 at f_{xL} = 0.3

  f_{nl} = 0.8 at f_{xL} = 0.7

  f_{nl} = 0.6 at f_{xL} = 1

- For ballast water exchange design load scenario:

  f_{nl} = 0.6 at f_{xL} = 0

  f_{nl} = 0.8 at f_{xL} = 0.3

  f_{nl} = 0.8 at f_{xL} = 0.7

  f_{nl} = 0.6 at f_{xL} = 1

Intermediate values are obtained by linear interpolation.

1.3.7 Hydrodynamic pressures for OST load cases

The wave pressures, P_W, for OST-1 and OST-2 load cases, at any load point are to be obtained, in kN/m^2, from Table 11. See also Figure 8 and Figure 9.

Figure 8 : Transverse distribution of dynamic pressure amidships for OST-1P (left) and OST-1S (right) load cases

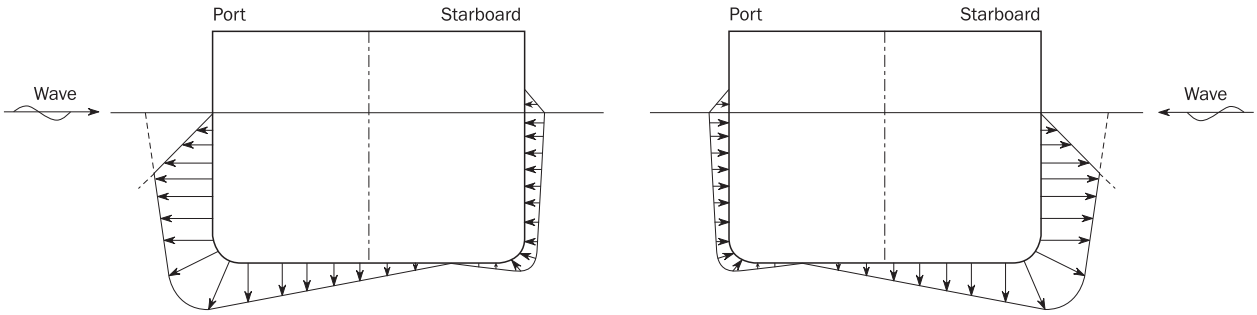

Figure 9 : Transverse distribution of dynamic pressure amidships for OST-2P (left) and OST-2S (right) load cases

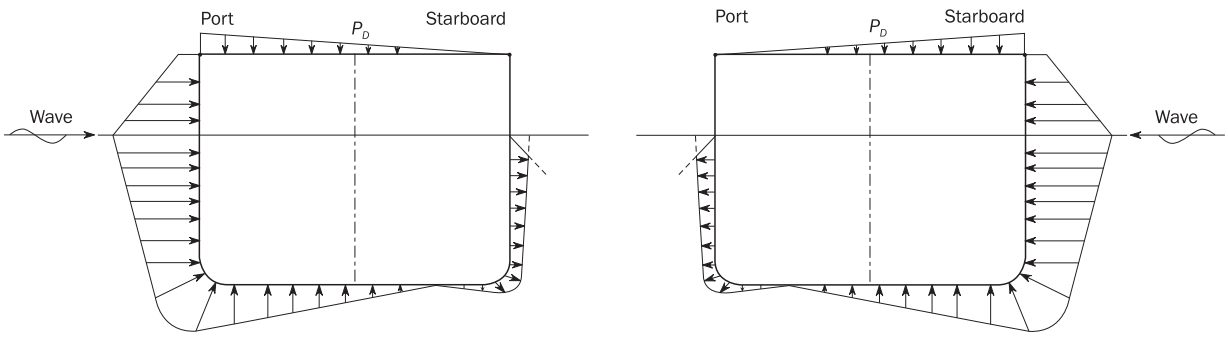

Table 11 : Hydrodynamic pressures for OST load cases

	Wave pressure, in kN/m²		
Load case	$z \le T_{LC}$	$T_{LC} < z \le h_W + T_{LC}$	$z > h_W + T_{LC}$
OST-1P	$P_W = \max(P_{OST}, \rho g (z - T_{LC}))$	$P_W = P_{W,WL} - \rho g(z - T_{LC})$	$P_W = 0.0$
OST-2P	$P_W = \max(- P_{OST}, \rho g (z - T_{LC}))$		
OST-1S	$P_W = \max(P_{OST}, \rho g (z - T_{LC}))$		
OST-2S	$P_W = \max(- P_{OST}, \rho g (z - T_{LC}))$		

where:

$$P_{OST} = 1.38\, f_{ps}\, f_{nl}\, k_a\, k_p\, f_{yz}\, C_w \sqrt{\frac{L_O + \lambda - 125}{L}}$$

f_{yz} : Girth distribution coefficient, to be obtained from Table 12.

f_{nl} : Coefficient considering non-linear effect, to be taken as:

f_{nl} = 0.8 for extreme sea loads design load scenario.

f_{nl} = 0.9 for ballast water exchange design load scenarios.

λ : Wave length of the dynamic load case, in m, to be taken as:

$\lambda = 0.45\, L$

k_a : Amplitude coefficient in the longitudinal direction of the ship, to be obtained from Table 13.

k_p : Phase coefficient to be obtained from Table 14. Intermediate values are to be interpolated.

Table 12 : Girth distribution coefficient, f_{yz} for OST load cases

Transverse position	OST-1P - OST-2P	OST-1S - OST-2S
$y \geq 0$	$5\,\frac{z}{T_{LC}} + 3.5\,f_{yB} + 1.5$	$1.5\,\frac{z}{T_{LC}} + 1.5$
$y < 0$	$1.5\,\frac{z}{T_{LC}} + 1.5$	$5\,\frac{z}{T_{LC}} + 3.5\,f_{yB} + 1.5$

Table 13 : k_a values for OST load cases

Transverse position	Longitudinal Position	OST-1P - OST-2P	OST-1S - OST-2S
$y \geq 0$	$f_{xL} \leq 0.2$	$1.0 + 3.5(1 - f_{yB})(1 - 5\,f_{xL})$	$1.0 + [3.5 - (4f_T - 0.5)f_{yB](1 - 5\,f_{xL})$
	$0.2 < f_{xL} \leq 0.8$	1.0	1.0
	$f_{xL} > 0.8$	1.0	$1.0 + 4\,(1 - f_T)\,(5\,f_{xL} - 4)\,f_{yB}$
$y < 0$	$f_{xL} \leq 0.2$	$1.0 + [3.5 - (4\,f_T - 0.5)\,f_{yB}]\,(1 - 5\,f_{xL})$	$1.0 + 3.5(1 - f_{yB})(1 - 5\,f_{xL})$
	$0.2 < f_{xL} \leq 0.8$	1.0	1.0
	$f_{xL} > 0.8$	$1.0 + 4(1 - f_T)(5\,f_{xL} - 4)\,f_{yB}$	1.0

Table 14 : k_p values for OST load cases

Transverse position	f_{xL}	OST-1P - OST-2P	OST-1S - OST-2S
$y \geq 0$	0.0	1.0	1.0
	0.2	1.0	$1.0 + (0.75 - 1.5\,f_T)\,f_{yB}$
	0.4	-1.0	$-1.0 + (1.75 - 0.5\,f_T)\,f_{yB}$
	0.5	-1.0	$-1.0 + (1.75 - 0.5\,f_T)\,f_{yB}$
	0.7	$-0.1 + (1.6\,f_T - 1.5)\,f_{yB}$	$-0.1 + (0.25 - 0.3\,f_T)\,f_{yB}$
	0.9	$0.8 + 0.2\,f_{yB}$	$0.8 - (0.9\,f_T + 0.85)\,f_{yB}$
	1.0	$-1.0 + f_{yB}$	$-1.0 + (0.5 - 0.5\,f_T)\,f_{yB}$
$y < 0$	0.0	1.0	1.0
	0.2	$1.0 + (0.75 - 1.5\,f_T)\,f_{yB}$	1.0
	0.4	$-1.0 + (1.75 - 0.5\,f_T)\,f_{yB}$	-1.0
	0.5	$-1.0 + (1.75 - 0.5\,f_T)\,f_{yB}$	-1.0
	0.7	$-0.1 + (0.25 - 0.3\,f_T)\,f_{yB}$	$-0.1 + (1.6f_T - 1.5)f_{yB}$
	0.9	$0.8 - (0.9\,f_T + 0.85)\,f_{yB}$	$0.8 + 0.2\,f_{yB}$
	1.0	$-1.0 + (0.5 - 0.5\,f_T)\,f_{yB}$	$-1.0 + f_{yB}$

1.3.8 Hydrodynamic pressures for OSA load cases

The wave pressures, P_W, for OSA-1 and OSA-2 load cases, at any load point, in kN/m^2, are to be obtained from Table 15. See also Figure 10 and Figure 11.

Table 15 : Hydrodynamic pressures for OSA load cases

	Wave pressure, in kN/m²		
Load case	$z \le T_{LC}$	$T_{LC} < z \le h_W + T_{LC}$	$z > h_W + T_{LC}$
OSA-1P	$P_W = \max(P_{OSA}, \rho g (z - T_{LC}))$	$P_W = P_{W,WL} - \rho g (z - T_{LC})$	$P_W = 0.0$
OSA-2P	$P_W = \max(- P_{OSA}, \rho g (z - T_{LC}))$		
OSA-1S	$P_W = \max(P_{OSA}, \rho g (z - T_{LC}))$		
OSA-2S	$P_W = \max(- P_{OSA}, \rho g (z - T_{LC}))$		

where:

$$P_{OSA} = 0.81\, f_{ps}\, f_{nl}\, k_a\, k_p\, f_{yz}\, C_w \sqrt{\frac{L_0 + \lambda - 125}{L}}\,(1 + 0.5\, f_T)$$

λ : Wave length of the dynamic load case, in m, to be taken as:

$\lambda = 0.70\, L$

f_{nl} : Coefficient considering non-linear effect, to be taken as:

- For extreme sea loads design load scenario:

  $f_{nl} = 0.5$ at $f_{xL} = 0$

  $f_{nl} = 0.8$ at $f_{xL} = 0.3$

  $f_{nl} = 0.8$ at $f_{xL} = 0.7$

  $f_{nl} = 0.6$ at $f_{xL} = 1$

- For ballast water exchange design load scenario:

  $f_{nl} = 0.75$ at $f_{xL} = 0$

  $f_{nl} = 0.9$ at $f_{xL} = 0.3$

  $f_{nl} = 0.9$ at $f_{xL} = 0.7$

  $f_{nl} = 0.8$ at $f_{xL} = 1$

Intermediate values are obtained by linear interpolation.

f_{yz} : Girth distribution coefficient, to be obtained from Table 16.

k_a : Amplitude coefficient in the longitudinal direction of the ship, to be obtained from Table 17.

k_p : Phase coefficient to be obtained from Table 18. Intermediate values are to be interpolated.

Table 16 : Girth distribution coefficient, f_{yz} for OSA load cases

Transverse position	OSA-1P - OSA-2P	OSA-1S - OSA-2S
$y \ge 0$	$5.5\,\frac{z}{T_{LC}} + 5.3\, f_{yB} + 2.2$	$0.9\,\frac{z}{T_{LC}} + 0.4\, f_{yB} + 2.2$
$y < 0$	$0.9\,\frac{z}{T_{LC}} + 0.4\, f_{yB} + 2.2$	$5.5\,\frac{z}{T_{LC}} + 5.3\, f_{yB} + 2.2$

Table 17 : k_a values for OSA load cases

Transverse position	Longitudinal position	OSA-1P - OSA-2P	OSA-1S - OSA-2S
$y \geq 0$	$f_{xL} \leq 0.2$	$1.0 + 3\ (2 - f_T)\ (1 - 5\ f_{xL})\ (1 - f_{yB})$	$1.0 + 3\ (2 - f_T)\ (1 - 5\ f_{xL}) + \{(28\ f_{xL} - 5) + 3\ f_T(1 - 5\ f_{xL})\}\ f_{yB}$
	$0.2 < f_{xL} \leq 0.5$	1.0	$1.0 + (1 - 2\ f_{xL})\ f_{yB}$
	$0.5 < f_{xL} \leq 0.8$	1.0	$1.0 + 1.5(2\ f_{xL} - 1)\ f_{yB}$
	$f_{xL} > 0.8$	$1.0 + (f_{xL} - 0.8)\ (1 - f_{yB})\ A$	$1.0 + \{1.5(2\ f_{xL} - 1) - (f_{xL} - 0.8)\ A\} f_{yB} + (f_{xL} - 0.8)\ A$
$y < 0$	$f_{xL} \leq 0.2$	$1.0 + 3\ (2 - f_T)\ (1 - 5\ f_{xL}) + \{(28\ f_{xL} - 5) + 3\ f_T(1 - 5\ f_{xL})\}\ f_{yB}$	$1.0 + 3\ (2 - f_T)\ (1 - 5\ f_{xL})\ (1 - f_{yB})$
	$0.2 < f_{xL} \leq 0.5$	$1.0 + (1 - 2\ f_{xL})\ f_{yB}$	1.0
	$0.5 < f_{xL} \leq 0.8$	$1.0 + 1.5(2\ f_{xL} - 1)\ f_{yB}$	1.0
	$f_{xL} > 0.8$	$1.0 + \{1.5(2\ f_{xL} - 1) - (f_{xL} - 0.8)\ A\} f_{yB} + (f_{xL} - 0.8)\ A$	$1.0 + (f_{xL} - 0.8)\ (1 - f_{yB})\ A$
where: $A = 22 - 15 f_T + 3[22(f_{xL} - 0.8) - 0.25(2 - f_T)]$			

Figure 10 : Transverse distribution of dynamic pressure amidships for OSA-1P (left) and OSA-1S (right) load cases

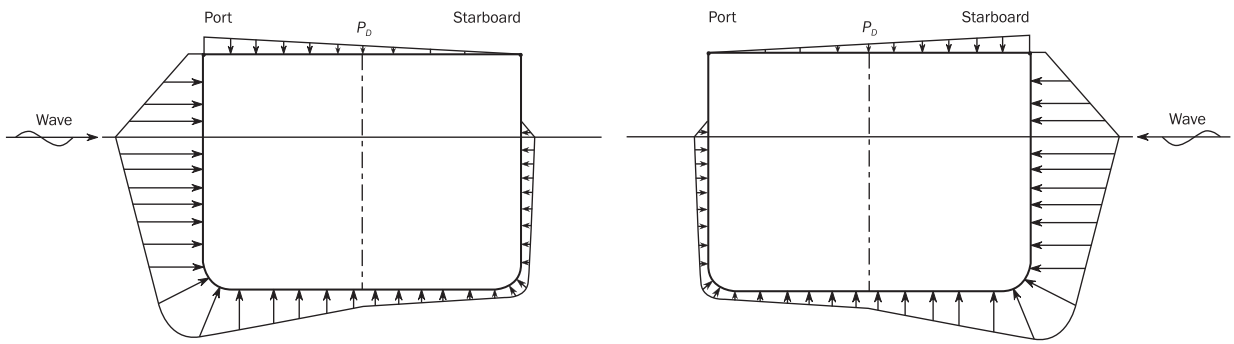

Figure 11 : Transverse distribution of dynamic pressure amidships for OSA-2P (left) and OSA-2S (right) load cases

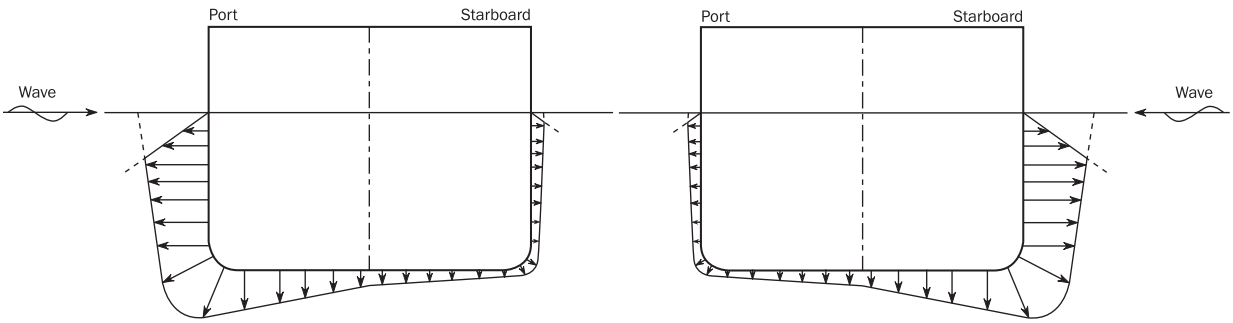

Table 18 : k_p values for OSA load cases

Transverse position	f_{xL}	OSA-1P; OSA-2P	OSA-1S; OSA-2S
$y \geq 0$	0.0	$0.75 - 0.5\ f_{yB}$	0.75
	0.2	$f_T - 0.25 + (1.25 - f_T)\ f_{yB}$	$f_T - 0.25 + (0.35\ f_T - 0.47)\ f_{yB}$
	0.4	1.0	$1.0 + (2.7\ f_T - 3.2)\ f_{yB}$
	0.5	$1.25 - 0.5\ f_T + (0.5\ f_T - 0.25) f_{yB}$	$1.25 - 0.5\ f_T + (2.7\ f_T - 3.2)\ f_{yB}$
	0.6	$1.5 - f_T + (f_T - 1.07)\ f_{yB}$	$1.5 - f_T + (2.68\ f_T - 3.19)\ f_{yB}$
	0.85	$0.5\ f_T - 1.25 + (0.25 - 0.5\ f_T)\ f_{yB}$	$0.5\ f_T - 1.25 + (0.2 - 0.1\ f_T)\ f_{yB}$
	1.0	$0.5\ f_T - 1.25 + (0.25 - 0.5\ f_T)\ f_{yB}$	$0.5\ f_T - 1.25 + (0.2 - 0.1\ f_T)\ f_{yB}$
$y < 0$	0.0	0.75	$0.75 - 0.5\ f_{yB}$
	0.2	$f_T - 0.25 + (0.35\ f_T - 0.47)\ f_{yB}$	$f_T - 0.25 + (1.25 - f_T)\ f_{yB}$
	0.4	$1.0 + (2.7\ f_T - 3.2)\ f_{yB}$	1.0
	0.5	$1.25 - 0.5\ f_T + (2.7\ f_T - 3.2)\ f_{yB}$	$1.25 - 0.5\ f_T + (0.5\ f_T - 0.25) f_{yB}$
	0.6	$1.5 - f_T + (2.68\ f_T - 3.19)\ f_{yB}$	$1.5 - f_T + (f_T - 1.07)\ f_{yB}$
	0.85	$0.5\ f_T - 1.25 + (0.2 - 0.1\ f_T)\ f_{yB}$	$0.5\ f_T - 1.25 + (0.25 - 0.5\ f_T)\ f_{yB}$
	1.0	$0.5\ f_T - 1.25 + (0.2 - 0.1\ f_T)\ f_{yB}$	$0.5\ f_T - 1.25 + (0.25 - 0.5\ f_T)\ f_{yB}$

1.3.9 Envelope of dynamic pressure

The envelope of dynamic pressure at any point, $P_{ex\text{-}max}$, is to be taken as the greatest pressure obtained from any of the load cases determined by [1.3.2] to [1.3.8].

1.4 External dynamic pressures for fatigue assessments

1.4.1 General

The external pressure P_{ex} at any load point of the hull for the fatigue static plus dynamic (F:S+D) design load scenario, is to be derived for each fatigue dynamic load case and is to be taken as:

$P_{ex} = P_S + P_W$ but not less than 0.

where:

P_S : Hydrostatic pressure, in kN/m^2, defined in[1.2].

P_W : Hydrodynamic pressure, in kN/m^2, is defined in [1.4.2] to [1.4.6].

1.4.2 Hydrodynamic pressures for HSM load cases

The hydrodynamic pressures, P_W, for load cases HSM-1 and HSM-2, at any load point, in kN/m^2, are to be obtained from Table 19.

Table 19 : Hydrodynamic pressures for HSM load cases

	Wave pressure, in kN/m^2		
Load case	$z \leq T_{LC}$	$T_{LC} < z \leq 2h_w + T_{LC}$	$z > 2h_w + T_{LC}$
HSM-1	$P_w = max\ (-P_{HS}, \rho g(z - T_{LC}))$	$P_w = P_{w,wL} - \frac{1}{2}\rho g\ (z - T_{LC})$	$P_W = 0.0$
HSM-2	$P_w = max\ (P_{HS}, \rho g(z - T_{LC}))$		

where:

$$P_{HS} = f_p\, f_h\, k_a\, k_p\, f_{yz}\, C_w \sqrt{\frac{L_0 + \lambda - 125}{L}}$$

f_{yz} : Girth distribution coefficient, to be taken as:

$$f_{yz} = \frac{z}{T_{LC}} + f_{yB} + 1$$

f_h : Coefficient to be taken as:

$$f_h = 2.75\,(1.21 - 0.66\, f_T)$$

f_p : Coefficient to be taken as:

$$f_p = f_{fa}[(0.21 + 0.02\, f_T) + (6 - 4\, f_T)\, L \times 10^{-5}]$$

k_a : Amplitude coefficient in the longitudinal direction of the ship, to be taken as:

$$k_a = 1 + 3\, f_T - (1 + f_T)\, f_{yB} + [5\,(1 + f_T)\, f_{yB} - 15\, f_T]\, f_{xL} \quad \text{for } f_{xL} < 0.2$$

$$k_a = 1.0 \quad \text{for } 0.2 \le f_{xL} < 0.6$$

$$k_a = 1 + (f_{xL} - 0.6)\,[(13.5 - 3.5\, f_T)\, f_{yB} + (14.5\, f_T - 17) + 40(1 - f_{yB})\,(f_{xL} - 0.6)] \quad \text{for } f_{xL} \ge 0.6$$

λ : Wave length of the dynamic load case, in m, to be taken as:

$$\lambda = 0.6\,(1 + f_T)\, L$$

k_p : Phase coefficient to be obtained from Table 20. Intermediate values are to be interpolated.

Table 20 : k_p values for HSM load cases

f_{xL}	k_P
0	$(1.0 - f_T) + (0.5 - f_T)\, f_{yB}$
$0.3 - 0.1\, f_T$	-1
$0.5 - 0.2\, f_T$	1
$0.9 - 0.4\, f_T$	1
$0.9 - 0.2\, f_T$	-1
1.0	-1

1.4.3 Hydrodynamic pressures for FSM load cases

The hydrodynamic pressures, P_W, for FSM-1 and FSM-2 load cases, at any load point, in kN/m^2, are to be obtained from Table 21.

Table 21 : Hydrodynamic pressures for FSM load cases

	Wave pressure, in kN/m^2		
Load case	$z \le T_{LC}$	$T_{LC} < z \le 2\, h_W + T_{LC}$	$z > 2\, h_W + T_{LC}$
FSM-1	$P_w = max(-P_{FS}, \rho g(z - T_{LC}))$	$P_W = P_{W,WL} - \frac{1}{2}\rho g\,(z - T_{LC})$	$P_W = 0.0$
FSM-2	$P_W = max(P_{FS}, \rho g(z - T_{LC}))$		

where:

$$P_{FS} = f_p\, f_h\, k_a\, k_p\, f_{yz}\, C_w \sqrt{\frac{L_0 + \lambda - 125}{L}}$$

f_{yz} : Girth distribution coefficient, to be taken as:

$$f_{yz} = \frac{z}{T_{LC}} + f_{yB} + 1$$

f_h : Coefficient to be taken as:
$f_h = 2.6$

f_p : Coefficient to be taken as:

$$f_p = f_{fa}[(0.21 + 0.02\, f_T) + (6 - 4\, f_T)\; L \times 10^{-5}]$$

k_a : Amplitude coefficient in the longitudinal direction of the ship, to be taken as:

$$k_a = 1 + (3.5 - 2\, f_T)(1 - 5\, f_{xL})(1 - f_{yB}) \quad \text{for} \quad f_{xL} < 0.2$$
$$k_a = 1.0 \quad \text{for} \quad 0.2 \le f_{xL} < 0.9$$
$$k_a = 1 + 15(1 - f_{yB})(f_{xL} - 0.9) \quad \text{for} \quad f_{xL} \ge 0.9$$

λ : Wave length of the dynamic load case, in m, to be taken as:

$$\lambda = 0.6\left(1 + \frac{2}{3}\, f_T\right) L$$

k_p : Phase coefficient to be obtained from Table 22. Intermediate values are to be interpolated.

Table 22 : k_p values for FSM load cases

f_{xL}	k_P
0	$-0.75 - 0.25\, f_{yB}$
$0.35 - 0.1\, f_T$	-1
$0.5 - 0.2\, f_T$	1
0.75	1
$0.9 - 0.1\, f_T$	-1
1.0	$-0.5 - 0.5\, f_{yB}$

1.4.4 Hydrodynamic pressures for BSR load cases

The hydrodynamic pressures, P_W, for BSR-1 and BSR-2 load cases, at any load point, in kN/m^2, are to be obtained from Table 23.

Table 23 : Hydrodynamic pressures for BSR load cases

	Wave pressure, in kN/m^2		
Load case	$z \le T_{LC}$	$T_{LC} < z \le 2\, h_W + T_{LC}$	$z > 2\, h_W + T_{LC}$
BSR-1P	$P_W = \max(P_{BSR}, \rho g(z - T_{LC}))$	$P_W = P_{W,WL} - \frac{1}{2}\rho g\,(z - T_{LC})$	$P_W = 0.0$
BSR-2P	$P_W = \max(-P_{BSR}, \rho g(z - T_{LC}))$		
BSR-1S	$P_W = \max(P_{BSR}, \rho g(z - T_{LC}))$		
BSR-2S	$P_W = \max(-P_{BSR}, \rho g(z - T_{LC}))$		

where:

- For BSR-1P and BSR-2P load cases.

$$P_{BSR} = 10y \sin\theta + 0.88 f_p\, C_w \sqrt{\frac{L_0 + \lambda - 125}{L}}(f_{yB1} + 1)$$

- For BSR-1S and BSR-2S load cases.

$$P_{BSR} = -10y \sin\theta + 0.88 f_p\, C_w \sqrt{\frac{L_0 + \lambda - 125}{L}}(f_{yB1} + 1)$$

f_p : Coefficient to be taken as:

$$f_p = f_{fa}[(0.21 + 0.04\, f_T) - (12\, f_T - 2)\, B \times 10^{-4}]$$

λ : Wave length of the dynamic load case, in m, to be taken as:

$$\lambda = \frac{g}{2\pi} T_\theta^2$$

1.4.5 Hydrodynamic pressures for BSP load cases

The wave pressures, P_W, for BSP-1 and BSP-2 load cases, at any load point, in kN/m², are to be obtained from Table 24.

Table 24 : Hydrodynamic pressures for BSP load cases

	Wave pressure, in kN/m²		
Load case	$z \le T_{LC}$	$T_{LC} < z \le 2\, h_w + T_{LC}$	$z > 2\, h_w + T_{LC}$
BSP-1P	P_W = max (P_{BSP}, $\rho g(z - T_{LC})$)	$P_W = P_{W,WL} - \frac{1}{2}\rho g(z - T_{LC})$	P_W = 0.0
BSP-2P	P_W = max (- P_{BSP}, $\rho g(z - T_{LC})$)		
BSP-1S	P_W = max (P_{BSP}, $\rho g(z - T_{LC})$)		
BSP-2S	P_W = max (- P_{BSP}, $\rho g(z - T_{LC})$)		

where:

$$P_{BSP} = 4.5\, f_p\, f_{yz}\, C_w \sqrt{\frac{L_0 + \lambda - 125}{L}}$$

λ : Wave length of the dynamic load case, in m, to be taken as:

$$\lambda = 0.2(1 + 2\, f_T)L$$

f_p : Coefficient to be taken as:

$$f_p = f_{fa}[0.2 + (8 + 16\, f_T) \times 10^{-3}]$$

f_{yz} : Girth distribution coefficient, to be obtained from Table 25.

Table 25 : Girth distribution coefficient, f_{yz} for BSP load cases

Transverse position	BSP-1P - BSP-2P	BSP-1S - BSP-2S
$y \ge 0$	$f_{yz} = 2\frac{z}{T_{LC}} + 2.5\, f_{yB1} + 0.5$	$f_{yz} = \frac{2}{3}\frac{z}{T_{LC}} + \frac{1}{2} f_{yB1} + 0.5$
$y < 0$	$f_{yz} = \frac{2}{3}\frac{z}{T_{LC}} + \frac{1}{2} f_{yB1} + 0.5$	$f_{yz} = 2\frac{z}{T_{LC}} + 2.5\, f_{yB1} + 0.5$

1.4.6 Hydrodynamic pressures for OST load cases

The wave pressures, P_W, for OST-1 and OST-2 load cases, at any load point, in kN/m², are to be obtained from Table 26.

Table 26 : Hydrodynamic pressures for OST load cases

	Wave pressure, in kN/m²		
Load case	$z \le T_{LC}$	$T_{LC} < z \le 2\ h_W + T_{LC}$	$z > 2h_W + T_{LC}$
OST-1P	$P_W = \max(P_{OST}, \rho g(z - T_{LC}))$	$P_W = P_{W,WL} - \frac{1}{2}\rho g(z - T_{LC})$	$P_W = 0.0$
OST-2P	$P_W = \max(-P_{OST}, \rho g(z - T_{LC}))$		
OST-1S	$P_W = \max(P_{OST}, \rho g(z - T_{LC}))$		
OST-2S	$P_W = \max(-P_{OST}, \rho g(z - T_{LC}))$		

where:

$$P_{OST} = 1.38\ f_p\ k_a\ k_p\ f_{yz}\ C_w \sqrt{\frac{L_0 + \lambda - 125}{L}}$$

f_{yz} : Girth distribution coefficient, to be obtained from Table 27.

Table 27 : Girth distribution coefficient, f_{yz} for OST load cases

Transverse position	OST-1P - OST-2P	OST-1S - OST-2S
$y \ge 0$	$5\ \frac{z}{T_{LC}} + 3.3\ f_{yB} + 1.7$	$\frac{z}{T_{LC}} + 0.3\ f_{yB} + 1.7$
$y < 0$	$\frac{z}{T_{LC}} + 0.3\ f_{yB} + 1.7$	$5\ \frac{z}{T_{LC}} + 3.3\ f_{yB} + 1.7$

f_p : Coefficient to be taken as:

$$f_p = f_{fa}[(0.25 - 0.02\ f_T) + (12\ f_T - 9)\ B \times 10^{-4}]$$

λ : Wave length of the dynamic load case, in m, to be taken as:

$$\lambda = 0.45\ L$$

k_a : Amplitude coefficient in the longitudinal direction of the ship, to be obtained from Table 28.

k_p : Phase coefficient to be obtained from Table 29. Intermediate values are to be interpolated.

Table 28 : k_a values for OST load cases

Transverse position	Longitudinal Position	OST-1P - OST-2P	OST-1S - OST-2S
$y \ge 0$	$f_{xL} \le 0.2$	$1.0 + \{(3.5 - 2\ f_T) + (10\ f_T - 17.5)f_{xL}\}(1 - f_{yB})$	$1.0 + (3.5 - 2\ f_T - 1.5\ f_{yB}) + (10\ f_T - 17.5 + 7.5\ f_{yB})f_{xL}$
	$0.2 < f_{xL} \le 0.8$	1.0	1.0
	$f_{xL} > 0.8$	1.0	$1.0 + 2(1 - f_T)(5f_{xL} - 4)f_{yB}$
$y < 0$	$f_{xL} \le 0.2$	$1.0 + (3.5 - 2\ f_T - 1.5\ f_{yB}) + (10\ f_T - 17.5 + 7.5\ f_{yB})f_{xL}$	$1.0 + \{(3.5 - 2\ f_T) + (10\ f_T - 17.5)f_{xL}\}(1 - f_{yB})$
	$0.2 < f_{xL} \le 0.8$	1.0	1.0
	$f_{xL} > 0.8$	$1.0 + 2(1 - f_T)(5f_{xL} - 4)f_{yB}$	1.0

Table 29 : k_p values for OST load cases

Transverse position	f_{xL}	OST-1P - OST-2P	OST-1S - OST-2S
$y \geq 0$	0.0	1.0	$1.0 + (0.5 - f_T)\ f_{yB}$
	0.2	1.0	$1.0 + 3(0.5 - f_T) f_{yB}$
	0.4	-1.0	$(2.7 - 2.4\ f_T)\ f_{yB} - 1$
	0.5	-1.0	$(2.8 - 2.6\ f_T)\ f_{yB} - 1$
	0.7	$(f_T - 0.62)\ f_{yB} - 0.38$	$(2.38 - 3\ f_T)\ f_{yB} - 0.38$
	0.9	$0.24 + 0.76\ f_{yB}$	$0.24 - (0.24 + f_T)\ f_{yB}$
	1.0	$-1.0 + 0.5\ f_{yB}$	-1.0
$y < 0$	0.0	$1.0 + (0.5 - f_T)\ f_{yB}$	1.0
	0.2	$1.0 + 3(0.5 - f_T) f_{yB}$	1.0
	0.4	$(2.7 - 2.4\ f_T)\ f_{yB} - 1$	-1.0
	0.5	$(2.8 - 2.6\ f_T)\ f_{yB} - 1$	-1.0
	0.7	$(2.38 - 3\ f_T)\ f_{yB} - 0.38$	$(f_T - 0.62)\ f_{yB} - 0.38$
	0.9	$0.24 - (0.24 + f_T)\ f_{yB}$	$0.24 + 0.76\ f_{yB}$
	1.0	-1.0	$-1.0 + 0.5\ f_{yB}$

2 EXTERNAL PRESSURES ON EXPOSED DECKS

2.1 Application

2.1.1

The external pressures and forces on exposed decks are only to be applied for strength assessment.

2.1.2

The green sea pressures defined in [2.2] for exposed decks are to be considered independently of the pressures due to distributed cargo or other equipment loads and any concentrated forces due to cargo or other unit equipment loads, defined in [2.3.1] and [2.3.2] respectively.

2.2 Green sea loads

2.2.1 Pressure on exposed deck

The external dynamic pressure due to green sea loading, P_D, at any point of an exposed deck, in kN/m^2, for the static plus dynamic (S+D) design load scenarios is to be derived for each dynamic load case and is to be taken as defined in [2.2.3] to [2.2.4]

The external dynamic pressure due to green sea loading, P_D, at any point of an exposed deck for the static (S) design load scenarios is zero.

2.2.2

If a breakwater is fitted on the exposed deck, no reduction in the green sea pressure is allowed for the area of the exposed deck located aft of the breakwater.

2.2.3 HSM, HSA and FSM load cases

The external pressure, P_D, for HSM, HSA and FSM load cases, at any load point of an exposed deck is to be obtained, in kN/m^2, from the following formula, see Figure 2 and Figure 3:

$$P_D = \chi P_W$$

where:

$P_W = P_{W,D}$, but not to be taken less than $P_{D\text{-}min}$.

$P_{W,D}$: Pressure, in kN/m^2, obtained at side of the exposed deck for HSM, HSA and FSM load cases as defined in [1.3].

$P_{D\text{-}min}$: Minimum exposed deck pressure, in kN/m^2, to be taken as:

- For cargo hold analysis according to Ch 7: $P_{D\text{-}min} = 0$.
- For other cases: $P_{D\text{-}min}$ as defined in Table 30.

χ : Coefficient defined in Table 31.

Table 30 : Minimum pressures on exposed decks for HSM, HSA, FSM load cases

Location	Minimum pressure on exposed deck, $P_{D\text{-}min}$, in kN/m^2	
	$L_{LL} \geq 100$m	$L_{LL} < 100$m
$x_{LL}/L_{LL} \leq 0.75$	34.3	$14.9 + 0.195\, L_{LL}$
$x_{LL}/L_{LL} > 0.75$	$34.3 + (14.8 + a(L_{LL} - 100))\left(4\frac{x_{LL}}{L_{LL}} - 3\right)$	$12.2 + \frac{L_{LL}}{9}\left(5\frac{x_{LL}}{L_{LL}} - 2\right) + 3.6\frac{x_{LL}}{L_{LL}}$
a : Coefficient taken equal to: a = 0.356 for Type A, Type B-60 and Type B-100 freeboard ships a = 0.0726 for Type B freeboard ships. x_{LL} : X-coordinate of the load point measured from the aft end of the freeboard length L_{LL}.		

Table 31 : Coefficient for pressure on exposed decks

Exposed deck location	χ
Freeboard deck	1.00
Superstructure deck including forecastle deck	0.75
1st tier of deckhouse	0.56
2nd tier of deckhouse	0.42
3rd tier of deckhouse	0.32
4th tier of deckhouse	0.25
5th tier of deckhouse	0.20
6th tier of deckhouse	0.15
7th tier of deckhouse and above	0.10

2.2.4 BSR, BSP, OST and OSA load cases

The external pressure, P_D, for BSR, BSP, OST and OSA load cases at any load point of an exposed deck is to be obtained, in kN/m^2, by linear interpolation between the pressures at the port and starboard deck edges (see also Figure 4, Figure 6, Figure 9 and Figure 10):

$$P_{D,stb} = \chi P_{W,D-stb}$$

$$P_{D,pt} = \chi P_{W,D-pt}$$

where:

$P_{W,D\text{-}stb}$: Pressure obtained at starboard deck edge for BSR, BSP, OST or OSA load cases as defined in [1.3], as appropriate.

$P_{W,D\text{-}pt}$: Pressure obtained at port deck edge for BSR, BSP, OST and OSA load cases as defined in [1.3], as appropriate.

χ : Coefficient defined in Table 31.

2.2.5 Envelope of dynamic pressures on exposed deck

The envelope of dynamic pressure at any point of an exposed deck, $P_{D\text{-}max}$, is to be taken as the greatest pressure obtained from any of the load cases determined by [2.2.3] and [2.2.4].

2.3 Load carried on exposed deck

2.3.1 Pressure due to distributed load

If a distributed load is carried on an exposed deck, for example deck cargo or other equipment, the static and dynamic pressures due to this distributed load are to be considered.

The total pressure, P_{dl}, in kN/m^2, due to this distributed load for the static (S) design load scenario is to be taken as:

$$P_{dl} = P_{dl-s}$$

The pressure P_{dl}, in kN/m^2, due to this distributed load for the static plus dynamic (S+D) design load scenario is to be derived for each dynamic load case and is to be taken as:

$$P_{dl} = P_{dl-s} + P_{dl-d}$$

where:

$P_{dl\text{-}s}$: Static pressure, in kN/m^2, due to the distributed load, to be defined by the Designer and, in general, but not less than 10 kN/m^2.

$P_{dl\text{-}d}$: Dynamic pressure, in kN/m^2, due to the distributed load, in kN/m^2, to be taken as:

$$P_{dl-d} = f_\beta \frac{a_Z}{g} P_{dl-s}$$

a_Z : Vertical acceleration, in m/s^2, at the centre of gravity of the distributed load, for the considered load case, to be obtained according to Ch 4, Sec 3, [3.2.4].

2.3.2 Concentrated force due to unit load

If a unit load, for example deck cargo, is carried on an exposed deck, the static and dynamic forces due to the unit load carried are to be considered.

The force F_U, in kN, due to this concentrated load for the static (S) design load scenarios, is to be taken as:

$$F_U = F_{U-s}$$

The force F_U, in kN, due to this concentrated load for the static plus dynamic (S+D) design load scenarios is to be derived for each dynamic load case and is to be taken as:

$$F_U = F_{U-s} + F_{U-d}$$

where:

$F_{U\text{-}s}$: Static force, in kN, due to the unit load to be taken equal to:

$$F_{U-s} = m_U\, g$$

$F_{U\text{-}d}$: Dynamic force, in kN, due to unit load to be taken equal to:

$$F_{U-d} = m_U\, f_\beta\, a_Z$$

m_U : Mass of the unit load carried, in t.

a_Z : Vertical acceleration, in m/s^2, at the centre of gravity of the unit load carried for the considered load case, to be obtained according to Ch 4, Sec 3, [3.2.4].

3 EXTERNAL IMPACT PRESSURES FOR THE BOW AREA

3.1 Application

3.1.1

The impact pressures for the bow area are only to be applied for strength assessment.

3.2 Bottom slamming pressure

3.2.1

The bottom slamming pressure P_{SL}, in kN/m^2, for the bottom slamming design load scenario is to be evaluated for the following two cases:

Case 1: An empty ballast tank or a void space in way of the bottom shell.

$$P_{SL} = 10\, g\sqrt{L}\, f_{SL}\, c_{SL-et} \quad \text{for } L < 170 \text{ m}$$

$$P_{SL} = 130\, g\, f_{SL}\, c_{SL-et}\, e^{c_1} \quad \text{for } L \geq 170 \text{ m}$$

Case 2: A full ballast tank in way of the bottom shell.

$$P_{SL} = 10\, g\sqrt{L}\, f_{SL}\, c_{SL-ft} - 1.25\, \rho g(z_{top} - z) \quad \text{for } L < 170 \text{ m}$$

$$P_{SL} = 130\, g\, f_{SL}\, c_{SL-ft}\, e^{c_1} - 1.25\, \rho g(z_{top} - z) \quad \text{for } L \geq 170 \text{ m}$$

where:

c_1 : Coefficient to be taken as:

$$c_1 = 0 \quad \text{for } L \leq 180 \text{ m}$$

$$c_1 = -0.0125(L - 180)^{0.705} \quad \text{for } L > 180 \text{ m}$$

$c_{SL\text{-}et}$: Slamming coefficient for case with an empty ballast tank or void space:

$$c_{SL-et} = 5.95 - 10.5\left(\frac{T_{F-e}}{L}\right)^{0.2}$$

$c_{SL\text{-}ft}$: Slamming coefficient for case with a full ballast tank:

$$c_{SL-ft} = 5.95 - 10.5\left(\frac{T_{F-f}}{L}\right)^{0.2}$$

f_{SL} : Longitudinal slamming distribution factor, to be taken as:

$$f_{SL} = 0 \quad \text{for } x/L \leq 0.5$$

$$f_{SL} = 1.0 \quad \text{for } x/L = 0.5 + c_2$$

$$f_{SL} = 1.0 \quad \text{for } x/L = 0.65 + c_2$$

$$f_{SL} = 0.5 \quad \text{for } x/L \geq 1$$

Intermediate values of f_{SL} are to be obtained by linear interpolation.

c_2 : Coefficient to be taken as:

$$c_2 = 0.33\, C_B + \frac{L}{2500} \quad \text{but not to be taken greater than 0.35.}$$

$T_{F\text{-}e}$: Design slamming draught at the FP to be provided by the Designer. $T_{F\text{-}e}$ is not to be greater than the minimum draught at the FP indicated in the loading manual for all seagoing conditions where any of the ballast tanks within the bottom slamming region are empty. This includes all loading conditions with tanks inside the bottom slamming region that use the 'sequential' ballast water exchange method, if relevant.

$T_{F\text{-}f}$: Design slamming draught at the FP to be provided by the Designer. $T_{F\text{-}f}$ is not to be greater than the minimum draught at the FP indicated in the loading manual for all seagoing conditions where all ballast tanks within the bottom slamming region are full. This includes all loading conditions with tanks inside the bottom slamming region that use the 'flow-through' ballast water exchange method, if relevant.

z_{top} : Z-coordinate of the highest point of the tank, excluding small hatchways, in m.
For strength assessment of double bottom floors and girders, z_{top} is not to be taken greater than the double bottom height.

3.2.2 Loading manual information

The loading guidance information is to clearly state the design slamming draughts and the ballast water exchange method used for each ballast tank, if any.

Figure 12 : Definition of bow geometry

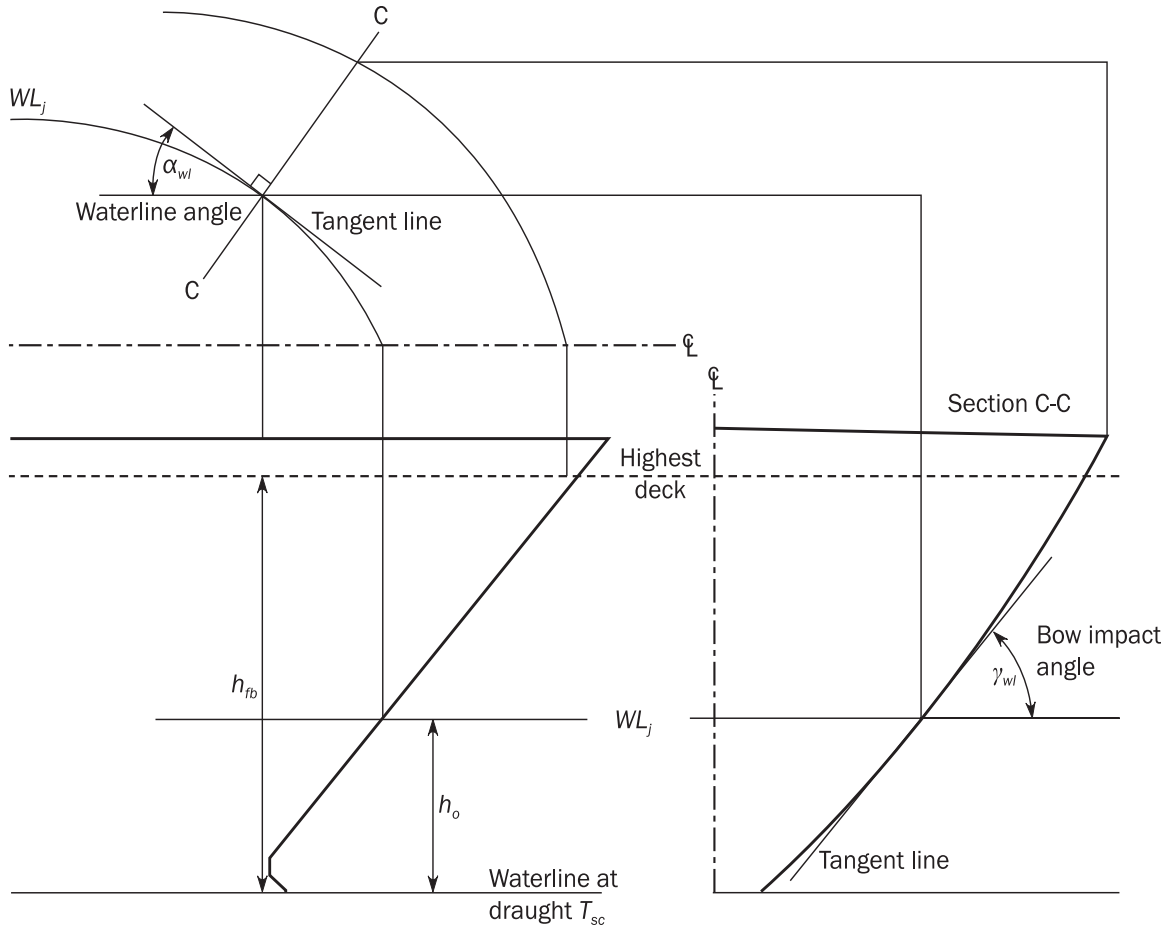

3.3 Bow impact pressure

3.3.1 Design pressures

The bow impact pressure P_{FB}, in kN/m^2, to be considered for the bow impact design load scenario is to be taken as:

$$P_{FB} = 1.025\ f_{FB}\ c_{FB}\ V_{im}^2\ \sin\gamma_{wl}$$

where:

f_{FB} : Longitudinal bow flare impact pressure distribution factor. To be taken as:

$$f_{FB} = 0.55 \quad \text{for } x/L \le 0.9$$
$$f_{FB} = 4\,(x/L - 0.9) + 0.55 \quad \text{for } 0.9 < x/L \le 0.9875$$
$$f_{FB} = 8(x/L - 0.9875) + 0.9 \quad \text{for } 0.9875 < x/L \le 1.0$$
$$f_{FB} = 1.0 \quad \text{for } x/L > 1.0$$

V_{im} : Impact speed, in knots, to be taken as:

$$V_{im} = 0.514\ V_{ref}\ \sin\alpha_{wl} + \sqrt{L}$$

V_{ref} : Forward speed, in knots, to be taken as:

$$V_{ref} = 0.75\ V \quad \text{but not less than 10.}$$

α_{wl} : Local waterline angle, in deg, at the considered position, but not less than 35 deg. See Figure 12.

γ_{wl} : Local bow impact angle, in deg, measured in a vertical plane containing the normal to the shell, from the horizontal to the tangent line at the considered position but not less than 50 deg, as shown in Figure 12. Where this value is not available, it may be taken as:

$$\gamma_{wl} = \tan^{-1}\left(\frac{\tan\beta_{pl}}{\cos\alpha_{wl}}\right)$$

β_{pl} : Local body plan angle, in deg, at the considered position from the horizontal to the tangent line, but not less than 35 deg.

c_{FB} : Coefficient to be taken as:

$$c_{FB} = 1.0 \quad \text{for positions between draughts } T_{BAL} \text{ and } T_{SC}.$$
$$c_{FB} = \sqrt{1.0 + \cos^2\left[90\ \frac{(h_{fb} - 2h_0)}{h_{fb}}\right]} \quad \text{for positions above draught } T_{SC}.$$

h_{fb} : Vertical distance, in m, from the waterline at the draught T_{SC} to the highest deck at side. See Figure 12.

h_0 : Vertical distance, in m, from the waterline at the draught T_{SC} to the considered position. See Figure 12.

4 EXTERNAL PRESSURES ON SUPERSTRUCTURE AND DECKHOUSES

4.1 Application

4.1.1

The external pressures on superstructure and deckhouses are only to be applied for strength assessment.

These pressures are to be considered as dynamic pressures and are to be applied to the appropriate structure without any static pressure load component.

4.1.2

The dynamic load case concept is not to be applied for external pressures on superstructures and deckhouses.

4.2 Exposed wheel house tops

4.2.1

The lateral pressure for exposed wheel house tops, P_D, in kN/m^2, is to be taken as:

$$P_D = 12.5$$

4.3 Sides of superstructures

4.3.1

The design pressure for the external sides of superstructures, P_{SI}, in kN/m^2, is to be taken as:

$$P_{SI} = 2.1 C_w \, c_F \, (C_B + 0.7) \, \frac{20}{10 + z_{SD} - T_{SC}}$$

where:

c_F : Distribution factor according to Table 32.

Table 32 : Distribution factor c_F

Location	c_F
$x/L < 0.2$	$1.0 + \frac{5}{C_B}\left(0.2 - \frac{x}{L}\right)$ without taking x/L less than 0.1
$x/L \geq 0.2$	1.0

4.4 End bulkheads of superstructures and deckhouse walls

4.4.1

The external pressure for the aft and forward external bulkheads of superstructures and deckhouse walls, in kN/m^2, is to be taken as:

$$P_A = f_n \, f_c \, [f_b \, f_d - (z_{SD} - T_{SC})]$$

but is not to be less than $P_{A\text{-}min}$.

where:

f_n : Coefficient defined in Table 33.

f_c : Coefficient, to be taken as:

$$f_c = 0.3 + 0.7 \, \frac{b_1}{B_1} \text{ but not less than 0.475.}$$

For exposed parts of machinery casings, f_c is not to be taken less than 1.0.

f_d : Coefficient, to be taken as:

$$f_d = \frac{L}{10} e^{-(L/300)} - \left(1 - \left(\frac{L}{150}\right)^2\right) \text{ for } L < 150 \text{ m}$$

$$f_d = \frac{L}{10} e^{-(L/300)} \qquad \text{for } 150 \text{ m} \leq L < 300 \text{ m}$$

$$f_d = 11.03 \qquad \text{for } L \geq 300 \text{ m}$$

b_1 : Breadth of deckhouse at the position considered.

B_1 : Actual breadth of ship on the exposed weather deck at the position considered.

f_b : Coefficient defined in Table 34.

$P_{A\text{-}min}$: Minimum lateral pressure, in kN/m^2, as defined in Table 35.

Table 33 : Coefficient f_n

Type of bulkhead	Location	f_n
Unprotected front bulkhead (1)	Lowest tier (2)	$20 + \frac{L_2}{12}$
	Second tier	$10 + \frac{L_2}{12}$
	Third tier and above	$5 + \frac{L_2}{15}$
Protected front bulkhead (1)	All tiers	$5 + \frac{L_2}{15}$
Side bulkheads	All tiers	$5 + \frac{L_2}{15}$
Aft end bulkheads	Abaft amidships	$7 + \frac{L_2}{100} - 8\frac{x}{L_2}$
	Forward of amidships	$5 + \frac{L_2}{100} - 4\frac{x}{L_2}$

(1) The front bulkhead of a superstructure or deckhouse may be considered as protected when it is located less than B_x behind another superstructure or deckhouse, and the width of the front bulkhead being considered is less than the width of the aft bulkhead of the superstructure or deckhouse forward of it. B_x is the local breadth of the ship at the front bulkhead.

(2) The lowest tier is normally that tier which is directly situated above the uppermost continuous deck to which the moulded depth D is measured. However, when (D - T_{SC}) exceeds the minimum non-corrected tabular freeboard (according to ICLL as amended) by at least one standard superstructure height (as defined in Ch 1, Sec 4, [3.3]), then this tier may be defined as the 2nd tier and the tier above as the 3rd tier.

Table 34 : Coefficient f_b

Location of bulkhead (1)	f_b
$\frac{x}{L} < 0.45$	$1.0 + \left(\frac{x/L - 0.45}{C_{B1} + 0.2}\right)^2$
$\frac{x}{L} \geq 0.45$	$1.0 + 1.5\left(\frac{x/L - 0.45}{C_{B1} + 0.2}\right)^2$

where:

C_{B1} : Block coefficient, but not less than 0.60 nor greater than 0.80. For aft deckhouse bulkheads located forward of amidships, C_{B1} may be taken as 0.80.

(1) For deckhouse sides, the deckhouse is to be subdivided into parts of approximately equal length, not exceeding 0.15L each, and x is to be taken as the X-coordinate of the centre of each part considered.

Table 35 : Minimum lateral pressure, $P_{A\text{-}min}$

	$P_{A\text{-}min}$, in kN/m^2	
L	Lowest tier of unprotected fronts	Elsewhere (1)
$90 < L \leq 250$	$25 + \frac{L}{10}$	$12.5 + \frac{L}{20}$
$L > 250$	50	25

(1) For the 4th tier and above, $P_{A\text{-}min}$ is to be taken equal to 12.5 kN/m^2.

5 EXTERNAL PRESSURES ON HATCH COVERS

5.1 Application

5.1.1

The external pressures on hatch covers are only to be applied for strength assessment.

5.2 Green sea loads

5.2.1

The green sea loads at any load point of a hatch cover, P_{HC}, in kN/mm^2, is to be taken as follows:

- For cargo hold analysis according to Ch 7:

  $P_{HC} = P_D - \rho\, g\, (z_{HC} - D)$ without being less than 0.

- For other cases: $P_{HC} = P_{D,min}$ as defined in Table 30.

P_D : Green sea pressure, in kN/mm^2, on the deck in way of the hatch cover obtained according to [2.2], considering χ equal to 1.0.

z_{HC} : z coordinate of the top of the hatch cover, in m.

5.3 Load carried on hatch covers

5.3.1

If a distributed load or a unit load is carried on a hatch cover, the pressure is to be obtained according to [2.3].

SECTION 6
INTERNAL LOADS

SYMBOLS

For symbols not defined in this section, refer to Ch 1, Sec 4

a_X, a_Y, a_Z: Longitudinal, transverse and vertical accelerations, in m/s^2, at x_G, y_G, z_G, as defined in Ch 4, Sec 3, [3.2].

B_H : Breadth of the cargo hold, in m, measured at mid-length of the cargo hold and at the mid height between the top of hopper tank and the bottom of topside tank, see Figure 1.

B_{IB} : Breadth of inner bottom, in m, measured at mid-length of the cargo hold, see Figure 1.

D_1 : Distance, in m, from the baseline to the freeboard deck at side amidships.

d_{sc} : Diameter, in m, of a steel coil.

f_{cd} : Factor for joint probability of occurrence of liquid cargo density and maximum sea state in 25 years design life, to be taken as:

- For strength assessment with FE analysis of cargo tanks filled with liquid cargo:

  f_{cd} = 1.0 for ρ_L > 1.025 t/m^3.

  f_{cd} = 0.88 for ρ_L = 1.025 t/m^3.

- For other cases:

  f_{cd} = 1.0.

f_{dc} : Dry cargo factor taken as:

- f_{dc} = 1.0 for strength assessment,
- f_{dc} = 0.5 for fatigue assessment.

f_β : Coefficient defined in Ch 4, Sec 4.

h_{air} : Height of air pipe or overflow pipe above the top of the tank, in m.

h_C : Height of bulk cargo, in m, from the inner bottom to the upper surface of bulk cargo, as defined in [2.3.1] or [2.3.2].

h_{DB} : Height, in m, of the double bottom at the centreline, measured at mid-length of the cargo hold, see Figure 1.

h_{HPL} : Vertical distance, in m, from the inner bottom at centreline to the upper intersection of hopper tank and side shell or inner side for double side bulk carriers, determined at mid length of the considered cargo hold, as shown in Figure 1.

h_{HPL} = 0 if there is no hopper tank.

h_{HPU} : Vertical distance, in m, from the inner bottom at centreline to the lower intersection of topside tank and side shell or inner side for double side bulk carriers, determined at mid length of the cargo hold at midship, as shown in Figure 1.

h_{LS} : Mean height, in m, of the lower stool, measured from the inner bottom.

h_{max} : Maximum permissible filling level, in m, taken as:

- For ballast tanks: maximum tank height,
- For cargo tanks with cargo density equal to ρ_L: maximum tank height
- For cargo tanks with heavy liquid cargo density equal to ρ_{part} associated with a partially filled cargo tank: h_{part} as defined in Ch 10, Sec 4, [1.2.1].

K_C : Coefficient taken equal to:

$K_C = \cos^2\alpha + (1 - \sin\Psi)\sin^2\alpha$ for inner bottom, hopper tank, transverse and longitudinal bulkheads, lower stool, vertical upper stool, inner side and side shell.

$K_C = 0$ for topside tank, main deck and sloped upper stool.

$K_{C\text{-}f}$: Coefficient taken equal to:

$$K_{C-f} = \tan^2\left(45 - \frac{\Psi}{2}\right)$$

ℓ : Distance, in m, between floors.

ℓ_H : Length of the cargo hold, in m, at the centreline between the transverse bulkheads. This is to be measured to the mid-depth of the corrugated bulkhead(s) if fitted.

ℓ_{lp} : Distance, in m, between outermost dunnage per EPP in the ship X direction, see Figure 10.

ℓ_{st} : Length, in m, of a steel coil.

M : Mass, in t, of the bulk cargo being considered.

M_{Full} : Cargo mass, in t, in a cargo hold corresponding to the volume up to the top of the hatch coaming with a density of the greater of M_H/V_{Full} or 1.0 t/m^3.

$M_{Full} = 1.0\ V_{Full}$ but not less than M_H.

M_H : Cargo mass, in t, in a cargo hold that corresponds to the homogeneously loaded condition at maximum draught with 50% consumables.

M_{HD} : Maximum allowable cargo mass, in t, in a cargo hold according to design loading conditions with specified holds empty at maximum draught with 50% consumables and all ballast water tanks in cargo hold region empty.

$M_{sc\text{-}ib}$: Equivalent mass of a steel coil, in t, on inner bottom, as defined in [4.3.1]

$M_{sc\text{-}hs}$: Equivalent mass of a steel coil, in t, on hopper side, as defined in [4.3.2].

n_1 : Number of tiers of steel coils.

n_2 : Number of load points per EPP of the inner bottom, see [4.1.3].

n_3 : Number of dunnages supporting one row of steel coils.

P_{drop} : Overpressure, in kN/m^2, due to sustained liquid flow through air pipe or overflow pipe in case of overfilling or filling during flow through ballast water exchange. It is to be defined by the designer, but not to be less than 25 kN/m^2.

P_{PV} : Design vapour pressure, in kN/m^2, but not less than 25 kN/m^2.

perm : Permeability of cargo, to be taken as:

perm = 0.3 for iron ore, coal cargoes and cement.

perm = 0 for steel coils and steel packed products.

R : Vertical coordinate of the ship rotation centre, defined in Ch 4, Sec 3.

s_C : Spacing of corrugations, in m, as defined in Ch 3, Sec 6, [10.4.2].

T_θ : Roll period, in s, as defined in Ch 4, Sec 3, [2.1.1].

V_{Full} : Volume, in m^3, of cargo hold up to top of the hatch coaming, taken as:

$V_{Full} = V_H + V_{HC}$.

V_H : Volume, in m^3, of cargo hold up to level of the intersection of the main deck with the hatch coaming excluding the volume enclosed by hatch coaming, see Figure 1.

V_{HC} : Volume, in m^3, of the hatch coaming, from the level of the intersection of the main deck with the hatch side coaming to the top of the hatch coaming, determined for the cargo hold at midship, as shown in Figure 1.

V_{TS} : Total volume, in m^3, of the portion of the lower bulkhead stools within the cargo hold length ℓ_H and inboard of the hopper tanks.

W : Mass, in t, of a steel coil.

x, y, z : X, Y and Z coordinates, in m, of the load point with respect to the reference coordinate system defined in Ch 4, Sec 1, [1.2.1].

x_G, y_G, z_G: X, Y and Z coordinates, in m, of the volumetric centre of gravity of the tank or fully filled cargo hold, i.e. V_{Full}, considered with respect to the reference coordinate system defined in Ch 4, Sec 1, [1.2].

In case of partially filled cargo hold, x_G, y_G, z_G to be taken as follows:

x_G, y_G: Volumetric centre of gravity of the cargo hold.

$z_G = h_{DB} + h_{C\text{-}cl} / 2$

z_{top} : Z coordinate of the highest point of tank, excluding small hatchways, in m.

z_C : Height of the upper surface of the cargo above the baseline in way of the load point, in m, to be taken as:

$z_C = h_{DB} + h_C$.

α : Angle, in deg, between panel considered and the horizontal plane.

φ : Pitch angle, in deg, defined in Ch 4, Sec 3, [2.1.2].

ψ : Assumed angle of repose, in deg, of bulk cargo (considered drained and removed); to be taken as:

$\psi = 30°$ in general.
$\psi = 35°$ for iron ore.
$\psi = 25°$ for cement.

ρ_c : Density of bulk cargo, in t/m^3, as defined in [2.3.3].

ρ_L : Density of liquid in the tank and ballast hold, in t/m^3, but not less than:

- For strength assessment:

  ρ_L = 1.025 for all liquids including oil cargoes. If a tank filled at 98% is intended to carry heavier liquid cargoes than 1.025 (i.e. $\rho_{max\text{-}LM} > 1.025$), then $\rho_L = \rho_{max\text{-}LM}$.

- For fatigue assessment:

  ρ_L = 0.9 for liquid cargoes.

  ρ_L= 1.025 for all other liquids.

$\rho_{max\text{-}LM}$: Maximum liquid cargo density in t/m^3, associated with a full tank at 98%, from any loading condition in the ship's loading manual or value specified by the designer.

ρ_{part} : Maximum permissible high liquid cargo density, in t/m^3, associated with a partially filled cargo tank but not taken less than ρ_L considered for strength assessment.

ρ_{slh} : Liquid density, in t/m^3, to be used for sloshing assessment, taken as:

$\rho_{slh} = \rho_{part}$ for heavy liquid cargo density associated with partial filling of cargo tank
$\rho_{slh} = \rho_L$ for all other cases

ρ_{ST} : Density of steel, in t/m^3, to be taken as 7.85

θ : Roll angle, in deg, defined in Ch 4, Sec 3, [2.1.1].

θ_h : Angle, in deg, between inner bottom plate and hopper sloping plate. in general θ_h is such that:

$$\tan\theta_h = \frac{2h_{HPL}}{B_H - B_{IB}}$$

1 PRESSURES DUE TO LIQUIDS

1.1 Application

1.1.1 Pressures for the strength and fatigue assessments of intact conditions

The internal pressure due to liquid acting on any load point of a tank and ballast hold boundary, in kN/m^2, for the static (S) design load scenarios, given in Ch 4, Sec 7, is to be taken as:

$P_{in} = P_{ls}$ but not less than 0.

The internal pressure due to liquid acting on any load point of a tank and ballast hold boundary, in kN/m^2, for the static plus dynamic (S+D) design load scenarios is to be derived for each dynamic load case and is to be taken as:

$P_{in} = P_{ls} + P_{ld}$ but not less than 0.

where:

P_{ls} : Static pressure due to liquid in tanks and ballast holds, in kN/m^2, as defined in [1.2].

P_{ld} : Dynamic inertial pressure due to liquid in tanks and ballast holds, in kN/m^2, as defined in [1.3].

1.1.2 Pressures for the strength assessments of flooded conditions

The internal pressure in flooded condition, in kN/m^2, acting on any load point of the watertight boundary of a hold, tank or other space for the flooded static (S) design load scenarios, given in Ch 4, Sec 7, is to be taken as:

$P_{in} = P_{fs}$ but not less than $\rho g d_0$

The internal pressure in flooded condition, in kN/m^2, acting on any load point of the watertight boundary of a hold, tank or other space for the flooded static plus dynamic (S+D) design load scenarios, is to be derived for each dynamic load case and is to be taken as:

$P_{in} = P_{fs} + P_{fd}$ but not less than $\rho g d_0$

where:

P_{fs} : Static pressure of seawater in flooded condition in the compartment, in kN/m^2, as defined in [1.4].

P_{fd} : Dynamic inertial pressure of seawater in flooded condition in the compartment, in kN/m^2, as defined in [1.5].

d_0 : Distance, in m, to be taken as:

$d_0 = 0.02L$ for $L < 120$ m.

$d_0 = 2.4$ for $L \geq 120$ m.

For corrugations of vertically corrugated bulkheads of bulk carrier cargo holds, the flooded pressures and forces specified in [3] for bulk cargoes are to be applied.

1.2 Static liquid pressure

1.2.1 Normal operations at sea

The static pressure due to liquid in tanks and ballast holds, P_{ls} during normal operations at sea, in kN/m^2, is to be taken as:

$P_{ls} = f_{cd}\ \rho_L\ g\ (Z_{top} - Z) + P_{PV}$ for cargo tanks filled with liquid cargo.

$P_{ls} = \rho_L\ g\ (z_{top} - z + 0.5\ h_{air})$ for other cases.

1.2.2 Harbour/sheltered water operations

The static pressure, P_{ls} due to liquid in tanks and ballast holds for harbour/sheltered water operations, in kN/m^2, is to be taken as:

$P_{ls} = \rho_L\ g\ (z_{top} - z + h_{air}) + P_{drop}$ for ballast tanks

$P_{ls} = \rho_L\ g\ (z_{top} - z) + P_{PV}$ for cargo tanks filled with liquid cargo

$P_{ls} = \rho_L\ g\ (z_{top} - z + 0.5\ h_{air})$ for ballast holds with h_{air} = 0 and for other cases

1.2.3 Sequential ballast water exchange

The static pressure, P_{ls} due to liquid in ballast tanks associated with sequential ballast water exchange operations, in kN/m^2, is to be taken as:

$P_{ls} = \rho_L\ g\ (z_{top} - z + 0.5\ h_{air})$

1.2.4 Flow through ballast water exchange

The static pressure, P_{ls} due to liquid in ballast tanks associated with flow through ballast water exchange operations, in kN/m^2, is to be taken as:

$P_{ls} = \rho_L\ g\ (z_{top} - z + h_{air}) + P_{drop}$

1.2.5 Ballasting using ballast water treatment system

The static pressure, P_{ls} due to liquid in tanks and ballast holds associated with ballasting operations using a ballast water treatment system is to be taken as defined for sequential ballast exchange in [1.2.3]. The ship designer has to inform the Society if the ballast water treatment system implies additional pressure to be considered as P_{drop}, etc in addition to the pressure defined in [1.2.3].

1.2.6 Static liquid pressure for the fatigue assessment

The static pressure due to liquid in tanks and ballast holds, P_{ls} to be used for the fatigue assessment, in kN/m^2, is to be taken as:

$P_{ls} = \rho_L\ g\ (z_{top} - z)$ for all tanks (cargo and water ballast tanks, ballast hold and other tanks).

1.3 Dynamic liquid pressure

1.3.1

The dynamic pressure, P_{ld} due to liquid in tanks and ballast holds, in kN/m^2 is to be taken as:

$P_{ld} = f_\beta f_{cd} \rho_L\ [a_Z\ (z_0 - z) + f_{ull\text{-}l}\ a_X\ (x_0 - x) + f_{ull\text{-}t}\ a_Y\ (y_0 - y)]$

where:

$f_{ull\text{-}l}$: Longitudinal acceleration correction factor for the ullage space above the liquid in tanks and ballast holds, taken as:

- For strength assessment:

  $f_{ull\text{-}l}$ = 0.62 for cargo tanks filled with any liquids including water ballast.

  $f_{ull\text{-}l}$ = 1.0 for other cases.

- For fatigue assessment:

  $$f_{ull-l} = 0.5 + \frac{|z_0 - z|}{\ell_{fs}} \frac{180}{\varphi\pi}$$ for cargo tanks and ballast holds.

  $f_{ull\text{-}l}$ = 1.0 for other cases.

  $f_{ull\text{-}l}$ is not to be less than 0.0 nor greater than 1.0

ℓ_{fs} : Cargo tank length at the top of the tank or length of the ballast hold hatch coaming, in m.

$f_{ull\text{-}t}$: Transverse acceleration correction factor to account for the ullage space above the liquid in tanks and ballast holds, taken as:

- For strength assessment:

  $f_{ull\text{-}t}$ = 0.67 for cargo tanks filled with any liquids including water ballast.

  $f_{ull\text{-}t}$ = 1.0 for other cases.

- For fatigue assessment:

  $$f_{ull-t} = 0.5 + \frac{|z_0 - z|}{b_{top}} \frac{180}{\theta\pi}$$ for cargo tanks and ballast holds.

  $f_{ull\text{-}t}$ = 1.0 for other cases.

  $f_{ull\text{-}t}$ is not to be less than 0.0 nor greater than 1.0

b_{top} : Cargo tank breadth at the top of the tank or breadth of the ballast hold hatch coaming, in m, determined at mid length of the tank or ballast hold hatch coaming.

x_0 : *X* coordinate, in m, of the reference point.

y_0 : *Y* coordinate, in m, of the reference point.

z_0 : *Z* coordinate, in m, of the reference point.

The reference point is to be taken as the point with the highest value of V_j, calculated for all points that define the upper boundary of the tank or ballast hold as follows:

$$V_j = a_X (x_j - x_G) + a_Y (y_j - y_G) + (a_Z + g) (z_j - z_G)$$

where:

x_j : *X* coordinate, in m, of the point *j* on the upper boundary of the tank or ballast hold.

y_j : *Y* coordinate, in m, of the point *j* on the upper boundary of the tank or ballast hold.

z_j : *Z* coordinate, in m, of the point *j* on the upper boundary of the tank or ballast hold.

1.4 Static pressure in flooded conditions

1.4.1 Static pressure in flooded compartments

The static pressure, P_{fs} in kN/m^2, for watertight boundaries of flooded compartments is to be taken as:

$$P_{fs} = \rho g (z_{FD} - z)$$ but not less than 0.

where:

z_{FD} : *Z* coordinate, in m, of the freeboard deck at side in way of the transverse section considered or the deepest equilibrium waterline in the damaged condition whichever is the greater.

1.5 Dynamic pressure in flooded conditions

1.5.1 Dynamic pressure in flooded compartments

The dynamic pressure, P_{fd}, in kN/m^2, for watertight boundaries of flooded compartments is to be taken as:

$P_{fd} = f_\beta \ \rho \ [a_Z (z_{0FD} - z) + f_{ull\text{-}l} \ a_X (x_0 - x) + f_{ull\text{-}t} \ a_Y (y_0 - y)]$

where:

z_{0FD} : Z coordinate of the effective reference point, in m, for a flooded compartment taken as:

When $z_{FD} > z_0$, $z_{0FD} = z_0$

When $z_{FD} \leq z_0$, $z_{0FD} = z_{FD}$

$f_{ull\text{-}l}$, $f_{ull\text{-}t}$: Longitudinal and transverse acceleration correction factors:

When $z_{FD} > z_0$, $f_{ull\text{-}l}$ and $f_{ull\text{-}t}$ are to be taken as defined in [1.3.1].

When $z_{FD} \leq z_0$, $f_{ull\text{-}l}$ = 1.0 and $f_{ull\text{-}t}$ = 1.0.

2 PRESSURES AND FORCES DUE TO DRY BULK CARGO

2.1 Application

2.1.1

The pressures and forces due to dry cargo in bulk in a cargo hold are to be determined both for fully and partially filled cargo holds according to [2.4] and [2.5].

2.2 Hold definitions

2.2.1 Geometrical characteristics

Figure 1 gives the main geometrical elements of a bulk carrier cargo hold.

Figure 1 : Definition of cargo hold parameters for bulk carrier

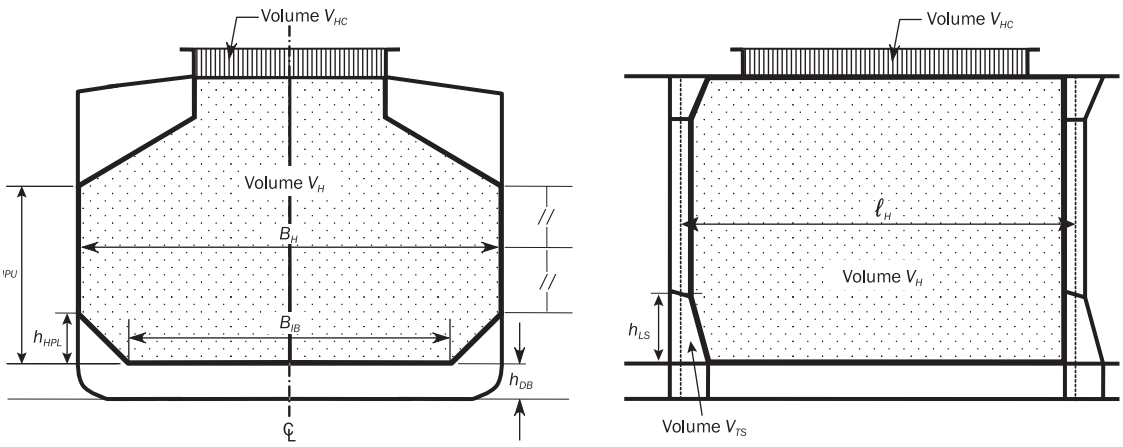

2.2.2 Fully and partially filled cargo holds

The definitions of a fully and partially filled dry bulk cargo holds are as follow:

a) Fully filled hold:
The dry bulk cargo density is such that the cargo hold is filled up to the top of the hatch coaming, as shown in Figure 2.

The upper surface of the cargo and its effective height in the hold h_C are to be determined in accordance with [2.3.1].

b) Partially filled hold:
The cargo density is such that the cargo hold is not filled up to the top of the hatch coaming, as shown in Figure 3 or Figure 4.

The upper surface of the cargo and its effective height in the hold h_C are to be determined in accordance with [2.3.2].

2.3 Dry cargo characteristics

2.3.1 Definition of the upper surface of dry bulk cargo for full cargo holds

For a fully filled cargo hold as defined in [2.2.2], including non-prismatic holds, the effective upper surface of the cargo is an equivalent horizontal surface at h_C, in m, above inner bottom at centreline as shown in Figure 2.

The value of h_C is to be calculated at mid length of the cargo hold at the midship, is to be kept constant over the cargo hold region area and is determined as follows:

$$h_C = h_{HPU} + h_O$$

where:

$$h_O = \frac{S_A}{B_H}$$

$$S_A = S_O + \frac{V_{HC}}{\ell_H}$$

S_O : Shaded area, in m^2, above the lower intersection of topside tank and side shell or inner side, as the case may be, and up to the level of the intersection of the main deck with the hatch coaming, determined for the cargo hold at the midship as shown in Figure 2.

Figure 2 : Definition of effective upper surface of cargo for a full cargo hold

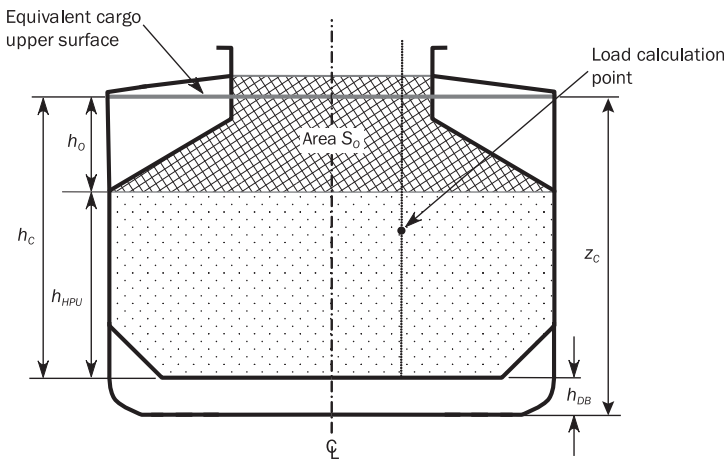

2.3.2 Definition of upper surface of dry bulk cargo for partially filled cargo holds

For any partially filled cargo hold, as defined in [2.2.2], including non-prismatic holds, the effective upper surface of the cargo is to be made of three parts:

- One central horizontal surface of breadth $B_H/2$, in m, at a height $h_{C\text{-}CL}$, in m, above the inner bottom
- A sloped surface at each side with an angle $\psi/2$, in degrees, between the central horizontal surface, and the side shell or inner hull, as shown in Figure 3, or the hopper plating, as shown in Figure 4, as the case may be.

The height of cargo surface h_C, in m, is to be calculated at mid length of the considered cargo hold and is to be taken as constant over the length of the hold as follows:

For $|y| \le \frac{B_H}{4}$: $h_C = h_{C\text{-}CL}$

For $\frac{B_H}{4} < |y| \le \frac{B_2}{2}$: $h_C = h_{C-CL} - \left(|y| - \frac{B_H}{4}\right) \tan\frac{\psi}{2}$

For $|y| > \frac{B_2}{2}$: $h_C = 0$

where:

h_1 : Height, in m, to be taken as:

$$h_1 = \frac{M}{\rho_C \cdot B_H\ \ell_H} - \left(\frac{B_H + B_{IB}}{2B_H}\right) h_{HPL} - \frac{3}{16} B_H \tan\frac{\psi}{2} + \frac{V_{TS}}{B_H\ \ell_H}$$

- For $h_1 \ge 0$ as shown in Figure 3:

$$h_{C-CL} = h_{HPL} + h_1 + h_2$$

$$h_2 = \frac{B_H}{4} \tan\frac{\psi}{2}$$

$$B_2 = B_H$$

- For $h_1 < 0$ as shown in Figure 4

$$h_{C-CL} = h_{11} + h_{22}$$

$$h_{11} = h_{HPL}\left(\frac{B_2 - B_{IB}}{B_H - B_{IB}}\right)$$

$$h_{22} = \left(\frac{B_2}{2} - \frac{B_H}{4}\right) \tan\frac{\psi}{2}$$

$$B_2 = \sqrt{\frac{\frac{1}{\ell_H}\left(\frac{M}{\rho_C} + V_{TS}\right) + \frac{1}{2}\left(\frac{h_{HPL} \cdot B_{IB}^2}{B_H - B_{IB}}\right) + \frac{B_H^2}{16}\tan\frac{\psi}{2}}{\frac{1}{2}\left[\left(\frac{h_{HPL}}{B_H - B_{IB}}\right) + \frac{1}{2}\tan\frac{\psi}{2}\right]}}$$

$h_{C\text{-}CL}$: Height, in m, of the cargo surface at the centreline, as shown in Figure 3 and Figure 4

B_2 : Maximum breadth of the cargo, in m, as shown in Figure 3 and Figure 4

Figure 3 : Definition of the effective upper surface of cargo for a partially filled cargo hold when $h_1 \ge 0$

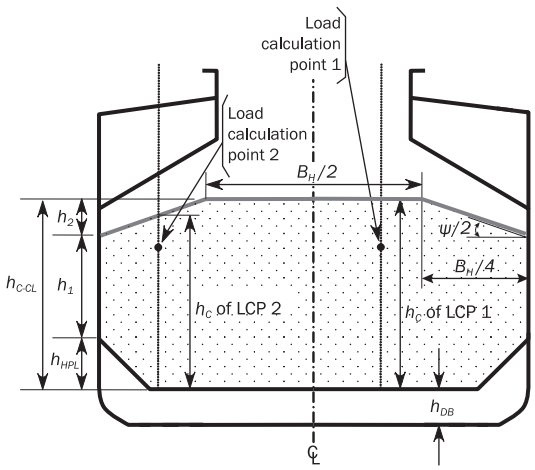

Figure 4 : Definition of the effective upper surface of cargo for a partially filled cargo hold when $h_1 < 0$

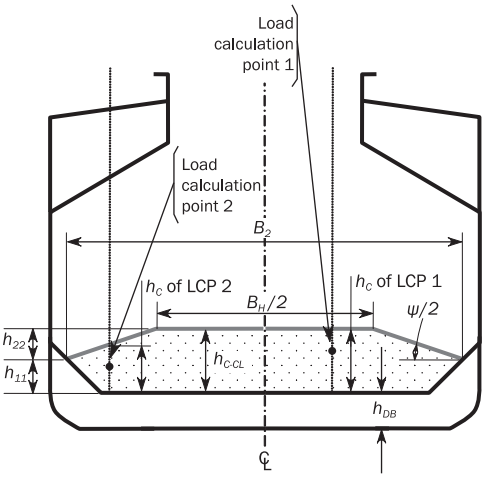

2.3.3 Mass and density

The dry cargo mass and the density of the cargo are to be taken as follows:

- For strength assessment in intact condition: the values defined in Table 1
- For fatigue assessment: the values defined in Table 2
- For strength assessment in flooded condition: the values defined in Table 3

Table 1 : Dry bulk cargo mass and density for strength assessment in intact condition

Ship type	Cargo mass Cargo density	Homogeneous loading condition		Alternate loading condition	
		Fully filled hold	Partially filled hold	Fully filled hold	Partially filled hold
No BC notation	M	$M = M_{Full}$	N/A	N/A	
	ρ_C	Maximum value specified in the loading manual			
BC-C	M	$M = M_{Full}$	N/A	N/A	
	ρ_C	$\rho_C = \frac{M_{Full}}{V_{Full}}$ but not less than 1.0			
BC-B	M	$M = M_{Full}$	$M = M_H$	N/A	
	ρ_C	$\rho_C = \frac{M_{Full}}{V_{Full}}$ but not less than 1.0	$\rho_C = 3.0$ (1)		
BC-A	M	$M = M_{Full}$	$M = M_H$	$M = M_{HD} + 0.1M_H$	$M = M_{HD} + 0.1M_H$
	ρ_C	$\rho_C = \frac{M_{Full}}{V_{Full}}$ but not less than 1.0	$\rho_C = 3.0$ (1)	$\rho_C = \frac{M_{HD} + 0.1\ M_H}{V_{Full}}$	$\rho_C = 3.0$ (1)

(1) To be taken as 3.0 unless an alternative maximum cargo density is specified in the loading manual.

Table 2 : Dry bulk cargo mass and density for fatigue assessment

Ship type	Cargo mass Cargo density	Homogeneous loading condition (Fully filled hold)	Alternate loading condition (Partially filled hold)
No BC notation	M	$M = M_H$	N/A
	ρ_C	ρ_C = maximum value specified in the loading manual	
BC-C	M	$M = M_H$	
	ρ_C	$\rho_C = \left(\frac{M_H}{V_{Full}}\right)$	
BC-B	M	$M = M_H$	
	ρ_C	$\rho_C = \left(\frac{M_H}{V_{Full}}\right)$	
BC-A	M	$M = M_H$	$M = M_{HD}$
	ρ_C	$\rho_C = \left(\frac{M_H}{V_{Full}}\right)$	$\rho_C = 3.0$ (1)

(1) To be taken as 3.0 unless an alternative maximum cargo density is specified in the loading manual.

Table 3 : Dry bulk cargo mass and density for strength assessment in flooded condition

Ship type	Cargo mass Cargo density	Homogeneous loading condition		Alternate loading condition		
		Fully filled hold	Partially filled hold	Fully filled hold	Partially filled hold	Hold loaded with $\rho_C \leq 1.78$ t/m³ (2)
No BC notation	M	$M = M_H$	N/A	N/A		
	ρ_C	ρ_C = maximum value specified in the loading manual				
BC-C	M	$M = M_H$	N/A	N/A		
	ρ_C	$\rho_C = \left(\frac{M_H}{V_{Full}}\right)$				
BC-B	M	$M = M_H$	$M = M_H$	N/A		
	ρ_C	$\rho_C = \left(\frac{M_H}{V_{Full}}\right)$	$\rho_C = 3.0$ (1)			
BC-A	M	$M = M_H$	$M = M_H$	$M = M_{HD}$	$M = M_{HD}$	$M = M_{HD}$
	ρ_C	$\rho_C = \left(\frac{M_H}{V_{Full}}\right)$	$\rho_C = 3.0$ (1)	$\rho_C = \left(\frac{M_{HD}}{V_{Full}}\right)$	$\rho_C = 3.0$ (1)	$\rho_C = 1.78$

(1) To be taken as 3.0 unless an alternative maximum cargo density is specified in the loading manual.

(2) To be applied for bulk carriers that are required to carry cargoes with a density less than or equal to 1.78 t/m³.

2.3.4 FE application

The following process is to be applied for the bulk cargo pressure loads used in FE analysis:

a) Determine h_c according to [2.3.1] for fully filled cargo hold or [2.3.2] for partially filled cargo hold.

b) Determine the corresponding static pressure as defined in [2.4.2] and static shear pressure as defined in [2.5.2] using ρ_c and apply them in the FE model.

c) Calculate the actual mass of cargo, M_{actual}, in t.

d) Determine the effective cargo density, in t/m^3:

$$\rho_{eff} = \frac{M}{M_{actual}} \rho_c$$

e) Calculate the final pressure distribution and shear load using ρ_{eff} instead of ρ_c.

2.4 Dry bulk cargo pressures

2.4.1 Total pressure

The total pressure due to dry bulk cargo acting on any load point of a cargo hold boundary, in kN/m^2, is to be taken as:

$P_{in} = P_{bs}$ For strength assessment of intact conditions for static (S) design load scenarios, given in Ch 4, Sec 7

$P_{in} = P_{bs} + P_{bd}$ For strength assessment of intact conditions and fatigue assessment for static plus dynamic (S+D) design load scenarios, given in Ch 4, Sec 7

but not less than 0.

where:

P_{bs} : Static pressure due to dry bulk cargo, in kN/m^2, as defined in [2.4.2].

P_{bd} : Dynamic inertial pressure due to dry bulk cargo in cargo holds, in kN/m^2, as defined in [2.4.3].

Static and dynamic pressures as defined in [2.4.2] and [2.4.3] for FE analysis are to be determined using ρ_{eff} instead of ρ_c.

2.4.2 Static pressure

The dry bulk cargo static pressure P_{bs}, in kN/m^2, is to be taken as:

$P_{bs} = \rho_C \, g K_C \, (z_C - z)$ but not less than 0.

2.4.3 Dynamic pressure

The dry bulk cargo dynamic pressure P_{bd}, in kN/m^2, for each load case is to be taken as:

$P_{bd} = f_\beta \, \rho_C \, [0.25 \, a_X \, (x_G - x) + 0.25 \, a_Y \, (y_G - y) + f_{dc} K_C \, a_Z \, (z_C - z)]$ for $z \le z_c$

$P_{bd} = 0$ for $z > z_c$

2.5 Shear load

2.5.1 Application

For FE strength assessment and FE fatigue assessment, the following shear load pressures are to be considered in addition to the dry bulk cargo pressures defined in [2.4] when the load point elevation, z, is lower or equal to z_c:

- For static (S) design load scenarios, given in Ch 4, Sec 7: Static shear load, $P_{bs\text{-}s}$, due to gravitational forces acting on hopper tanks and lower stools plating, as defined in [2.5.2].

- For static plus dynamic (S+D) design load scenarios, given in Ch 4, Sec 7: The following dynamic shear load pressures:

  $P_{bs\text{-}s} + P_{bs\text{-}d}$ for the hopper tank and the lower stool plating, as defined in [2.5.3].

  $P_{bs\text{-}dx}$ for the inner bottom plating in the longitudinal direction, as defined in [2.5.4].

  $P_{bs\text{-}dy}$ for the inner bottom plating in the transverse direction, as defined in [2.5.4].

Shear loads as defined in [2.5.2] to [2.5.4] for FE analysis are to be determined using ρ_{eff} instead of ρ_c.

[RCN1 to 01 JAN 2020]

2.5.2 Static shear load on the hopper tank and lower stool plating

The static shear load pressure, $P_{bs\text{-}s}$ (positive downward to the plating) due to dry bulk cargo gravitational forces acting on hopper tank and lower stool plating, in kN/m^2, is to be taken as:

$$P_{bs-s} = \rho_C \, g \, \frac{(1 - K_C)\,(z_C - z)}{\tan\alpha}$$

2.5.3 Dynamic shear load on the hopper tank and lower stool plating

The dynamic shear load pressure, $P_{bs\text{-}d}$ (positive downward to the plating) due to dry bulk cargo forces on the hopper tank and lower stool plating, in kN/m^2, for each dynamic load case is to be taken as:

$$P_{bs-d} = f_\beta \, \rho_C \, a_z \, \frac{(1 - K_C)\,(z_C - z)}{\tan\alpha}$$

2.5.4 Dynamic shear load along the inner bottom plating for FE analyses

The dynamic shear load pressures, $P_{bs\text{-}dx}$ in the longitudinal direction (positive to bow) due to dry bulk cargo forces acting along the inner bottom plating, in kN/m^2, for each dynamic load case is to be taken respectively as:

$$P_{bs-dx} = -0.75 \, f_\beta \, \rho_C \, a_X \, h_C$$

The dynamic shear load pressures, $P_{bs\text{-}dy}$ in the transverse direction (positive to port) due to dry bulk cargo forces acting along the inner bottom plating, in kN/m^2, for each dynamic load case is to be taken respectively as

$$P_{bs-dy} = -0.75 \, f_\beta \, \rho_C \, a_y \, h_C$$

The dynamic shear load pressures $P_{bs\text{-}dx}$ and $P_{bs\text{-}dy}$ are only used for FE strength assessment.

3 PRESSURES AND FORCES DUE TO DRY CARGOES IN FLOODED CONDITIONS

3.1 Vertically corrugated transverse watertight bulkheads

3.1.1 Application

The pressure defined in this sub-article applies to vertically corrugated transverse watertight bulkheads of the cargo holds of bulk carriers for the assessment in flooded conditions.

Each cargo hold is to be considered individually flooded, see Figure 5, Figure 6 and Figure 7.

3.1.2 General

The loads to be considered as acting on each bulkhead are those given by the combination of loads induced by cargo loads with those induced by the flooded loads of one hold adjacent to the bulkhead under examination. In any case, the pressure due to the flooded loads without cargo is also to be considered.

The most severe combinations of cargo induced loads and flooded loads are to be used for the check of the scantlings of each bulkhead, depending on the loading conditions included in the loading manual considering the individual flooded condition of both loaded and empty holds:

- Homogeneous loading conditions;
- Non-homogeneous loading conditions;

For the purpose of this article, the following items are defined as:

- Design load limits:

  The specified design load limits for the cargo holds are to be represented by loading conditions defined by the designer in the loading manual.

- Maximum cargo mass to consider:

  Unless the ship is intended to carry, in non-homogeneous conditions, only iron ore or cargo having bulk density equal to or greater than 1.78 t/m^3, the maximum mass of cargo which may be carried in the hold is also to be considered to fill that hold up to the top of the hatch coaming.

- Homogeneous loading conditions:

  Homogeneous loading condition means a loading condition in which the ratio between the highest and the lowest filling level, evaluated for each hold, does not exceed 1.20, to be corrected for different cargo densities.

- Packed cargoes:

  Holds carrying packed cargoes (such as steel mill products) are to be considered as empty.

- Unconsidered loading conditions:

  Non-homogeneous part loading conditions associated with multi-port loading and unloading operations for homogeneous loading conditions do not need to be considered for the verification of these requirements.

3.1.3 Flooded level

The flooded level z_F is the distance, in m, measured vertically from the baseline with the ship in the upright position, and obtained from Table 4.

Table 4 : Flooded level z_F, in m, for vertically corrugated transverse bulkheads

Bulk carrier type	Loading condition	Vertically corrugated transverse bulkhead position	
		Foremost	Others
Bulk carriers less than 50,000 t deadweight with Type B freeboard	Non-homogeneous loading conditions with cargo density less than 1.78 t/m^3	$z_F = 0.9\ D_1$	$z_F = 0.8\ D_1$
	Other cases	$z_F = 0.95\ D_1$	$z_F = 0.85\ D_1$
Other bulk carriers	Non-homogeneous loading conditions with cargo density less than 1.78 t/m^3	$z_F = 0.95\ D_1$	$z_F = 0.85\ D_1$
	Other cases	$z_F = D_1$	$z_F = 0.9\ D_1$

3.1.4 Flooded patterns

Three different flooded patterns are to be considered:

- The flooded level is below the upper surface of the cargo, (see Figure 5: $z_C > z_F$)
- The flooded level is above the upper surface of the cargo, (see Figure 6: $z_C \leq z_F$)
- The flooded hold is empty, (see Figure 7: $z_C = h_{DB}$)

Figure 5 : Flooded level below upper surface of bulk cargo

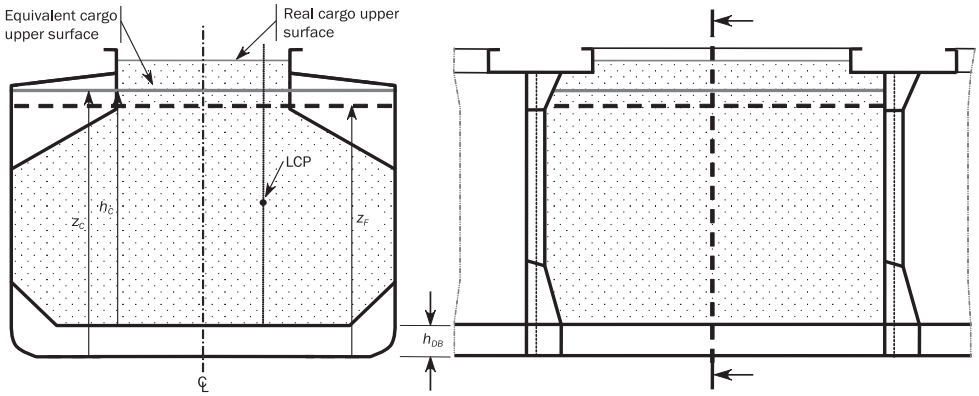

Figure 6 : Flooded level above upper surface of bulk cargo

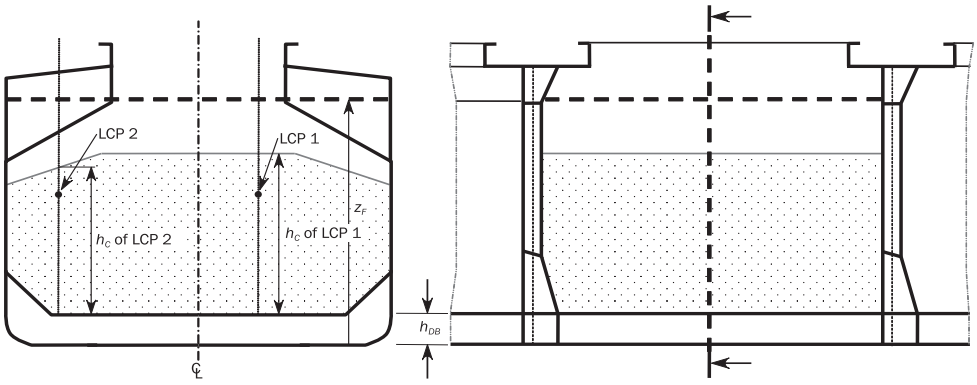

Figure 7 : Flooded cargo hold without cargo

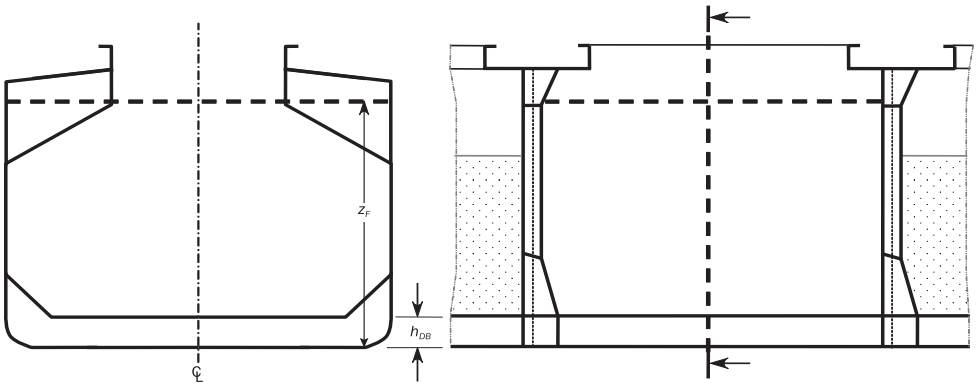

3.1.5 Pressures and forces on vertically corrugated transverse bulkheads of flooded cargo holds

The static pressure $P_{bf\text{-}s}$, in kN/m^2, at any point of the vertically corrugated transverse bulkhead located at a level z from the baseline is given in Table 5 for each flooded pattern defined in [3.1.4].

The force $F_{bf\text{-}s}$, in kN, acting on a corrugation of a transverse bulkhead is given by Table 6 for each flooded pattern defined in [3.1.4].

where:

$P_{bf\text{-}s\text{-}LE}$: Static pressure calculated according to Table 5 for $z = h_{LS} + h_{DB}$.

Table 5 : Static pressure on vertically corrugated transverse bulkhead of a flooded cargo hold $P_{bf\text{-}s}$

Flooded case	Load point position	Pressure $P_{bf\text{-}s}$, in kN/m^2
$z_C > z_F$	$z > z_C$	$P_{bf-s} = 0$
	$z_C \geq z \geq z_F$	$P_{bf-s} = \rho_C\, g\, (z_C - z)\, K_{C-f}$
	$z_F > z \geq h_{DB}$	$P_{bf-s} = \rho g\, (z_F - z) + [\rho_C\, (z_C - z) - \rho\, (1 - perm)\, (z_F - z)]\, g K_{C-f}$
$h_{DB} \leq z_C \leq z_F$	$z > z_F$	$P_{bf-s} = 0$
	$z_F \geq z \geq z_C$	$P_{bf\text{-}s} = \rho g\, (z_F - z)$
	$z_C > z \geq h_{DB}$	$P_{bf-s} = \rho g\, (z_F - z) + [\rho_C - \rho\, (1 - perm)]\, g\, (z_C - z)\, K_{C-f}$

Table 6 : Force acting on a corrugation in the flooded cargo holds $F_{bf\text{-}s}$

Flooded case	Force $F_{bf\text{-}s}$, in kN
$z_C > z_F$	$F_{bf-s} = s_C \left\{ \rho_C\, g\, \frac{(z_C - z_F)^2}{2} K_{C-f} + \left[\frac{\rho_C\, g\, (z_C - z_F)\, K_{C-f} + P_{bf-s-LE}}{2} \right] (z_F - h_{DB} - h_{LS}) \right\}$
$z_F \geq z_C$	$F_{bf-s} = s_C \left\{ \rho g\, \frac{(z_F - z_C)^2}{2} + \left[\frac{\rho g\, (z_F - z_C) + P_{bf-s-LE}}{2} \right] (z_C - h_{DB} - h_{LS}) \right\}$

3.1.6 Pressures and forces on vertically corrugated transverse bulkheads of non-flooded cargo holds

The static pressure P_{bs}, in kN/m^2, at a point of the vertically corrugated transverse bulkhead located, located at the level z from the baseline, due to dry bulk cargo of a non-flooded cargo hold acting on the intact side of the transverse bulkhead which is flooded on the other side is to be taken as:

$P_{bs} = \rho_C\, g\, K_{C-f}\, (z_C - z)$ but not less than 0.

The resultant force F_{bs}, in kN, acting on a corrugation is to be taken as:

$$F_{bs} = \rho_C\, g s_C\, \frac{(z_C - h_{DB} - h_{LS})^2}{2} K_{C-f}$$

3.1.7 Resultant pressures and forces on vertically corrugated transverse bulkheads of flooded cargo holds

The resultant pressure P_R, in kN/m^2, at each point of the bulkhead, and the resultant force F_R, in kN, acting on a corrugation, given in Table 7, are to be considered for the assessment in flooded conditions of vertically corrugated transverse bulkhead structures, where:

$P_{bf\text{-}s}$: Pressure in the flooded cargo holds, in kN/m^2, as defined in [3.1.5].

P_{bs} : Pressure in the non-flooded cargo holds, in kN/m^2, as defined in [3.1.6].

$F_{bf\text{-}s}$: Force acting on a corrugation in the flooded cargo holds, in kN, as defined in [3.1.5].

F_{bs} : Force acting on a corrugation in the non-flooded cargo holds, in kN, as defined in [3.1.6].

Table 7 : Resultant pressure P_R and resultant force F_R on vertically corrugated transverse bulkhead in flooded condition

Loading condition	Resultant pressure P_R, in kN/m²	Resultant force F_R, in kN	Application
Homogeneous	$P_R = P_{bf\text{-}s} - 0.8\ P_{bs}$	$F_R = F_{bf\text{-}s} - 0.8\ F_{bs}$	All bulk carriers
Alternate	$P_R = P_{bf\text{-}s}$	$F_R = F_{bf\text{-}s}$	BC-A bulk carriers

3.2 Double bottom in cargo hold region of bulk carrier in flooded conditions

3.2.1 Application

Each cargo hold is to be considered individually flooded.

3.2.2 General

The loads to be considered as acting on the double bottom are those given by the external sea pressures and the combination of the cargo loads with those induced by the flooding of the hold to which the double bottom belongs.

The most severe combinations of cargo induced loads and flooded loads are to be used, depending on the loading conditions included in the loading manual:

- Homogeneous loading conditions.
- Non-homogeneous loading conditions.
- Packed cargo conditions (such as in the case of steel mill products).

For each loading condition, the maximum dry bulk cargo density to be carried is to be considered in calculating the allowable hold loading.

3.2.3 Flooded level

The flooded level z_F is the distance, in m, measured vertically from the baseline with the ship in the upright position, and obtained from Table 8.

Table 8 : Flooded level z_F, for double bottom in cargo hold region of bulk carrier

Bulk carrier type	Cargo hold	
	Foremost	Others
Bulk carriers less than 50,000 t deadweight with Type-B freeboard	$z_F = 0.95\ D_1$	$z_F = 0.85\ D_1$
Other bulk carriers	$z_F = D_1$	$z_F = 0.9\ D_1$

4 STEEL COIL LOADS IN CARGO HOLDS OF BULK CARRIERS

4.1 General

4.1.1 Application

The provision is determined by assuming Figure 8 as the standard means of securing steel coils loaded on wooden dunnage.

It is assumed that all the steel coils have the same characteristics.

In cases where steel coils are lined up in two or more tiers, formulae in [4.1.3] and [4.2] can be applied assuming that only the lowest tier of steel coils is in contact with hopper sloping plate or inner side plate. In other cases, scantling requirements are to be determined on a case-by-case basis.

Figure 8 : Inner bottom loaded by steel coils

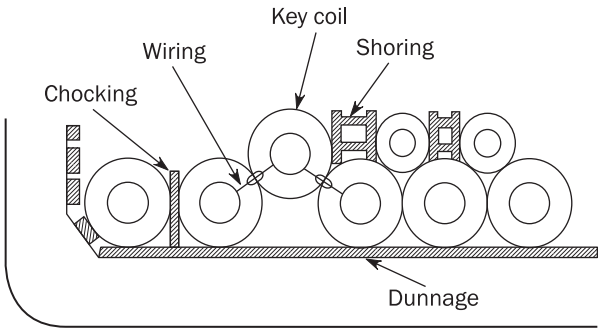

4.1.2 Arrangement of steel coils on inner bottom

The two following arrangements of steel coils on the inner bottom are considered:

- The steel coils are positioned without respect to the location of the inner bottom floors, as shown in Figure 9.
- The steel coils are positioned with respect to the location of the inner bottom floors, as shown in Figure 10.

Figure 9 : Steel coils loaded independently of inner bottom floors locations

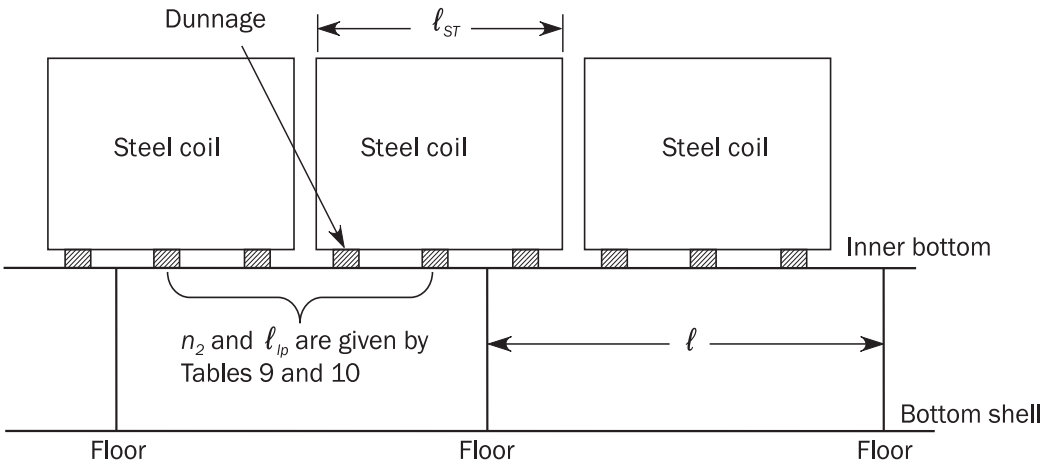

Figure 10 : Steel coils loaded between inner bottom floors

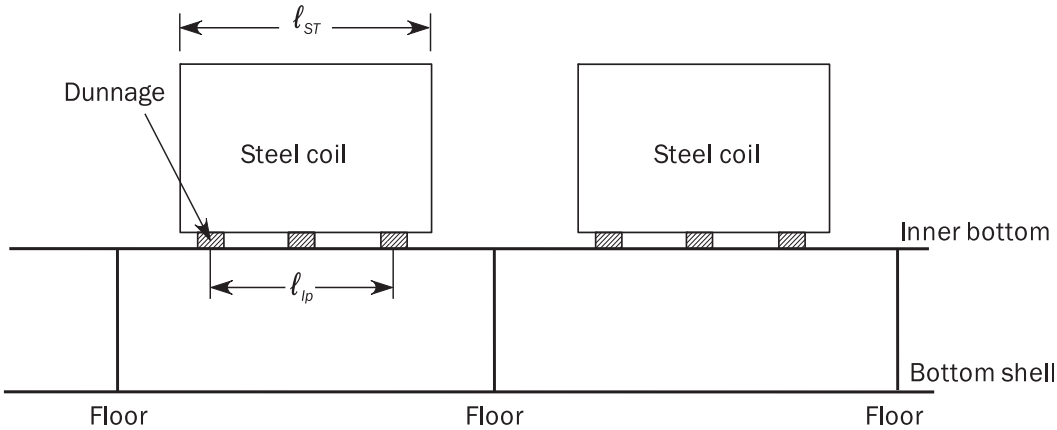

4.1.3 Arrangement of steel coils independently of the floor locations

For steel coils loaded without respect to the location of floors in the inner bottom, see Figure 9:

The number n_2 of load point dunnages per elementary plate panels is to be found in comply with Table 9.

The distance ℓ_{lp}, in m, between outermost load point dunnages per elementary plate panel is to be found in comply with Table 10.

Table 9 : Number n_2 of load point dunnages per elementary plate panel

n_2	n_3			
	2	3	4	5
1	$0 < \frac{\ell}{\ell_{st}} \le 0.5$	$0 < \frac{\ell}{\ell_{st}} \le 0.33$	$0 < \frac{\ell}{\ell_{st}} \le 0.25$	$0 < \frac{\ell}{\ell_{st}} \le 0.2$
2	$0.5 < \frac{\ell}{\ell_{st}} \le 1.2$	$0.33 < \frac{\ell}{\ell_{st}} \le 0.67$	$0.25 < \frac{\ell}{\ell_{st}} \le 0.5$	$0.2 < \frac{\ell}{\ell_{st}} \le 0.4$
3	$1.2 < \frac{\ell}{\ell_{st}} \le 1.7$	$0.67 < \frac{\ell}{\ell_{st}} \le 1.2$	$0.5 < \frac{\ell}{\ell_{st}} \le 0.75$	$0.4 < \frac{\ell}{\ell_{st}} \le 0.6$
4	$1.7 < \frac{\ell}{\ell_{st}} \le 2.4$	$1.2 < \frac{\ell}{\ell_{st}} \le 1.53$	$0.75 < \frac{\ell}{\ell_{st}} \le 1.2$	$0.6 < \frac{\ell}{\ell_{st}} \le 0.8$
5	$2.4 < \frac{\ell}{\ell_{st}} \le 2.9$	$1.53 < \frac{\ell}{\ell_{st}} \le 1.87$	$1.2 < \frac{\ell}{\ell_{st}} \le 1.45$	$0.8 < \frac{\ell}{\ell_{st}} \le 1.2$
6	$2.9 < \frac{\ell}{\ell_{st}} \le 3.6$	$1.87 < \frac{\ell}{\ell_{st}} \le 2.4$	$1.45 < \frac{\ell}{\ell_{st}} \le 1.7$	$1.2 < \frac{\ell}{\ell_{st}} \le 1.4$
7	$3.6 < \frac{\ell}{\ell_{st}} \le 4.1$	$2.4 < \frac{\ell}{\ell_{st}} \le 2.73$	$1.7 < \frac{\ell}{\ell_{st}} \le 1.95$	$1.4 < \frac{\ell}{\ell_{st}} \le 1.6$
8	$4.1 < \frac{\ell}{\ell_{st}} \le 4.8$	$2.73 < \frac{\ell}{\ell_{st}} \le 3.07$	$1.95 < \frac{\ell}{\ell_{st}} \le 2.4$	$1.6 < \frac{\ell}{\ell_{st}} \le 1.8$
9	$4.8 < \frac{\ell}{\ell_{st}} \le 5.3$	$3.07 < \frac{\ell}{\ell_{st}} \le 3.6$	$2.4 < \frac{\ell}{\ell_{st}} \le 2.65$	$1.8 < \frac{\ell}{\ell_{st}} \le 2.0$
10	$5.3 < \frac{\ell}{\ell_{st}} \le 6.0$	$3.6 < \frac{\ell}{\ell_{st}} \le 3.93$	$2.65 < \frac{\ell}{\ell_{st}} \le 2.9$	$2.0 < \frac{\ell}{\ell_{st}} \le 2.4$

Table 10 : Distance between outermost load point dunnages per elementary plate panel, ℓ_{lp}, in m

n_2	n_3			
	2	3	4	5
1	Actual breadth of dunnages			
2	$0.5\ell_{st}$	$0.33\ell_{st}$	$0.25\ell_{st}$	$0.2\ell_{st}$
3	$1.2\ell_{st}$	$0.67\ell_{st}$	$0.50\ell_{st}$	$0.4\ell_{st}$
4	$1.7\ell_{st}$	$1.20\ell_{st}$	$0.75\ell_{st}$	$0.6\ell_{st}$
5	$2.4\ell_{st}$	$1.53\ell_{st}$	$1.20\ell_{st}$	$0.8\ell_{st}$
6	$2.9\ell_{st}$	$1.87\ell_{st}$	$1.45\ell_{st}$	$1.2\ell_{st}$
7	$3.6\ell_{st}$	$2.40\ell_{st}$	$1.70\ell_{st}$	$1.4\ell_{st}$
8	$4.1\ell_{st}$	$2.73\ell_{st}$	$1.95\ell_{st}$	$1.6\ell_{st}$
9	$4.8\ell_{st}$	$3.07\ell_{st}$	$2.40\ell_{st}$	$1.8\ell_{st}$
10	$5.3\ell_{st}$	$3.60\ell_{st}$	$2.65\ell_{st}$	$2.0\ell_{st}$

4.1.4 Arrangement of steel coils between floors

For steel coils loaded with respect to the locations of floors in the inner bottom, see Figure 10:

- The number n_2 of load point dunnages per elementary plate panels is to be taken as: $n_2 = n_3$
- The distance ℓ_{lp} between outermost load point dunnages per elementary plate panel is to be taken as the distance between the outermost dunnage supporting one row of steel coils.

4.1.5 Centre of gravity of steel coil cargo

The centre of gravity of the steel coil cargo of the considered cargo hold is to be taken at the following position:

a) Longitudinal position

x_{Gsc} is the X coordinate, in m, of the volumetric centre of gravity of the considered cargo hold with respect to the reference coordinate system defined in Ch 4, Sec 1, [1.2.1].

b) Transverse position

$$y_{Gsc} = \varepsilon \frac{B_H}{4}$$

c) Vertical position

$$z_{Gsc} = h_{DB} + \left[1 + (n_1 - 1)\frac{\sqrt{3}}{2}\right]\frac{d_{sc}}{2}$$

where:

ε : Coefficient to be taken as:

ε = 1.0 when a port side structural member is assessed.

ε = -1.0 when a starboard side structural member is assessed.

4.2 Total loads

4.2.1 Total load on the inner bottom

The total load $F_{sc\text{-}ib}$, in kN, due to steel coil cargoes on the inner bottom is to be taken as:

$$F_{sc-ib} = \cos(C_{XG}\ \varphi)\ \cos(C_{YG}\ \theta)\ F_{sc-ib-s} + F_{sc-ib-d} \text{ but not less than 0}$$

where:

$F_{sc\text{-}ib\text{-}s}$: Static load, in kN, on the inner bottom, given in [4.3.1].

$F_{sc\text{-}ib\text{-}d}$: Dynamic load, in kN, on the inner bottom, given in [4.4.2].

C_{XG}, C_{YG} : Load combination factors, as defined in Ch 4, Sec 2, [2.2].

4.2.2 Total load on the hopper side

The total load $F_{sc\text{-}hs}$, in kN, due to steel coil cargoes on the hopper side is to be taken as:

$$F_{sc-hs} = \frac{\cos(\theta_h + \varepsilon\ C_{YG}\ \theta)\ \cos(C_{XG}\ \varphi)}{\cos\theta_h} F_{sc-hs-s} + F_{sc-hs-d} \text{ but not less than 0}$$

where:

$F_{sc\text{-}hs\text{-}s}$: Static load, in kN, on the hopper side, given in [4.3.2].

$F_{sc\text{-}hs\text{-}d}$: Dynamic load, in kN, on the hopper, given in [4.4.3].

C_{XG}, C_{YG} : Load combination factors, as defined in Ch 4, Sec 2, [2.2].

4.3 Static loads

4.3.1 Static loads on the inner bottom

The static load $F_{sc\text{-}ib\text{-}s}$, in kN, on the inner bottom due to steel coils is to be taken as:

$$F_{sc-ib-s} = M_{sc-ib} g$$

where:

$M_{sc\text{-}ib}$: Equivalent mass of steel coils, in t, to be taken as:

$$M_{sc-ib} = K_S W \frac{n_1 n_2}{n_3} \quad \text{for} \quad n_2 \le 10 \quad \text{and} \quad n_3 \le 5$$

$$M_{sc-ib} = K_S W n_1 \frac{\ell}{\ell_{st}} \quad \text{for} \quad n_2 > 10 \quad \text{or} \quad n_3 > 5$$

K_S : Coefficient to be taken as:

K_S = 1.4 when steel coils are lined up in one tier with a key coil.

K_S= 1.0 in other cases.

4.3.2 Static load on the hopper side

The static load $F_{sc\text{-}hs\text{-}s}$, in kN, on the hopper side due to steel coils is to be taken as:

$$F_{sc-hs-s} = \cos\theta_h M_{sc-hs} \cdot g$$

where:

$M_{sc\text{-}hs}$: Equivalent mass of steel coils, in t, to be taken as:

$$M_{sc-hs} = C_k W \frac{n_2}{n_3} \quad \text{for} \quad n_2 \le 10 \quad \text{and} \quad n_3 \le 5$$

$$M_{sc-hs} = C_k W \frac{\ell}{\ell_{st}} \quad \text{for} \quad n_2 > 10 \quad \text{or} \quad n_3 > 5$$

C_k : Coefficient to be taken as:

C_k = 3.2 when steel coils are lined up two or more tiers, or when steel coils are lined up one tier and key coil is located second or 3rd from hopper sloping plate or inner hull plate.

C_k = 2.0 for other cases.

4.4 Dynamic loads

4.4.1 Tangential roll acceleration

The tangential roll acceleration a_R, in m/s^2, is to be taken as:

$$a_R = \theta \frac{\pi}{180} \left(\frac{2\pi}{T_\theta}\right)^2 \sqrt{y_{Gsc}^2 + (R - z_{Gsc})^2}$$

where:

y_{Gsc} : Y coordinate, in m, of the centre of gravity of the steel coil cargo of the considered cargo hold, given in [4.1.5].

z_{Gsc} : Z coordinate, in m, of the centre of gravity of the steel coil cargo of the considered cargo hold, given in [4.1.5].

4.4.2 Dynamic load on the inner bottom

The dynamic load $F_{sc\text{-}ib\text{-}d}$, in kN, on the inner bottom due to steel coils is to be taken as:

$$F_{sc-ib-d} = M_{sc-ib}\, a_z$$

where:

a_z : Vertical acceleration, in m/s^2, as defined in Ch 4, Sec 3, [3.2.4], calculated at the centre of gravity of the steel coil cargo of the considered cargo hold, given in [4.1.5].

4.4.3 Dynamic load on the hopper side

The dynamic load $F_{sc\text{-}hs\text{-}d}$, in kN, on the hopper side due to steel coils is to be taken as:

$$F_{sc-hs-d} = \varepsilon M_{sc-hs}\left[C_{YR}\, a_R \sin\left(\tan^{-1}\left|\frac{y_{Gsc}}{R - z_{Gsc}}\right| - \theta_h\right) - C_{YS}\, a_{sway} \sin\theta_h\right]$$

where:

C_{YS}, C_{YR} : Load combination factors, defined in Ch 4, Sec 2, [2.2].

a_{sway} : Sway acceleration, in m/s^2, as defined in Ch 4, Sec 3, [2.2.2].

a_R : Tangential acceleration, in m/s^2, as defined in [4.4.1].

y_{Gsc} : Y coordinate, in m, of the centre of gravity of the steel coil cargo of the considered cargo hold, given in [4.1.5].

z_{Gsc} : Z coordinate, in m, of the centre of gravity of the steel coil cargo of the considered cargo hold, given in [4.1.5].

5 LOADS ON NON-EXPOSED DECKS AND PLATFORMS

5.1 Application

5.1.1 General

The loads defined in [5.2] and [5.3] are applicable to non-exposed decks, accommodation decks and platforms.

5.2 Pressure due to distributed load

5.2.1

If a distributed load is carried on a deck, the static and dynamic pressures due to this distributed load are to be considered.

The static distributed load is to be defined by the designer without being less than 3 kN/m^2 for accommodation decks and 10 kN/m^2 for other decks and platforms.

The pressure P_{dl}, in kN/m^2, due to this distributed load for the static (S) design load scenarios, given in Ch 4, Sec 7, is to be taken as:

$$P_{dl} = P_{dl-s}$$

The pressure P_{dl}, in kN/m^2, due to this distributed load for the static plus dynamic (S+D) design load scenarios, is to be derived for the envelope of dynamic load cases and is to be taken as:

$$P_{dl} = P_{dl-s} + P_{dl-d} \quad \text{but not less than 0.}$$

where:

$P_{dl\text{-}s}$: Static pressure, in kN/m^2, due to the distributed load.

$P_{dl\text{-}d}$: Dynamic pressure, in kN/m^2, due to the distributed load, in kN/m^2, to be taken as:

$$P_{dl-d} = f_\beta \frac{a_{Z-env}}{g} P_{dl-s}$$

$a_{z\text{-}env}$: Envelope of vertical acceleration, in m/s^2, at the load position being considered, for the dynamic load cases, given in Ch 4, Sec 3, [3.3.3].

5.3 Concentrated force due to unit load

5.3.1

If a unit load is carried on an internal deck, the static and dynamic forces due to the unit load carried are to be considered when a direct analysis is applied for stiffeners or primary supporting members such as in Pt 1, Ch 6, Sec 5, [1.2] or Pt 1, Ch 6, Sec 6, [3.3] respectively.

The force F_U, in kN, due to this concentrated load for the static (S) design load scenarios, given in Ch 4, Sec 7, is to be taken as:

$$F_U = F_{U-s}$$

The force F_U, in kN, due to this concentrated load for the static plus dynamic (S+D) design load scenarios, is to be derived for the envelope of dynamic load cases and is to be taken as:

$F_U = F_{U-s} + F_{U-d}$ but not less than 0.

where:

$F_{U\text{-}s}$: Static force, in kN, due to the unit load to be taken as:

$$F_{U-s} = m_U g$$

$F_{U\text{-}d}$: Dynamic force, in kN, due to unit load to be taken as:

$$F_{U-d} = m_U f_\beta a_{z-env}$$

m_U : Mass of the unit load carried, in t.

$a_{z\text{-}env}$: Envelope of vertical acceleration, in m/s^2, at the centre of gravity of the unit load carried for the dynamic load cases, given in Ch 4, Sec 3, [3.3.3].

6 SLOSHING PRESSURES IN TANKS

6.1 General

6.1.1 Application

This article applies to all liquid cargo, ballast tanks and other tanks with volume exceeding 100 m^3, but does not apply to the water ballast cargo hold of bulk carriers.

6.1.2

The sloshing pressures defined in this article do not include the effect of impact pressures due to high velocity impacts with tank boundaries or internal structures. For tanks with a maximum effective sloshing breadth, b_{slh}, see [6.4.2], greater than 0.56 B or a maximum effective sloshing length, ℓ_{slh}, see [6.3.2], greater than 0.13 L at any filling level from 0.05 h_{max} to 0.95 h_{max}, see [6.3.3], a separate impact assessment is to be carried out in accordance with the Society procedures.

6.1.3 Sloshing pressure on tank boundaries and internal divisions

The sloshing pressure due to liquid motions in a tank P_{slh} acting on any load point of a tank boundary or internal divisions, in kN/m^2, for the sloshing design load scenario, given in Ch 4, Sec 7, is to be taken as follows, without being less than $P_{slh-min}$, as given in [6.2]:

- $P_{slh} = P_{slh-lng}$ for transverse bulkheads, as defined in [6.3.3].
- $P_{slh} = P_{slh-wf}$ for web frames and transverse stringers, as defined in [6.3.4].
- $P_{slh} = P_{slh-t}$ for longitudinal bulkheads, as defined in [6.4.3].
- $P_{slh} = P_{slh-grd}$ for longitudinal girders and stringers, see [6.4.4].

6.2 Minimum sloshing pressure

6.2.1

The minimum sloshing pressure, $P_{slh-min}$, for tanks of cellular construction, i.e. double hull construction with internal structures restricting the fluid motion, is to be taken as 12 kN/m^2.

The minimum sloshing pressure, $P_{slh-min}$, for cargo and all other tanks is to be taken as 20 kN/m^2.

6.3 Sloshing pressure due to longitudinal liquid motion

6.3.1 Application

The sloshing pressure due to longitudinal liquid motion, $P_{slh-lng}$, is to be taken as a constant value over the full tank depth and is to be taken as the greater of the sloshing pressures calculated for filling levels from 0.05 h_{max} to 0.95 h_{max}, in 0.05 h_{max} increments.

6.3.2 Effective sloshing length

The effective sloshing length, ℓ_{slh}, in m, is to be taken as defined in Table 11.

Table 11 : Effective sloshing length ℓ_{slh}

Type of transverse bulkhead	ℓ_{slh}
Transverse tight bulkheads	$\ell_{slh} = \dfrac{(1 + n_{WT}\ \alpha_{WT})\ (1 + f_{wf}\ \alpha_{wf})\ell_{tk-h}}{(1 + n_{WT})\ (1 + f_{wf})}$
Transverse wash bulkheads	$\ell_{slh} = \dfrac{[1 + (n_{WT} - 1)\ \alpha_{WT}]\ (1 + f_{wf}\ \alpha_{wf})\ell_{tk-h}}{(1 + n_{WT})\ (1 + f_{wf})}$

where:

n_{WT} : Number of transverse wash bulkheads in the tank.

α_{WT} : Transverse wash bulkhead coefficient, to be taken as (see Figure 11):

$$\alpha_{WT} = \frac{A_{OWT}}{A_{tk-t-h}}$$

α_{wf} : Transverse web frame coefficient, to be taken as (see Figure 12):

$$\alpha_{wf} = \frac{A_{O-wf-h}}{A_{tk-t-h}}$$

For tanks with changing shape along the length and/or with web frames of different shape the transverse web frame coefficient, α_{wf}, may be taken as the weighted average of all web frame locations in the tank given as:

$$\alpha_{wf} = \frac{\sum_{i=1}^{n_{wf}} \frac{A_{O-wf-h_i}}{A_{tk-t-h_i}}}{n_{wf}}$$

A_{OWT} : Total area of openings, in m^2, in the transverse section in way of the wash bulkhead below the considered filling height.

A_{tk-t-h} : Total transverse cross sectional area, in m^2, of the tank below the considered filling height.

A_{O-wf-h} : Total area of openings, in m^2, in the transverse section in way of the web frame below the considered filling height.

f_{wf} : Factor to account for number of transverse web frames and transverse wash bulkheads in the tank, to be taken as:

$$f_{wf} = \frac{n_{wf}}{1 + n_{WT}}$$

n_{wf} : Number of transverse web frames, excluding wash bulkheads, in the tank.

ℓ_{tk-h} : Length of cargo tank, in m, at considered filling height.

Figure 11 : Transverse wash bulkhead coefficient

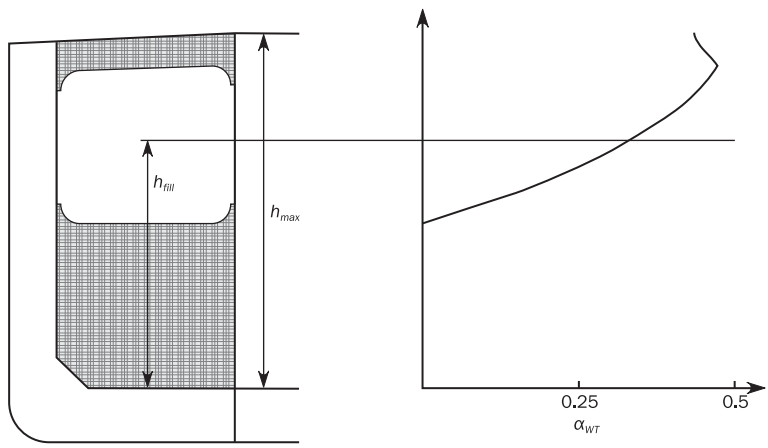

Figure 12 : Transverse web frame coefficient

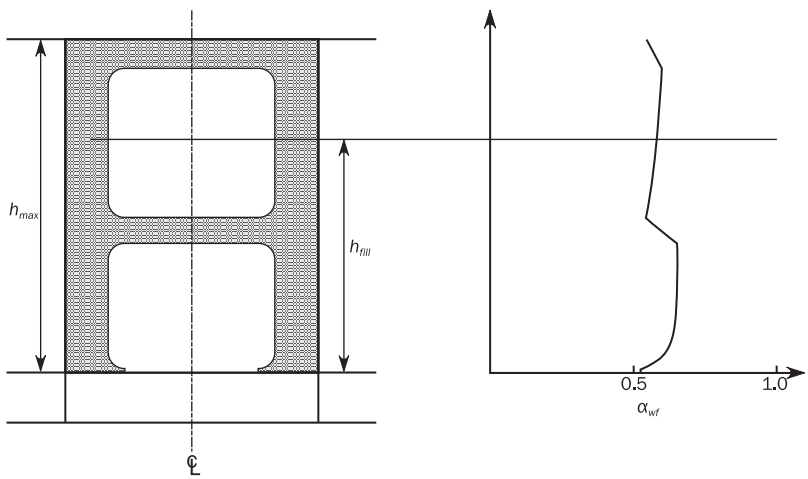

6.3.3 Sloshing pressure in way of transverse bulkheads

The sloshing pressure in way of transverse bulkheads including wash bulkheads due to longitudinal liquid motion, $P_{slh\text{-}lng}$, in kN/m^2, for a particular filling level, is to be taken as:

$$P_{slh-\text{lng}} = \rho_{slh}\, g \ell_{slh}\, f_{slh} \left[0.4 - \left(0.39 - \frac{1.7\ \ell_{slh}}{L}\right) \frac{L}{350}\right]$$

where:

ℓ_{slh} : Effective sloshing length, in m, as defined in [6.3.2].

f_{slh} : Coefficient taken as:

$$f_{slh} = 1 - 2\left(0.7 - \frac{h_{fill}}{h_{max}}\right)^2$$

h_{fill} : Filling height, measured from tank bottom, in m, see Figure 11.

6.3.4 Sloshing pressure on internal web frames or transverse stringers adjacent to a transverse bulkhead

For tanks with internal web frames the sloshing pressure acting on a web frame or transverse stringer adjacent to transverse bulkheads or transverse wash bulkheads due to longitudinal liquid motion, $P_{slh\text{-}wf}$, in kN/m^2, provided it is located within 0.25 ℓ_{slh} from the bulkhead, is to be taken as:

$$P_{slh-wf} = P_{slh-\text{lng}} \left(1 - \frac{s_{wf}}{\ell_{slh}}\right)^2$$

where:

ℓ_{slh} : Effective sloshing length, in m, as defined in [6.3.2].

$P_{slh\text{-}lng}$: Sloshing pressure due to longitudinal liquid motion acting on transverse bulkhead, as defined in [6.3.3].

s_{wf} : Distance from transverse bulkhead to web frame under consideration, in m.

The distribution of pressure across web frames and transverse stringers is given in Figure 13.

Figure 13 : Sloshing pressure distribution on transverse stringers and web frames

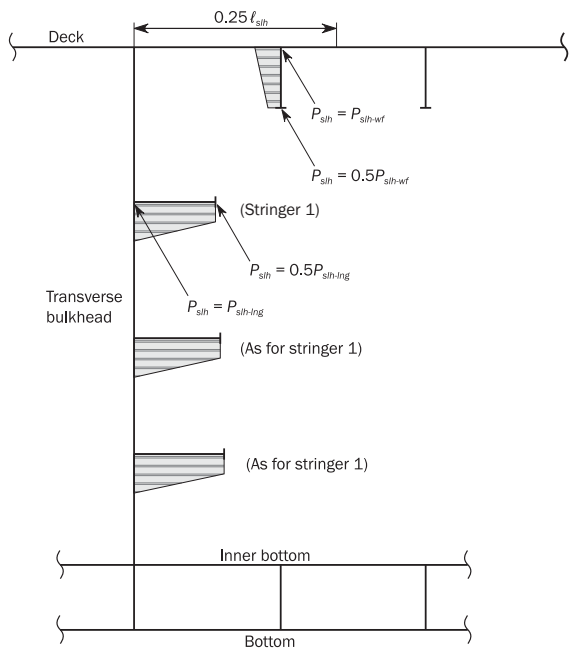

6.4 Sloshing pressure due to transverse liquid motion

6.4.1 Application

The sloshing pressure due to transverse liquid motion, $P_{slh\text{-}t}$, is to be taken constant as a constant value over the full tank depth and is to be taken as the greater of the sloshing pressures calculated for filling levels from 0.05 h_{max} to 0.95 h_{max}, in 0.05 h_{max} increments.

6.4.2 Effective sloshing breadth

The effective sloshing breadth, b_{slh}, in m, is to be taken as in Table 12, but not less than 0.3*B*.

Table 12 : Effective sloshing breadth b_{slh}

Type of longitudinal bulkhead	b_{slh}
Longitudinal tight bulkheads	$b_{slh} = \dfrac{(1 + n_{WL}\ \alpha_{WL})\ (1 + f_{grd}\ \alpha_{grd})\ b_{tk-h}}{(1 + n_{WL})\ (1 + f_{grd})}$
Longitudinal wash bulkheads	$b_{slh} = \dfrac{[1 + (n_{WL} - 1)\ \alpha_{WL}]\ (1 + f_{grd}\ \alpha_{grd})\ b_{tk-h}}{(1 + n_{WL})\ (1 + f_{grd})}$

where:

n_{WL} : Number of longitudinal wash bulkheads in the tank.

α_{WL} : Longitudinal wash bulkhead coefficient:

$$\alpha_{WL} = \frac{A_{OWL}}{A_{tk-L-h}}$$

α_{grd} : Girder coefficient, to be taken as:

$$\alpha_{grd} = \frac{A_{O-grd-h}}{A_{tk-L-h}}$$

A_{OWL} : Total area of openings, in m^2, in the longitudinal section in way of the wash bulkhead below the considered filling height.

$A_{tk\text{-}L\text{-}h}$: Total longitudinal cross sectional area, in m^2, of the tank below the considered filling height.

$A_{O\text{-}grd\text{-}h}$: Total area of openings, in m^2, in the longitudinal section in way of the web frame below the considered filling height.

f_{grd} : Factor to account for number of longitudinal girders and longitudinal wash bulkheads in the tank, to be taken as:

$$f_{grd} = \frac{n_{grd}}{1 + n_{WL}}$$

n_{grd} : Number of longitudinal girders, excluding longitudinal wash bulkheads, in the tank.

$b_{tk\text{-}h}$: Breadth of cargo tank, in m, at considered filling height.

6.4.3 Sloshing pressure in way of longitudinal bulkheads

The sloshing pressure in way of longitudinal bulkheads including wash bulkheads due to transverse liquid motion, $P_{slh\text{-}t}$, in kN/m^2, for a particular filling level, is to be taken as:

$$P_{slh-t} = 7\ \rho_{slh}\ g f_{slh} \left(\frac{b_{slh}}{B} - 0.3\right)\ GM^{0.75}$$

where:

b_{slh} : Effective sloshing breadth defined in [6.4.2].

GM : Metacentric height, given in Ch 4, Sec 3, [2.1.1].

For the calculation of sloshing pressure in ballast tanks the 'ballast condition' is to be used for oil tankers and the 'normal ballast condition' for bulk carriers.

For the calculations of sloshing pressure in cargo tanks of oil tankers, the 'partial load condition' is to be used.

f_{slh} : Coefficient defined in [6.3.3].

6.4.4 Sloshing pressure on internal girders or longitudinal stringers adjacent to longitudinal bulkheads

For tanks with internal girders or stringers, the sloshing pressure acting on the girder/web frame adjacent to longitudinal bulkheads and longitudinal wash bulkhead, $P_{slh\text{-}grd}$, in kN/m^2, provided it is located within 0.25 b_{slh} from the bulkhead, is to be taken as:

$$P_{slh-grd} = P_{slh-t}\left(1 - \frac{s_{grd}}{b_{slh}}\right)^2$$

where:

b_{slh} : Effective sloshing breadth defined in [6.4.2].

$P_{slh\text{-}t}$: Sloshing pressure due to transverse liquid motion acting on longitudinal bulkhead, as defined in [6.4.3].

s_{grd} : Distance from longitudinal bulkhead to girder under consideration, in m.

The distribution of pressure across stringers is given in Figure 14. The distribution of pressure across longitudinal girders is similar to the deck web frame shown in Figure 13.

Figure 14 : Sloshing pressure distribution on longitudinal stringers and girders

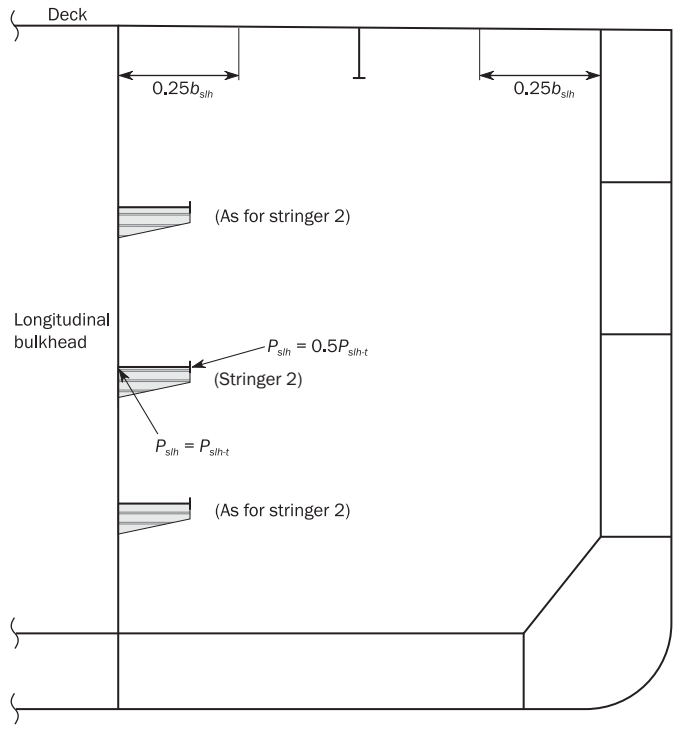

7 DESIGN PRESSURE FOR TANK TESTING

7.1 Definition

7.1.1

The actual strength testing is to be carried out in accordance with Ch 1, Sec 2, [3.8.4]. In order to assess the structure, static design pressures are to be applied.

The design pressure for tank testing, P_{ST}, in kN/m^2, is to be taken as:

$$P_{ST} = 10\ (z_{ST} - z)$$

where:

z_{ST} : Design testing load height, in m, as defined in Table 13.

Table 13 : Design testing load height z_{ST}

Compartment	z_{ST}
Double bottom tanks (1)	The greater of the following: $z_{ST} = z_{top} + h_{air}$ $z_{ST} = z_{bd}$
Hopper side tanks, topside tanks, double side tanks, fore and aft peaks used as tank	The greater of the following: $z_{ST} = z_{top} + h_{air}$ $z_{ST} = z_{top} + 2.4$
Tank bulkheads, deep tanks, fuel oil bunkers	The greater of the following: $z_{ST} = z_{top} + h_{air}$ $z_{ST} = z_{top} + 2.4$ $z_{ST} = z_{top} + 0.1\ P_{PV}$
Ballast hold	$z_{ST} = z_h + 0.9$
Chain locker (if aft of collision bulkhead)	$z_{ST} = z_C$
Independent tanks	The greater of the following: $z_{ST} = z_{top} + h_{air}$ $z_{ST} = z_{top} + 0.9$
Ballast ducts	Testing load height corresponding to ballast pump maximum pressure

where:

z_{bd} : Z coordinate, in m, of the bulkhead deck.

z_h : Z coordinate, in m, of the top of hatch coaming.

z_C : Z coordinate, in m, of the top of the chain pipe.

(1) For double bottom tanks connected with hopper side tanks, topside tanks or double side tanks, z_{ST} corresponding to "Hopper side tanks, topside tanks, double side tanks, fore and aft peaks used as tank, cofferdams" is applicable.

SECTION 7
DESIGN LOAD SCENARIOS

SYMBOLS

For symbols not defined in this section, refer to Ch 1, Sec 4.

VBM : Design vertical bending moment, in kNm.

M_{sw} : Permissible hull girder hogging and sagging still water bending moment for seagoing operation, in kNm, as defined in Ch 4, Sec 4, [2.2.2].

$M_{sw\text{-}p}$: Permissible hull girder hogging and sagging still water bending moment for harbour/sheltered water operation, in kNm, as defined in Ch 4, Sec 4, [2.2.3].

$M_{sw\text{-}f}$: Permissible hull girder hogging or sagging still water bending moment $M_{sw\text{-}f}$ for seagoing operation in the flooded condition, in kNm, as defined in Ch 4, Sec 4, [2.2.4].

$M_{wv\text{-}LC}$: Vertical wave bending moment for a considered dynamic load case, in kNm, as defined in Ch 4, Sec 4, [3.5.2].

HBM : Design horizontal bending moment, in kNm.

$M_{wh\text{-}LC}$: Horizontal wave bending moment for a considered dynamic load case, in kNm, as defined in Ch 4, Sec 4, [3.5.4].

TM : Design torsional moment, in kNm.

$M_{wt\text{-}LC}$: Wave torsional moment for a considered dynamic load case, in kNm, as defined in Ch 4, Sec 4, [3.5.5].

VSF : Design vertical shear force, in kN.

Q_{sw} : Permissible hull girder positive and negative still water shear force limits for seagoing operation, in kN, as defined in Ch 4, Sec 4, [2.3.1] or Ch 4, Sec 4, [2.3.3].

$Q_{sw\text{-}p}$: Permissible hull girder positive and negative still water shear force limits for harbour/sheltered water operation, in kN, as defined in Ch 4, Sec 4, [2.3.2] or Ch 4, Sec 4, [2.3.4].

$Q_{sw\text{-}f}$: Permissible hull girder positive and negative still water shear force for seagoing operation in the flooded condition, in kN, as defined in Ch 4, Sec 4, [2.3.5].

$Q_{wv\text{-}LC}$: Vertical wave shear force for a considered dynamic load case, in kN, as defined in Ch 4, Sec 4, [3.5.3].

P_{ex} : Design external pressure, in kN/m^2.

P_S : Static sea pressure at considered draught, in kN/m^2, as defined in Ch 4, Sec 5, [1.2.1].

P_W : Dynamic pressure for a considered dynamic load case, in kN/m^2, as defined in Ch 4, Sec 5, [1.3.2] to Ch 4, Sec 5, [1.3.8].

P_D : Green sea load for a considered dynamic load case, in kN/m^2, as defined in Ch 4, Sec 5, [2.2.3] and Ch 4, Sec 5, [2.2.4].

P_{in} : Design internal pressure, in kN/m^2.

P_{ST} : Tank testing pressure, in kN/m^2, see Ch 4, Sec 6, [7.1.1].

P_{ls} : Static liquid pressure in tank, in kN/m^2, as defined in Ch 4, Sec 6, [1.2].

P_{ld} : Dynamic liquid pressure in tank for a considered dynamic load case, in kN/m^2, as defined in Ch 4, Sec 6, [1.3].

P_{bs} : Dry bulk cargo static pressure, in kN/m^2, as defined in Ch 4, Sec 6, [2.5.2].

P_{bd} : Dry bulk cargo dynamic pressure for a considered dynamic load case, in kN/m^2, as defined in Ch 4, Sec 6, [2.5.3].

P_{fs} : Static pressure in compartments and tanks in flooded condition, in kN/m^2, as defined in Ch 4, Sec 6, [1.4.1].

P_{fd} : Dynamic pressure in compartments and tanks in flooded condition, in kN/m^2, as defined in Ch 4, Sec 6, [1.5.1]

$P_{dl\text{-}s}$: Static pressure on non-exposed decks and platforms, in kN/m^2, as defined in Ch 4, Sec 6, [5.2.1].

$P_{dl\text{-}d}$: Dynamic pressure on non-exposed decks and platforms for a considered dynamic load case, in kN/m^2, as defined in Ch 4, Sec 6, [5.2.1]

$F_{U\text{-}s}$: Static load acting on supporting structures and securing systems for heavy units or cargo, equipment or structural components, in kN, as defined in Ch 4, Sec 5, [2.3.2].

$F_{U\text{-}d}$: Dynamic load acting on supporting structures and securing systems for heavy units of cargo, equipment or structural components, in kN, as defined in Ch 4, Sec 5, [2.3.2].

P_{SL} : Bottom slamming pressure, in kN/m^2, as defined in Ch 4, Sec 5, [3.2].

P_{FB} : Bow impact pressure, in kN/m^2, as defined in Ch 4, Sec 5, [3.3].

P_{slh} : Sloshing pressure, in kN/m^2, as defined in Ch 4, Sec 6, [6].

1 GENERAL

1.1 Application

1.1.1

This section gives the design load scenarios that are to be used for:

- Strength assessment by prescriptive and direct analysis (Finite Element Method, FEM) methods, as given in [2].
- Fatigue assessment by prescriptive and direct analysis (FEM) methods, as given in [3].

1.1.2

For the strength assessment, the principal design load scenarios consist of either S (Static) loads or S+D (Static + Dynamic) loads. In some cases, the letter 'A' prefixes the S or S+D to denote that this is an accidental design load scenario. There are some additional design load scenarios to be considered which relate to impact (I) loads, sloshing (SL) loads and fatigue (F) load.

2 DESIGN LOAD SCENARIOS FOR STRENGTH ASSESSMENT

2.1 Principal design load scenarios

2.1.1

The principal design load scenarios are given in Table 1.

Table 1 : Principal design load scenarios

Design load scenario			Harbour and sheltered water and testing	Seagoing conditions with extreme sea loads	Ballast water exchange (4)	Accidental flooded conditions (4)	
Load components			Static (S)	Static + Dynamic (S+D)	Static + dynamic (S+D)	Static (A: S)	Static + dynamic (A: S+D)
Hull Girder		VBM	M_{sw-p}	$M_{sw} + M_{wv-LC}$	$M_{sw} + M_{wv-LC}$	M_{sw-f} (2)	$M_{sw-f} + M_{wv-LC}$ (3)
		HBM	-	M_{wh-LC}	M_{wh-LC}	-	M_{wh-LC} (3)
		VSF	Q_{sw-p}	$Q_{sw} + Q_{wv-LC}$	$Q_{sw} + Q_{wv-LC}$	-	$Q_{sw-f} + Q_{wv-LC}$ (3)
		TM	-	M_{wt-LC}	M_{wt-LC}	-	-
Local Loads	P_{ex}	External deck for green sea	-	P_D	-	-	-
		Hull envelope	P_S	$P_S + P_W$	$P_S + P_W$	-	-
	P_{in}	Ballast tanks (1)	$Max\ (P_{ls}, P_{ST})$	$P_{ls} + P_{ld}$	$P_{ls} + P_{ld}$	-	-
		Liquid cargo tanks			-	-	
		Other tanks			-	-	
		Watertight boundaries	-	-	-	P_{fs}	$P_{fs} + P_{fd}$
		Cargo holds	P_{bs}	$P_{bs} + P_{bd}$	-		
	P_{dk}	Internal decks for dry spaces	P_{dl-s}	$P_{dl-s} + P_{dl-d}$	-	-	-
		External deck for distributed loads	P_{dl-s}	$P_{dl-s} + P_{dl-d}$	-	-	-
		External deck for heavy units	F_{U-s}	$F_{U-s} + F_{U-d}$	-	-	-

(1) WB cargo hold is considered as ballast tank except for design load scenario 'ballast water exchange'.
(2) M_{swf} used for hull local scantling of watertight bulkhead
(3) Hull girder strength check is performed according to Ch 5, Sec 1 for bulk carriers having a length *L* of 150 m or above
(4) Applicable to prescriptive assessment only

2.2 Additional design load scenarios

2.2.1

The design load scenarios to be considered for sloshing, bottom slamming and bow impact are given in Table 2.

Table 2 : Design load scenarios for impact and sloshing conditions

Design load scenario			Bow impact Impact (I)	Bottom slamming Impact (I)	Sloshing Sloshing (SL)
Load components					
Hull Girder	VBM		-	-	M_{sw}
	HBM		-	-	-
	VSF		-	-	-
	TM		-	-	-
Local Loads	P_{ex}	External deck for green sea	-	-	-
		Hull envelope	P_{FB}	P_{SL}	-
	P_{in}	Ballast tanks	-	-	P_{slh}
		Liquid cargo tanks			
		Other tanks			
		Watertight boundaries		-	-
		Cargo holds (1)	-	-	-
	P_{dk}	Internal decks for dry spaces	-	-	-
		External deck for distributed loads	-	-	-
		External deck for heavy units	-	-	-
(1) Sloshing assessment is not to be considered for water ballast cargo holds of bulk carriers.					

3 DESIGN LOAD SCENARIOS FOR FATIGUE ASSESSMENT

3.1 Design load scenarios

3.1.1

The design load scenarios for fatigue assessment are given in Table 3.

Table 3 : Design load scenarios for fatigue assessment

Design load scenario			Fatigue: Static + Dynamic (F: S+D)
Load components			
Hull Girder	VBM		$M_{sw} + M_{wv\text{-}LC}$
	HBM		$M_{wh\text{-}LC}$
	VSF		$Q_{sw} + Q_{wv\text{-}LC}$
	TM		$M_{wt\text{-}LC}$
Local Loads	P_{ex}	External deck for green sea	-
		Hull envelope	$P_S + P_W$
	P_{in}	Ballast tanks (1)	$P_{ls} + P_{ld}$
		Liquid cargo tanks	
		Other tanks designed for liquid filling	
		Watertight boundaries	-
		Cargo holds	$P_{bs} + P_{bd}$
	P_{dk}	Internal decks for dry spaces	-
		External deck for distributed loads	-
		External deck for heavy units	-
(1) WB cargo hold is considered as ballast tank except for design load scenario 'ballast water exchange'.			

SECTION 8
LOADING CONDITIONS

SYMBOLS

For symbols not defined in this section, refer to Ch 1, Sec 4.

ℓ : Distance from propeller centreline to the waterline, in m.

D_p : Propeller diameter, in m.

M_{Full} : Cargo mass, in t, as defined in Ch 4, Sec 6.

M_H : Cargo mass, in t, as defined in Ch 4, Sec 6.

M_{HD} : Cargo mass, in t, as defined in Ch 4, Sec 6.

M_{BLK} : Maximum cargo mass in cargo holds in block loading conditions, in t, as defined in Ch 4, App 1.

$C_{BM\text{-}LC}$: Coefficient taken as the percentage of permissible SWBM, defined in Table 2 to Table 9 and Table 12 to Table 21.

$C_{SF\text{-}LC}$: Coefficient taken as the percentage of permissible SWSF, defined in Table 2 to Table 9 and Table 12 to Table 21.

$x_{b\text{-}aft}$, $x_{b\text{-}fwd}$: Longitudinal position, in m, of respectively the aft and forward bulkhead of the mid-hold of the FE model.

EA : Empty hold in alternate loading condition.

FA : Full hold in alternate loading condition.

T_{H1}, T_{H2}, T_{H3}, T_{H4}: Minimum permissible draught, in m, in harbour condition as defined in Ch 4, App 1.

1 APPLICATION

1.1 Ships having a length *L* of 150m or above

1.1.1

The requirements in [2] to [5] are applicable to ships having a length *L* of 150 m or above.

1.1.2 Design loading conditions for strength assessment

Design loading conditions for strength assessment are given in [2] to [4]. The design loading conditions common to both oil tankers and bulk carriers are given in [2]. Specific design loading conditions for oil tankers and bulk carriers are given in [3] and [4] respectively.

Unless otherwise specified, each of the design seagoing conditions is to be investigated for the arrival and departure conditions.

1.1.3

These requirements are not intended to prevent conditions to be included in the loading manual for which calculations are to be submitted. It is not intended to replace in any way the required loading manual/instrument.

1.1.4

Loading conditions from the loading manual, which are not covered in [2] to [4], if any, are to be considered.

1.1.5 Standard design load conditions for fatigue assessment

The standard design loading conditions for fatigue assessment are given in [5].

1.2 Bulk carriers having a length *L* less than 150 m

1.2.1

The severest loading condition from the loading manual, midship section drawing or otherwise specified by the Designer are to be considered for the longitudinal strength given in Ch 5 and for local strength check of plating, ordinary stiffeners and primary supporting members given in Ch 6 and Pt 2, Ch 1, Sec 3 and Pt 2, Ch 1, Sec 4.

The requirements in [2] are applicable to ships having a length *L* less than 150 m.

1.3 Dynamic load cases

1.3.1 Seagoing conditions

Unless otherwise specified, each of the design seagoing conditions are to be investigated for all dynamic load cases.

1.3.2 Beam and oblique sea dynamic load cases

For FE load analysis, the beam sea and oblique sea dynamic load cases calculated for port and starboard sides are to be applied on the model to obtain the results for both model sides.

For ship with structure symmetrical about the centreline, the beam sea and oblique sea dynamic load cases calculated for portside may be applied only to the model (i.e. dynamic load cases on starboard side may be omitted) provided the results (yield and buckling) are mirrored.

2 COMMON DESIGN LOADING CONDITIONS

2.1 Definitions

2.1.1

In general, the design cargo and ballast loading conditions, based on the amount of bunker, fresh water and stores at departure and arrival, are to be considered for the still water bending moment and shear force calculations. Where the amount and disposition of consumables at any intermediate stage of the voyage are considered more severe, calculations for such intermediate conditions are to be submitted in addition to those for departure and arrival conditions. Also, where any ballasting and/or deballasting is intended during voyage, calculations of the intermediate condition just before and just after ballasting and/or deballasting are to be submitted and included in the loading manual.

2.1.2 Departure conditions

The departure conditions are to be based on bunker tanks not taken less than 95% full and other consumables taken at 100% capacity.

2.1.3 Arrival conditions

The arrival conditions are to be based on 10% of the maximum capacity of bunker, fresh water and stores.

2.2 Partially filled ballast tanks

2.2.1 Partially filled ballast tanks in ballast loading conditions

Ballast loading conditions involving partially filled peak and/or other ballast tanks in any departure, arrival or intermediate condition are not permitted to be used as design loading conditions unless:

- Longitudinal strength of hull girder given in Ch 5, Sec 1 and Ch 8, Sec 3 is to comply with loading conditions with the considered tanks full, empty and partially filled at intended level in any departure, arrival or intermediate condition.
- For bulk carriers having a length L of 150 m or above, longitudinal strength of hull girder in flooded condition given in Ch 5, Sec 1 is to comply with loading conditions with the considered tanks full, empty and partially filled at intended level in any departure, arrival or intermediate condition.

The corresponding full, empty and partially filled tank conditions are to be considered as design conditions for calculation of the still water bending moment and shear force, but these do not need to comply with propeller immersion and trim requirements as specified in [2.3.1], [3.1.1] or [4.1.1].

Where multiple tanks are intended to be partially filled, all combinations of empty, full and partially filled at intended levels for those tanks are to be investigated. These requirements are not applicable to ballast water exchange using the sequential method.

2.2.2 Partially filled ballast tanks in cargo loading conditions

In cargo loading conditions, the requirement in [2.2] applies to peak ballast tanks only.

2.3 Seagoing conditions

2.3.1

The following seagoing loading conditions are to be included, as a minimum, in the loading manual:

a) Homogeneous cargo loading condition including a condition at the scantling draught. Homogeneous loading conditions are to not include filling of ballast tanks in departure conditions.

b) Ballast condition where the ballast tanks may be full, partially full or empty. Where ballast tanks are partially full, the conditions in [2.2.1] are to be complied with. All cargo tanks/holds are to be empty including cargo tanks/holds suitable for the carriage of water ballast at sea. The propeller is to be fully immersed. The trim is to be by the stern and is not to exceed 0.015 L_{LL}.

c) Conditions covering ballast water exchange procedures, if any, with the calculations of intermediate conditions just before and just after ballasting and/or deballasting any ballast tank.

2.4 Harbour and sheltered water conditions

2.4.1

The following harbour and sheltered water conditions are to be included in the loading manual:

a) Conditions representing typical complete loading and unloading operations.

b) Docking condition afloat.

c) Propellers inspection afloat condition, in which the propeller shaft centreline is at least $D_p/4$ above the waterline in way of the propeller. Ships with podded propulsion system arrangements are to be individually considered by the Society.

2.5 Loading conditions

2.5.1 Alternative design

For structural arrangement not covered by this section, the loading conditions, including loading pattern, corresponding draught, still water bending moment and shear forces are to be agreed by the Society.

3 OIL TANKERS

3.1 Specific design loading conditions

3.1.1 Seagoing conditions

The following seagoing loading conditions are to be included, as a minimum, in the loading manual:

a) Heavy ballast condition where the ballast tanks may be full, partially full or empty. Where ballast tanks are partially full, the conditions in [2.2.1] are to be complied with. The fore peak water ballast tank is to be full, if fitted. If upper and lower fore peak tanks are fitted, the lower is required to be full and the upper tank may be full, partially full or empty. All the cargo tanks are to be empty including cargo tanks suitable for the carriage of water ballast at sea. The draught at the forward perpendicular is not to be less than that for the normal ballast condition. The propeller is to be fully immersed. The trim is to be by the stern and is not to exceed 0.015 L_{LL}.

b) Mid-voyage conditions relating to tank cleaning or other operations where these differ significantly from the ballast conditions.

c) Any specified non-uniform distribution of loading.

d) Conditions with high density cargo including the maximum design cargo density, when applicable.

e) Design ballast condition in which all segregated ballast tanks in the cargo tank region are full and all other tanks are empty including fuel oil and fresh water tanks. This design condition is for assessment of hull strength and is not intended for ship operation. This condition will also be covered by the IMO 73/78 SBT condition provided the corresponding condition in the loading manual only includes ballast in segregated ballast tanks in the cargo tank region.

3.1.2 Additional loading conditions

The following additional loading conditions are to be included in the loading manual if the ship is specifically approved and intended to be operated in such conditions:

a) Seagoing ballast conditions including water ballast carried in one or more cargo tanks which are intended for use in emergency situations as allowed by MARPOL Reg. 18.

b) Seagoing loading conditions where the net static upward load on the double bottom exceeds that given with the combination of an empty cargo tank and a mean ship's draught of 0.9 T_{SC}.

c) Seagoing loading conditions with cargo tanks less than 25% full with the combination of mean ship's draught greater than 0.9 T_{SC}.

d) Seagoing loading conditions where the net static downward load on the double bottom exceeds that given with the combination of a full cargo tank at a cargo density of 1.025 t/m^3 or greater and a mean ship's draught of 0.6 T_{SC}.

e) For ships arranged with cross ties in the centre cargo tank, seagoing loading conditions showing a non-symmetric loading pattern where the difference in filling level between corresponding port and starboard wing cargo tanks exceeds 25% of the filling height in the wing cargo tank.

3.2 Design load combinations for direct strength analysis

3.2.1

The design load combinations for FE analysis are given in Table 1 as follows:

Table 1 : Design load combination for oil tankers

	Midship cargo hold region	Outside midship cargo hold region	Foremost cargo tanks	Aftmost cargo tanks
Tankers with two oil-tight bulkheads	Table 2	Table 4	Table 6	Table 8
Tankers with one centreline oil-tight bulkhead	Table 3	Table 5	Table 7	Table 9
Note 1: **Outside midship cargo hold region means the forward or aft cargo hold region except the foremost and aftmost cargo holds**				

3.2.2

For tankers with two oil-tight longitudinal bulkheads, where the cargo tank length is less than 0.15 *L*, the draughts given in Table 2, Table 4, Table 6 and Table 8 are subject to special consideration by the Society.

3.2.3

For tankers with one centreline oil-tight longitudinal bulkhead, where the cargo tank length is less than 0.11 *L*, the draughts given in Table 3, Table 5, Table 7 and Table 9 are subject to special consideration by the Society.

3.2.4

For seagoing conditions, the dynamic load cases required to be investigated for each loading pattern are indicated in Table 2 to Table 9. Dynamic load cases are defined in Ch 4, Sec 2.

3.2.5 Ships with structure symmetrical about centreline

For ships with structure symmetrical about the centreline, the loading pattern mirrored about centreline of another pattern may be omitted provided the results (yield and buckling) are mirrored, e.g. Table 2 A7b, A12b.

3.2.6 Tankers with two oil-tight longitudinal bulkheads except with a cross tie arrangement in the wing cargo tanks

For tankers with two oil-tight longitudinal bulkheads except with a cross tie arrangement in the wing cargo tanks, loading pattern A7 in Table 2, Table 4, Table 6 and Table 8 is to be examined for the possibility that unequal filling levels in transversely paired wing cargo tanks would result in a more onerous stress response. Loading pattern A7 is required to be analysed only if such a non-symmetric seagoing loading condition is included in the ship loading manual. The actual loading pattern, draught, *GM* and k_r from the loading manual are to be used in the FE analysis. Where the *GM* and k_r are not given in the ship's loading manual, *GM* and k_r are to be determined in accordance with Ch 4, Sec 3.

If loading pattern A7 is not considered, an operational restriction describing that the difference in filling level between corresponding port and starboard wing cargo tanks is not to exceed 25% of the filling height in the wing cargo tank, is to be added in the loading manual.

Loading pattern A7 needs not be examined for tankers with a cross tie arrangement in the wing cargo tanks.

3.2.7

For tankers with two oil-tight longitudinal bulkheads, seagoing loading pattern A3 and harbour loading pattern A13, with all cargo tanks abreast empty, in Table 2, Table 4, Table 6 and Table 8 are to be analysed with a ship draught of 0.65 T_{SC} and 0.7 T_{SC} respectively. If conditions in the ship loading manual specify greater draughts for loading pattern A3 or A13, then the maximum specified draught in the ship's loading manual for the loading pattern is to be used.

3.2.8

For tankers with two oil-tight longitudinal bulkheads, seagoing loading pattern A5 and harbour loading pattern A11, with all cargo tanks abreast fully loaded, in Table 2, Table 4, Table 6 and Table 8 are to be analysed with a ship draught of 0.65 T_{SC} and 0.6 T_{SC} respectively. If conditions in the ship loading manual specify lesser

draughts for loading pattern A5 or A11, then the minimum specified draught in the ship's loading manual for the loading pattern is to be used.

3.2.9

For loading patterns A1, A2, B1, B2 and B3, with cargo tank(s) empty, in Table 2 to Table 9, a minimum ship draught of 0.9 T_{SC} is to be used in the analysis. If conditions in the ship loading manual specify greater draughts for loading patterns with empty cargo tank(s), then the maximum specified draught for the actual condition is to be used.

3.2.10 Ballast conditions

Where a ballast condition is specified in the ship loading manual with ballast water filled in one or more cargo tanks, loading patterns A8 or B7 in Table 2 or Table 3 are to be examined.

If the actual loading pattern as specified in the loading manual is different from load pattern A8 or B7 then:

a) The actual loading patterns are to be substituted for the loading pattern A8 or B7 with the following calculation conditions:
   - Draught to be taken as T_{BAL-E},
   - C_{BM-LC} = 100% (sag.),
   - C_{SF-LC} = 100%,
   - 100% filling of the considered tanks carrying ballast water.

b) The strength assessment is to be carried out for all the dynamic load cases as defined in Ch 4, Sec 2.

c) An operational restriction corresponding to the analysed condition is to be added in the loading manual.

The actual loading pattern, draught, *GM* and k_r from the loading manual are to be used in the FE analysis. Where the *GM* and k_r are not given in the ship's loading manual, *GM* and k_r are to be determined in accordance with Ch 4, Sec 3.

Table 2 : Load combinations for FE analysis for two oil-tight bulkheads oil tankers applicable to midship cargo hold region

No.	Loading pattern	Still water loads			Dynamic load cases		
		Draught	$C_{BM\text{-}LC}$: % of perm. SWBM	$C_{SF\text{-}LC}$: % of perm. SWSF	Midship cargo region		
Seagoing conditions							
A1	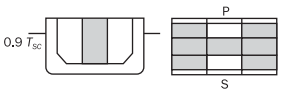	$0.9T_{SC}$	100% (sagging)	100%	HSM-1	BSP-1P/S	N/A
			100% (hogging)	100%	HSM-2 FSM-2	BSP-1P/S	OST-2P/S OSA-1P/S
A2	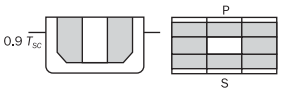	$0.9T_{SC}$	100% (sagging)	100%	HSM-1	BSR-1P/S BSP-1P/S	N/A
			100% (hogging)	100%	HSM-2 FSM-2	BSR-1P/S BSP-1P/S	N/A
A3	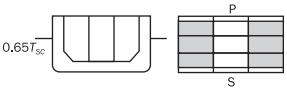	$0.65T_{SC}$	100% (hogging)	100% (4) Max SFLC	HSM-2	N/A	N/A
				100% (5) Max SFLC	HSM-2	N/A	N/A
				100%	N/A	BSP-1P/S	N/A
			0%	100% (6) Max SFLC	HSM-1	N/A	N/A
				100%	N/A	BSP-1P/S	N/A
A4	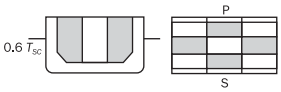	$0.6T_{SC}$	100% (sagging)	100%	HSM-1	BSR-1P/S BSP-1P/S	OSA-2P/S
A5	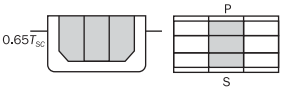	$0.65T_{SC}$	100% (sagging)	100% (4) Max SFLC	HSM-1	N/A	N/A
				100% (5) Max SFLC	HSM-1	N/A	N/A
				100%	N/A	BSP-1P/S	N/A
			0%	100% (6) Max SFLC	HSM-2	N/A	N/A
				100%	N/A	BSP-1P/S	N/A
A6	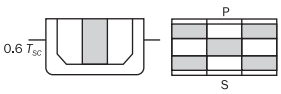	$0.6T_{SC}$	100% (hogging)	100%	HSM-2	BSR-1P/S BSP-1P/S	OSA-1P/S
A7a	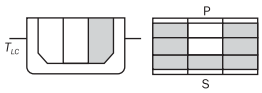	T_{LC}	100% (hogging)	100%	HSM-2 FSM-2	BSR-1P/S BSP-1P/S	OST-2P/S OSA-1P/S OSA-2P/S

No.	Loading pattern	Still water loads			Dynamic load cases		
		Draught	$C_{BM\text{-}LC}$: % of perm. SWBM	$C_{SF\text{-}LC}$: % of perm. SWSF	Midship cargo region		
A7b	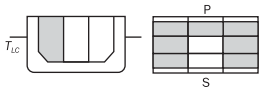	T_{LC}	100% (hogging)	100%	HSM-2 FSM-2	BSR-1P/S BSP-1P/S	OST-2P/S OSA-1P/S OSA-2P/S
A8	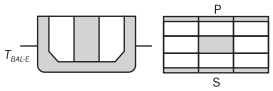	$T_{BAL\text{-}E}$	100% (sagging)	100%	HSM-1	BSR-1P/S BSP-1P/S	OSA-2P/S
Harbour and testing conditions							
A9	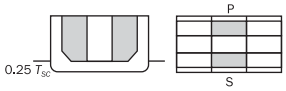	$0.25T_{SC}$	100% (sagging)	100%	N/A		
A10	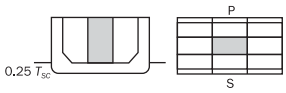	$0.25T_{SC}$	100% (sagging)	100%	N/A		
A11	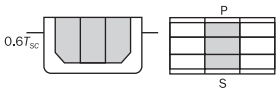	$0.6T_{SC}$	100% (sagging)	100% (2) Max SFLC	N/A		
				100% (3) Max SFLC	N/A		
A12a (1)	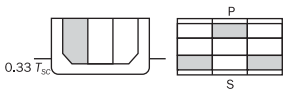	$0.33T_{SC}$	N/A	N/A	N/A		
A12b (1)	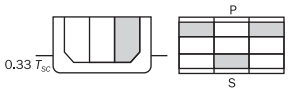	$0.33T_{SC}$	N/A	N/A	N/A		
A13	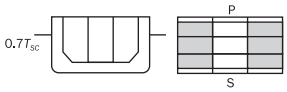	$0.7T_{SC}$	100% (hogging)	100% (2) Max SFLC	N/A		
				100% (3) Max SFLC	N/A		
A14	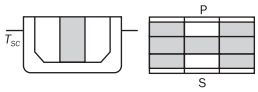	T_{SC}	100% (hogging)	100%	N/A		

(1) The actual shear force and bending moment that results from the application of local loads to the FE model are to be used. Adjusting vertical loads and bending moments are not applied.

(2) The shear force is to be adjusted to target value at aft bulkhead of the mid-hold.

(3) The shear force is to be adjusted to target value at forward bulkhead of the mid-hold.

(4) For the mid-hold where $x_{b\text{-}aft} \leq 0.5L$ and $x_{b\text{-}fwd} \geq 0.5L$, the shear force is to be adjusted to target value at aft bulkhead of the mid-hold.

(5) For the mid-hold where $x_{b\text{-}aft} \leq 0.5L$ and $x_{b\text{-}fwd} \geq 0.5L$, the shear force is to be adjusted to target value at forward bulkhead of the mid-hold.

(6) This load combination is to be considered only for the mid-hold where $x_{b\text{-}aft} > 0.5L$ or $x_{b\text{-}fwd} < 0.5L$.

Table 3 : Load combinations for FE analysis for one centreline oil-tight bulkheads oil tankers applicable to midship cargo region

No.	Loading pattern	Still water loads			Dynamic load cases		
		Draught	$C_{BM\text{-}LC}$: % of perm. SWBM	$C_{SF\text{-}LC}$: % of perm. SWSF	Midship cargo region		
Seagoing conditions							
B1	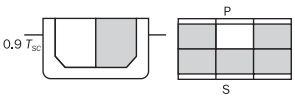	$0.9T_{SC}$	100% (sagging)	100%	HSM-1 HSA-1	BSP-1P/S	N/A
			100% (hogging)	100%	HSM-2 FSM-2	BSR-1P BSP-1P	OST-2P
B2	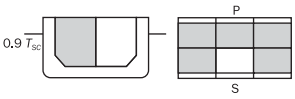	$0.9T_{SC}$	100% (sagging)	100%	HSM-1 HSA-1	BSP-1P/S	N/A
			100% (hogging)	100%	HSM-2 FSM-2	BSR-1S BSP-1S	OST-2S
B3	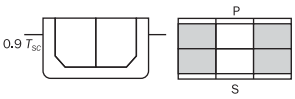	$0.9T_{SC}$	100% (hogging)	100% (3) Max SFLC	HSM-2 FSM-2	N/A	N/A
				100% (4) Max SFLC	HSM-2 FSM-2	N/A	N/A
				100%	N/A	BSP-1P/S	N/A
			0%	100% (5) Max SFLC	HSM-1 FSM-1	N/A	N/A
B4	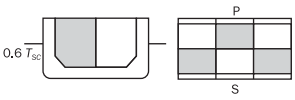	$0.6T_{SC}$	100% (sagging)	75%	HSM-1	BSP-1P	OSA-2P/S
B5	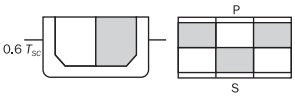	$0.6T_{SC}$	100% (sagging)	75%	HSM-1	BSP-1S	OSA-2P/S
B6	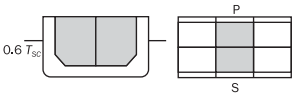	$0.6T_{SC}$	100% (sagging)	100% (3) Max SFLC	HSM-1	N/A	N/A
				100% (4) Max SFLC	HSM-1	N/A	N/A
				100%	N/A	BSP-1P/S	N/A
			0%	100% (5) Max SFLC	HSM-2	N/A	N/A
B7	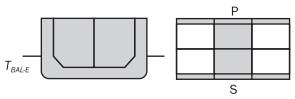	$T_{BAL\text{-}E}$	100% (sagging)	100%	HSM-1	BSP-1P/S	N/A
Harbour and testing conditions							
B8	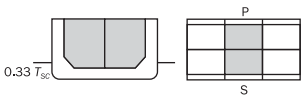	$0.33T_{SC}$	100% (sagging)	100% (1) Max SFLC	N/A		
				100% (2) Max SFLC	N/A		
B9	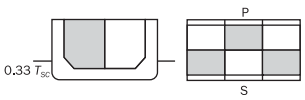	$0.33T_{SC}$	100% (sagging)	75%	N/A		

No.	Loading pattern	Still water loads			Dynamic load cases
		Draught	$C_{BM\text{-}LC}$: % of perm. SWBM	$C_{SF\text{-}LC}$: % of perm. SWSF	Midship cargo region
B10	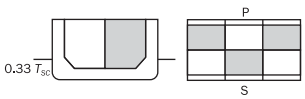	$0.33T_{SC}$	100% (sagging)	75%	N/A
B11	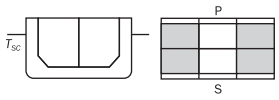	T_{SC}	100% (hogging)	100% (1) Max SFLC	N/A
				100% (2) Max SFLC	N/A

(1) The shear force is to be adjusted to target value at aft bulkhead of the mid-hold.

(2) The shear force is to be adjusted to target value at forward bulkhead of the mid-hold.

(3) For the mid-hold where $x_{b\text{-}aft} \leq 0.5L$ and $x_{b\text{-}fwd} \geq 0.5L$, the shear force is to be adjusted to target value at aft bulkhead of the mid-hold.

(4) For the mid-hold where $x_{b\text{-}aft} \leq 0.5L$ and $x_{b\text{-}fwd} \geq 0.5L$, the shear force is to be adjusted to target value at forward bulkhead of the mid-hold.

(5) This load combination is to be considered only For the mid-hold where $x_{b\text{-}aft} > 0.5L$ or $x_{b\text{-}fwd} < 0.5L$.

Table 4 : Load combinations for FE analysis for two oil-tight bulkheads oil tankers applicable to outside midship cargo hold region

No.	Loading pattern	Still water loads			Dynamic load cases	
		Draught	$C_{BM\text{-}LC}$: % of perm. SWBM	$C_{SF\text{-}LC}$: % of perm. SWSF	Aft region	Forward region
Seagoing conditions						
A1	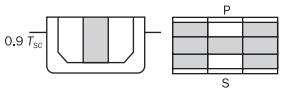	$0.9T_{SC}$	100% (sagging)	100%	HSM-1 BSP-1P/S,	HSM-1, BSP-1P/S,
			100% (hogging)	100%	HSM-2, FSM-2 BSP-1P/S, OST-2P/S, OSA-1P/S,	HSM-2, FSM-2 BSP-1P/S,
A2	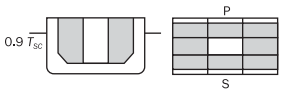	$0.9T_{SC}$	100% (sagging)	100%	HSM-1 BSP-1P/S,	HSM-1, FSM-1 BSP-1P/S, OSA-2P/S,
			100% (hogging)	100%	HSM-2, FSM-2 BSP-1P/S,	HSM-2, BSP-1P/S,
A3	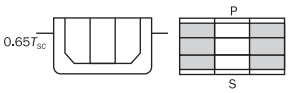	$0.65T_{SC}$	100% (hogging)	100% Max SFLC	HSM-2	HSM-2 FSM-2
				100%	BSP-1P/S,	BSP-1P/S, OSA-2P/S,
			0%	100% Max SFLC	HSM-1	HSM-1
				100%	N/A	BSP-1P/S, OSA-2P/S,
A4	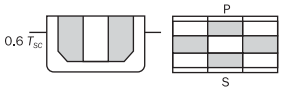	$0.6T_{SC}$	100% (sagging)	100%	HSM-1 BSP-1P/S, BSR-1P/S,	HSM-1 BSP-1P/S, BSR-1P/S, OSA-2P/S,
A5	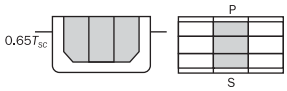	$0.65T_{SC}$	100% (sagging)	100% Max SFLC	HSM-1 FSM-1	HSM-1
				100%	BSP-1P/S,	BSP-1P/S, OSA-2P/S
			0%	100% Max SFLC	HSM-2	HSM-2
				100%	BSP-1P/S,	BSP-1P/S, OSA-2P/S
A6	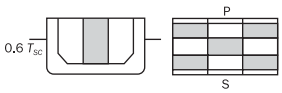	$0.6T_{SC}$	100% (hogging)	100%	HSM-2 BSP-1P/S, BSR-1P/S,	HSM-2, BSP-1P/S, BSR-1P/S, OSA-2P/S,

No.	Loading pattern	Still water loads			Dynamic load cases	
		Draught	$C_{BM\text{-}LC}$: % of perm. SWBM	$C_{SF\text{-}LC}$: % of perm. SWSF	Aft region	Forward region
A7a	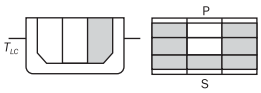	T_{LC}	100% (hogging)	100%	HSM-2, FSM-2 BSP-1P/S, BSR-1P, BSR-2S OSA-1P/S, OSA-2P/S, OST-2P	HSM-2, FSM-2 BSP-1P/S, BSR-1P, BSR-2S OSA-2P/S,
A7b	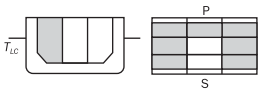	T_{LC}	100% (hogging)	100%	HSM-2, FSM-2 BSP-1P/S, BSR-2P, BSR-1S OSA-1P/S, OSA-2P/S, OST-2S	HSM-2, FSM-2 BSP-1P/S, BSR-2P, BSR-1S OSA-2P/S,
Harbour and testing conditions						
A9	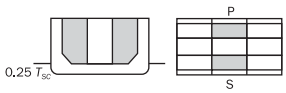	$0.25T_{SC}$	100% (sagging)	100%	N/A	
A10	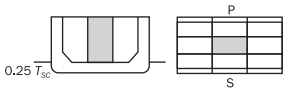	$0.25T_{SC}$	100% (sagging)	100%	N/A	
A11	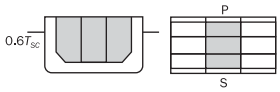	$0.6T_{SC}$	100% (sagging)	100% (2) Max SFLC	N/A	
				100% (3) Max SFLC	N/A	
A12 a (1)	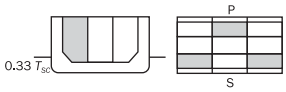	$0.33T_{SC}$	N/A	N/A	N/A	
A12 b (1)	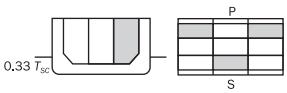	$0.33T_{SC}$	N/A	N/A	N/A	
A13	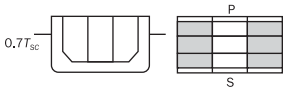	$0.7T_{SC}$	100% (hogging)	100% (2) Max SFLC	N/A	
				100% (3) Max SFLC	N/A	
A14	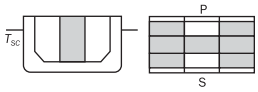	T_{SC}	100% (hogging)	100%	N/A	

(1) The actual shear force and bending moment that results from the application of local loads to the FE model are to be used. Adjusting vertical loads and bending moments are not applied.

(2) The shear force is to be adjusted to target value at aft bulkhead of the mid-hold.

(3) The shear force is to be adjusted to target value at forward bulkhead of the mid-hold.

Table 5 : Load combinations for FE analysis for one centreline oil-tight bulkheads oil tankers applicable to outside midship cargo hold region

No.	Loading pattern	Still water loads			Dynamic load cases	
		Draught	$C_{BM\text{-}LC}$: % of perm. SWBM	$C_{SF\text{-}LC}$: % of perm. SWSF	Aft region	Forward region
Seagoing conditions						
B1	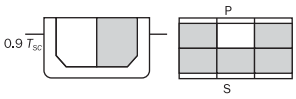	0.9T_{SC}	100% (sagging)	100%	HSM-1, FSM1 BSP-1P/S, OSA-1S	HSM-1 BSP-1P/S, OSA-2S
			100% (hogging)	100%	HSM-2, FSM-2 BSP-1P/S, OSA-1P OST-2P/S,	HSM-2, FSM-2 BSP-1P/S, OSA-2S
B2	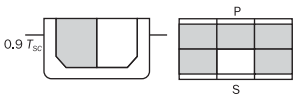	0.9T_{SC}	100% (sagging)	100%	HSM-1, FSM-1 BSP-1P/S, OSA-1P	HSM-1 BSP-1P/S, OSA-2P
			100% (hogging)	100%	HSM-2, FSM-2 BSP-1P/S, OSA-1S OST-2P/S,	HSM-2, FSM-2 BSP-1P/S, OSA-2P
B3	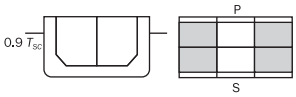	0.9T_{SC}	100% (hogging)	100% Max SFLC	HSM-2 FSM-2	HSM-2 FSM-2
				100%	BSP-1P/S, BSR-1P/S,	BSR-1P/S,
			0%	100% Max SFLC	HSM-1 FSM-1	HSM-1 FSM-1
				100%	BSP-1P/S,	BSP-1P/S,
B4	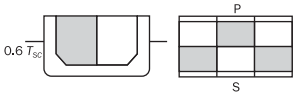	0.6T_{SC}	100% (sagging)	75%	HSM-1 BSR-1P/S,	HSM-1 BSP-1P/S, OSA-2P/S,
B5	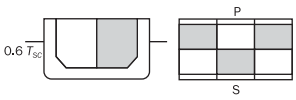	0.6T_{SC}	100% (sagging)	75%	HSM-1 BSR-1P/S,	HSM-1 BSP-1P/S, OSA-2P/S,
B6	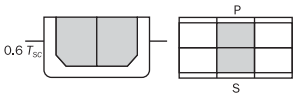	0.6T_{SC}	100% (sagging)	100% Max SFLC	HSM-1 FSM-1	HSM-1 FSM-1
				100%	OST-1P/S,	OSA-2P/S,
			0%	100% Max SFLC	HSM-2 FSM-2	HSM-2 FSM-2
				100%	OSA-2P/S,	OSA-2P/S,

No.	Loading pattern	Still water loads			Dynamic load cases	
		Draught	$C_{BM\text{-}LC}$: % of perm. SWBM	$C_{SF\text{-}LC}$: % of perm. SWSF	Aft region	Forward region
Harbour and testing conditions						
B8	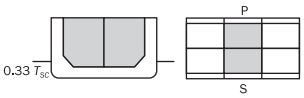	$0.33T_{SC}$	100% (sagging)	100% (1) Max SFLC	N/A	
				100% (2) Max SFLC	N/A	
B9	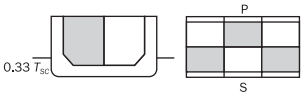	$0.33T_{SC}$	100% (sagging)	75%	N/A	
B10	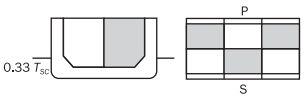	$0.33T_{SC}$	100% (sagging)	75%	N/A	
B11	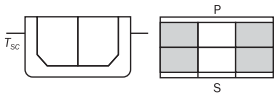	T_{SC}	100% (hogging)	100% (1) Max SFLC	N/A	
				100% (2) Max SFLC	N/A	

(1) The shear force is to be adjusted to target value at aft bulkhead of the mid-hold.

(2) The shear force is to be adjusted to target value at forward bulkhead of the mid-hold.

Table 6 : Load combinations for FE analysis for two oil-tight bulkheads oil tankers applicable for foremost cargo hold

No.	Loading pattern	Still water loads			Dynamic load cases
		Draught	$C_{BM\text{-}LC}$: % of perm. SWBM	$C_{SF\text{-}LC}$: % of perm. SWSF	Foremost cargo hold
Seagoing conditions					
A1	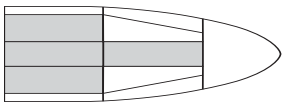	$0.9T_{SC}$	100% (sagging)	100%	HSM-1, FSM-1 BSP-1P/S, BSR-1P/S OSA-2P/S, OST-1P/S
A2	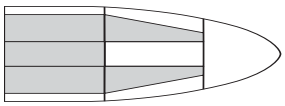	$0.9T_{SC}$	100% (sagging)	100%	HSM-1, OSA-2P/S
A3-1	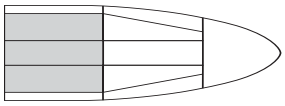	$0.65T_{SC}$	100% (sagging)	100%	HSM-1, OSA-2P/S
A3-2 (1)	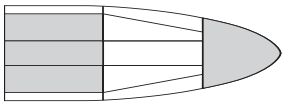	$0.65T_{SC}$	0%	100% Max SFLC	HSM-2
				100%	BSP-1P/S, OSA-2P/S
			100% (sagging)	100% Max SFLC	HSM-1
				100%	OSA-2P/S
A4 (1)	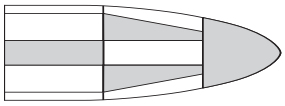	$0.6T_{SC}$	50% (hogging)	100%	FSM-1, BSP-1P/S, OSA-2P/S
A5	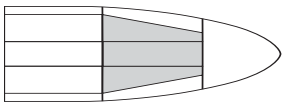	$0.65T_{SC}$	0%	100% Max SFLC	HSM-1
			100% (hogging)	100% Max SFLC	HSM-2
				100%	BSP-1P/S
A6 (1)	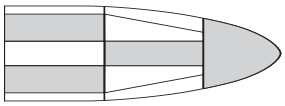	$0.6T_{SC}$	50% (hogging)	100%	OSA-2P/S
A7a	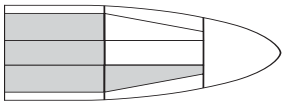	T_{LC}	100% (sagging)	100%	HSM-1, HSA-1, FSM-1, BSP-1P/S, BSR-1P/S OST-1P/S, OSA-2P/S
A7b	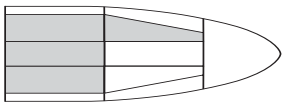	T_{LC}	100% (sagging)	100%	HSM-1, HSA-1, FSM-1, BSP-1P/S, BSR-1P/S OST-1P/S, OSA-2P/S
Harbour and testing conditions					
A9	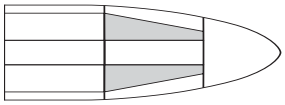	$0.25T_{SC}$	100% (hogging)	100%	N/A

No.	Loading pattern	Still water loads			Dynamic load cases
		Draught	$C_{BM\text{-}LC}$: % of perm. SWBM	$C_{SF\text{-}LC}$: % of perm. SWSF	Foremost cargo hold
A10	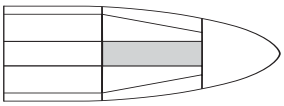	$0.25T_{SC}$	100% (hogging)	100%	N/A
A11	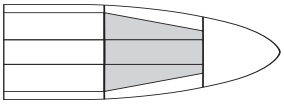	$0.6T_{SC}$	100% (hogging)	100% (2) Max SFLC	N/A
				100% (3) Max SFLC	N/A
A12-a (1) (4)	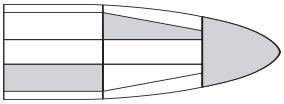	$0.33T_{SC}$	N/A	N/A	N/A
A12-b (1) (4)	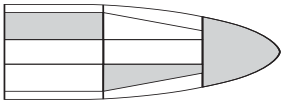	$0.33T_{SC}$	N/A	N/A	N/A
A13 (1)	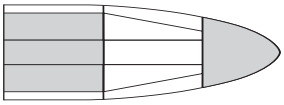	$0.7T_{SC}$	100% (sagging)	100% (2) Max SFLC	N/A
				100% (3) Max SFLC	N/A
A14	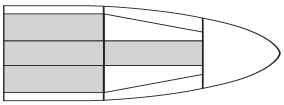	T_{SC}	100% (sagging)	100%	N/A

(1) 100% filling of all fore peak water ballast tanks.
(2) The shear force is to be adjusted to target value at aft bulkhead of the mid-hold.
(3) The shear force is to be adjusted to target value at forward bulkhead of the mid-hold.
(4) The actual shear force and bending moment that results from the application of local loads to the FE model are to be used. Adjusting vertical loads and bending moments are not applied.

Table 7 : Load combination for FE analysis for one centreline oil-tight bulkheads oil tankers applicable for foremost cargo hold

No.	Loading pattern	Still water loads			Dynamic load cases
		Draught	$C_{BM\text{-}LC}$: % of perm. SWBM	$C_{SF\text{-}LC}$: % of perm. SWSF	Foremost cargo hold
Seagoing conditions					
B1	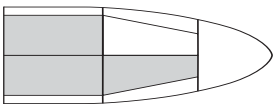	$0.9T_{SC}$	100% (sagging)	100%	HSM-1 BSP-1P/S OSA-2P/S
B2	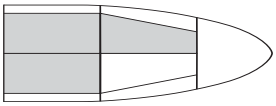	$0.9T_{SC}$	100% (sagging)	100%	HSM-1 BSP-1P/S OSA-2P/S
B3-1	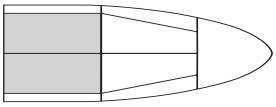	$0.9T_{SC}$	100% (sagging)	100%	BSP-1S/P, OSA-2S/P, HSM-1

No.	Loading pattern	Still water loads			Dynamic load cases
		Draught	$C_{BM\text{-}LC}$: % of perm. SWBM	$C_{SF\text{-}LC}$: % of perm. SWSF	Foremost cargo hold
B3-2 (1)	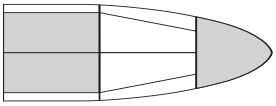	$0.9T_{SC}$	0%	100% Max SFLC	HSM-2,
				100%	BSP-1S/P, OSA-2S/P,
			100% (sagging)	100% Max SFLC	HSM-1, FMS-1
				100%	BSP-1S/P, OST-1S/P, OSA-2P/S
B4 (1)	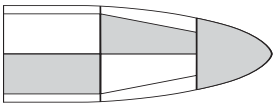	$0.6T_{SC}$	100% (hogging)	75%	BSP-1P/S, OSA-2P/S
B5 (1)	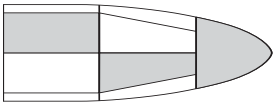	$0.6T_{SC}$	100% (hogging)	75%	BSP-1P/S, OSA-2P/S
B6	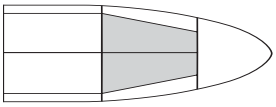	$0.6T_{SC}$	0%	100% Max SFLC	HSM-1
				100%	OSA-2P/S
			100% (hogging)	100% Max SFLC	HSM-2, FSM-2,
				100%	OSA-2P/S
Harbour and testing conditions					
B8	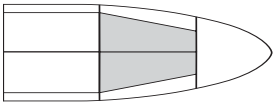	$0.33T_{SC}$	100% (hogging)	100% (2) Max SFLC	N/A
				100% (3) Max SFLC	N/A
B9 (1)	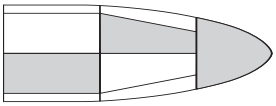	$0.33T_{SC}$	100% (hogging)	75%	N/A
B10 (1)	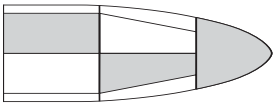	$0.33T_{SC}$	100% (hogging)	75%	N/A
B11-1	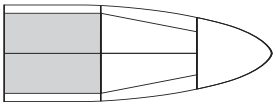	T_{SC}	100% (sagging)	100%	N/A
B11-2 (1)	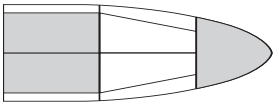	T_{SC}	100% (sagging)	100% (2) Max SFLC	N/A
				100% (3) Max SFLC	N/A

(1) 100% filling of all fore end water ballast tanks.
(2) The shear force is to be adjusted to target value at aft bulkhead of the mid-hold.
(3) The shear force is to be adjusted to target value at forward bulkhead of the mid-hold.

Table 8 : Load combinations for FE analysis for two oil-tight bulkheads oil tankers applicable for aftmost cargo hold

No.	Loading pattern	Still water loads			Dynamic load cases
		Draught	$C_{BM\text{-}LC}$: % of perm. SWBM	$C_{SF\text{-}LC}$: % of perm. SWSF	Aftmost cargo hold
Seagoing conditions					
A1	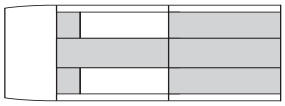	$0.9T_{SC}$	100% (sagging)	100%	FSM-1, HSM-1, BSP-1P/S
			100% (hogging)	100%	HSM-2, BSP-1P/S, BSR-1P/S OSA-1P/S
A2	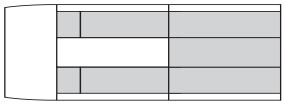	$0.9T_{SC}$	100% (sagging)	100%	HSM-1, FSM-1 BSR-1P/S, OST-1P/S
			100% (hogging)	100%	HSM-2, FSM-1, FSM-2, OSA-1P/S
A3-1 (1) (2)	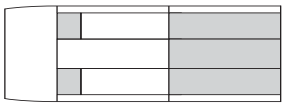	$0.65T_{SC}$	100% (hogging)	100% Max SFLC	HSM-2 FSM-2
			100% (sagging)	100% Max SFLC	HSM-1, FSM-1
				100%	BSP-1P/S
A3-2 (1) (3)	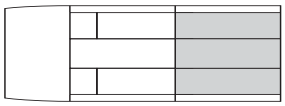	$0.65T_{SC}$	100% (hogging)	100% Max SFLC	HSM-2
				100%	BSP-1P/S, OSA-1P/S
			100% (sagging)	100% Max SFLC	HSM-1, FSM-1
				100%	BSP-1P/S, OST-1P/S
A4	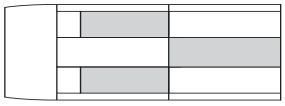	$0.6T_{SC}$	100% (sagging)	100%	HSM-1, BSP-1P/S
			100% (hogging)	100%	HSM-2, FSM-1, BSP-1P/S, OSA-1P/S, OSA-2P/S
A5-1 (2)	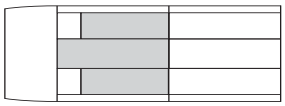	$0.65T_{SC}$	0%	100% Max SFLC	HSM-1, HSM-2, FSM-1,
			100% (hogging)	100% Max SFLC	HSM-2, FSM-1
				100%	BSP-1P/S
A5-2 (3)	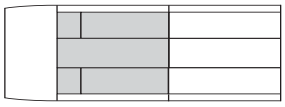	$0.65T_{SC}$	0%	100% Max SFLC	HSM-1, HSM-2
				100%	BSP-1P/S, BSR-1P/S
			100% (hogging)	100% Max SFLC	HSM-2, FSM-2
A6	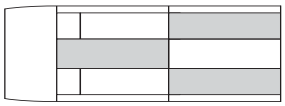	$0.6T_{SC}$	100% (hogging)	100%	HSM-2, FSM-1, BSP-1P/S, BSR-1P/S, OSA-1P/S
A7a	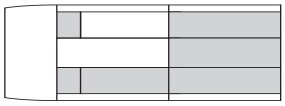	T_{LC}	100% (hogging)	100%	HSM-2, FSM-1, BSP-1P/S, BSR-1P/S, OSA-1P/S

No.	Loading pattern	Still water loads			Dynamic load cases
		Draught	$C_{BM\text{-}LC}$: % of perm. SWBM	$C_{SF\text{-}LC}$: % of perm. SWSF	Aftmost cargo hold
A7b	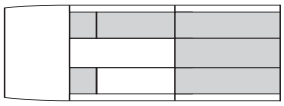	T_{LC}	100% (hogging)	100%	HSM-2, FSM-1, BSP-1P/S, BSR-1P/S, OSA-1P/S
Harbour and testing conditions					
A9	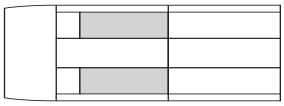	$0.25T_{SC}$	100% (hogging)	100%	N/A
A10	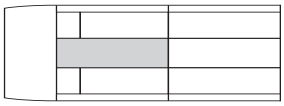	$0.25T_{SC}$	100% (hogging)	100%	N/A
A11-1 (2)	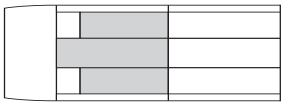	$0.6T_{SC}$	100% (hogging)	100% (5) Max SFLC	N/A
A11-2 (3)	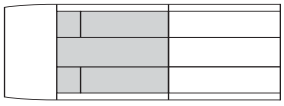	$0.6T_{SC}$	100% (hogging)	100% (5) Max SFLC	N/A
				100% (6) Max SFLC	N/A
A12a (4)	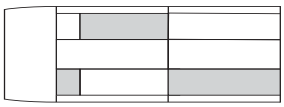	$0.33T_{SC}$	N/A	N/A	N/A
A12b (4)	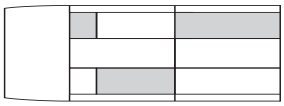	$0.33T_{SC}$	N/A	N/A	N/A
A13-1 (1) (2)	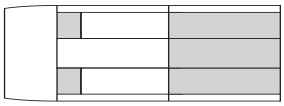	$0.7T_{SC}$	100% (hogging)	100% (5) Max SFLC	N/A
A13-2 (1) (3)	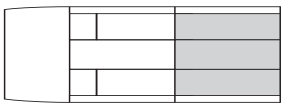	$0.7T_{SC}$	100% (hogging)	100% (5) Max SFLC	N/A
				100% (6) Max SFLC	N/A
			100% (sagging)	100% (5) Max SFLC	N/A
				100% (6) Max SFLC	N/A
A14	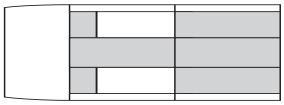	T_{SC}	100% (hogging)	100%	N/A
			100% (sagging)	100%	N/A

(1) 100% filling of fuel and water ballast tanks in engine room, with tank boundaries at the forward engine room bulkhead.

(2) The required adjustment in shear force at aft bulkhead of the considered hold is to be done at forward slop tank bulkhead.

(3) The required adjustment in shear force at aft bulkhead of the considered hold is to be done at forward machinery space bulkhead.

(4) The actual shear force and bending moment that results from the application of local loads to the FE model are to be used. Adjusting vertical loads and bending moments are not applied.

(5) The shear force is to be adjusted to target value at aft bulkhead of the mid-hold.

(6) The shear force is to be adjusted to target value at forward bulkhead of the mid-hold.

Table 9 : Load combination for FE analysis for one centreline oil-tight bulkheads oil tankers applicable for the aftmost cargo hold

No.	Loading pattern	Still water loads			Dynamic load cases
		Draught	$C_{BM\text{-}LC}$: % of perm. SWBM	$C_{SF\text{-}LC}$: % of perm. SWSF	Aftmost cargo hold
Seagoing conditions					
B1	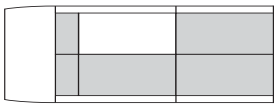	$0.9T_{SC}$	100% (sagging)	100%	HSM-1, FSM-1 BSP-1P/S, BSR-1P/S
			100% (hogging)	100%	HSM-2 BSP-1P/S, OSA-1P/S
B2	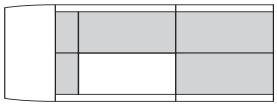	$0.9T_{SC}$	100% (sagging)	100%	HSM-1, FSM-1 BSP-1P/S, BSR-1P/S
			100% (hogging)	100%	HSM-2 BSP-1P/S, OSA-1P/S
B3-1 (1) (2)	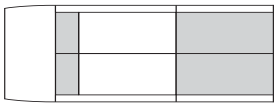	$0.9T_{SC}$	100% (hogging)	100% Max SFLC	HSM-2
				100%	BSP-1P/S
			100% (sagging)	100% Max SFLC	HSM-1 FSM-1
				100%	BSP-1P/S
B3-2 (1) (3)	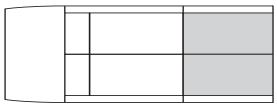	$0.9T_{SC}$	100% (hogging)	100% Max SFLC	HSM-2, FSM-2
				100%	BSP-1P/S, OSA-1P/S
			100% (sagging)	100% Max SFLC	HSM-1 FSM-1
				100%	BSP-1P/S
B4	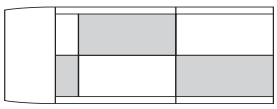	$0.6T_{SC}$	100% (hogging)	75%	HSM-2, BSP-1P/S, OSA-1P/S
B5	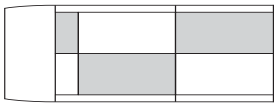	$0.6T_{SC}$	100% (hogging)	75%	HSM-2, BSP-1P/S, OSA-1P/S
B6-1 (2)	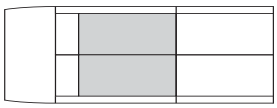	$0.6T_{SC}$	0%	100% Max SFLC	HSM-1
			100% (hogging)	100% Max SFLC	HSM-2
B6-2 (3)	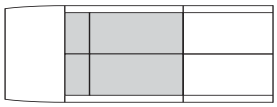	$0.6T_{SC}$	0%	100% Max SFLC	HSM-1
			100% (hogging)	100% Max SFLC	HSM-2
				100%	HSA-2, BSR-1P/S,

No.	Loading pattern	Still water loads			Dynamic load cases
		Draught	$C_{BM\text{-}LC}$: % of perm. SWBM	$C_{SF\text{-}LC}$: % of perm. SWSF	Aftmost cargo hold
Harbour and testing conditions					
B8-1 (2)	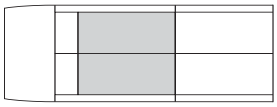	$0.33T_{SC}$	100% (hogging)	100% (4) Max SFLC	N/A
B8-2 (3)	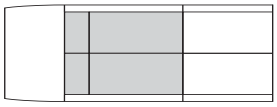	$0.33T_{SC}$	100% (hogging)	100% (4) Max SFLC	N/A
				100% (5) Max SFLC	N/A
			100% (sagging)	100% (4) Max SFLC	N/A
				100% (5) Max SFLC	N/A
B9	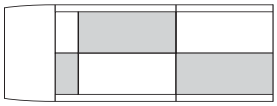	$0.33T_{SC}$	100% (hogging)	75%	N/A
B10	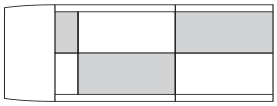	$0.33T_{SC}$	100% (hogging)	75%	N/A
B11-1 (1) (2)	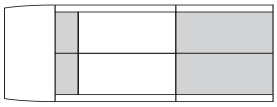	T_{SC}	100% (hogging)	100% (4) Max SFLC	N/A
			100% (sagging)	100% (4) Max SFLC	N/A
B11-2 (1) (3)	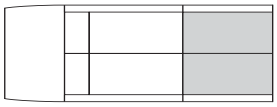	T_{SC}	100% (hogging)	100% (4) Max SFLC	N/A
				100% (5) Max SFLC	N/A
			100% (sagging)	100% (4) Max SFLC	N/A
				100% (5) Max SFLC	N/A

(1) 100% filling of fuel and water ballast tanks in engine room, with tank boundaries at the forward engine room bulkhead.

(2) The required adjustment in shear force at aft bulkhead of the considered hold is to be done at forward slop tank bulkhead.

(3) The required adjustment in shear force at aft bulkhead of the considered hold is to be done at forward machinery space bulkhead.

(4) The shear force is to be adjusted to target value at aft bulkhead of the mid-hold.

(5) The shear force is to be adjusted to target value at forward bulkhead of the mid-hold.

4 BULK CARRIERS

4.1 Specific design loading condition

4.1.1 Seagoing conditions

The following seagoing loading conditions are to be included, as a minimum, in the loading manual:

a) Cargo loading conditions as defined in [4.1.2] to [4.1.4].

a) Heavy ballast condition where the ballast tanks may be full, partially full or empty. Where ballast tanks are partially full, the conditions in [2.2.1] are to be complied with. The propeller immersion ℓ/D_p is to be at least 60%. The trim is to be by the stern and is not to exceed 0.015 L_{LL}. The moulded forward draught is not to be taken less than the smaller of 0.03 L_{LL} or 8 m.

4.1.2 Cargo loading condition for BC-C

Homogeneous cargo loaded condition is to be included in the loading manual where the cargo density corresponds to all cargo holds, including hatchways, being 100% full at scantling draught with all ballast tanks empty.

4.1.3 Cargo loading condition for BC-B

As required for BC-C, plus:

Homogeneous cargo loaded condition is to be included in the loading manual where the cargo density is taken equal to 3.0 t/m^3, and all cargo holds are taken with the same filling ratio (cargo mass/hold cubic capacity) in all cargo holds at scantling draught with all ballast tanks empty.

In cases where the cargo density applied for this design loading condition is different from 3.0 t/m^3, the maximum density of the cargo that the ship is allowed to carry is to be indicated in the loading manual. If the maximum density is less than 3.0 t/m^3 then the additional service feature {maximum cargo density *x.y* t/m^3} is to be indicated as defined in Ch 1, Sec 1, [3.2.1].

4.1.4 Cargo loading condition for BC-A

As required for BC-B, plus:

At least one cargo loaded condition with specified holds empty, with cargo density 3.0 t/m^3, and the same filling ratio (cargo mass/hold cubic capacity) in all loaded cargo holds at scantling draught with all ballast tanks empty.

The combination of specified empty holds is to be indicated with the additional service feature {holds *a*, *b*, ... may be empty}.

In such cases where the design cargo density applied is different from 3.0 t/m^3, the maximum density of the cargo that the ship is allowed to carry is to be indicated in the loading manual. If the maximum density is less than 3.0 t/m^3 then the additional service feature {holds *a*, *b*, ... may be empty with maximum cargo density *x.y* t/m^3} is to be indicated as defined in Ch 1, Sec 1, [3.2.1].

4.1.5 Additional ballast conditions

The following ballast conditions are to be included in the loading manual for longitudinal strength assessment:

- Ballast conditions with all ballast tanks 100% full,
- Heavy ballast conditions with all ballast tanks 100% full and one cargo hold adapted and designated for the carriage of water ballast at sea, where provided, 100% full.
  Where more than one hold is adapted and designated for the carriage of water ballast at sea, it is not required that two or more holds be assumed 100% full simultaneously in the longitudinal strength assessment, unless such conditions are expected in the heavy ballast condition. Unless each hold is individually investigated, the designated heavy ballast hold and any/all restrictions for the use of other ballast hold(s) are to be indicated in the loading manual.

4.1.6 Steel coils or heavy cargoes

The following note is to be included in the loading manual:

"Where the ship engages in a service carrying such cargoes as steel coils or heavy cargoes that may have an adverse effect on the local strength of the double bottom and which is not described as cargo in the loading manual, the maximum permissible and the minimum required mass of cargo are to be considered specially."

4.2 Design load combinations for direct strength analysis

4.2.1 Applicable general loading patterns

The following loading patterns are to be applied:

a) Any cargo hold carrying M_{Full} with fuel oil tanks in way of the cargo hold, if any, being 100% full and ballast water tanks in the double bottom in way of the cargo hold being empty, at scantling draught.

b) Any cargo hold carrying minimum 50% of M_H, with all double bottom tanks in way of the cargo hold being empty, at scantling draught.

c) Any cargo hold taken empty, with all double bottom tanks in way of the cargo hold being empty, at the deepest ballast draught. Where a topside and double bottom tank are permanently connected as a common tank, the following conditions are to be considered:

- The topside and double bottom tank empty,
- The topside and double bottom tank full.

4.2.2 Multiport conditions

The following multiport conditions are applicable to all types of bulk carriers except when the service feature {no MP} is assigned:

a) Any cargo hold carrying M_{Full} with fuel oil tanks in way of the cargo hold, if any, being 100% full and ballast water tanks in the double bottom in way of the cargo hold being empty, at 67% of scantling draught.

b) Any cargo hold taken empty with all double bottom tanks in way of the cargo hold being empty, at 83% of scantling draught.

c) Any two adjacent cargo holds carrying M_{Full} with the next holds being empty, with fuel oil tanks in way of the cargo hold, if any, being 100% full and ballast water tanks in the double bottom in way of the cargo hold being empty, at 67% of the scantling draught. This requirement to the mass of the cargo and fuel oil in double bottom tanks in way of the cargo hold applies also to the condition where the adjacent hold is filled with ballast.

d) Any two adjacent cargo holds being empty with the next holds being full, with all double bottom tanks in way of the cargo hold being empty, at 75% of scantling draught.

4.2.3 Alternate conditions

The following alternate conditions are applicable to BC-A only:

a) Cargo holds which are intended to be empty at scantling draught, being empty with all double bottom tanks in way of the cargo hold also being empty.

b) Cargo holds which are intended to be loaded with high density cargo, carrying M_{HD} plus 10% of M_H, in the partially filled condition with highest density according to Ch 4, Sec 6, Table 1. The fuel oil tanks in way of the cargo hold, if any, being 100% full and ballast water tanks in the double bottom being empty in way of the cargo hold, at scantling draught.

c) Cargo holds which are intended to be loaded with high density cargo, carrying M_{HD} plus 10% of M_H in the full condition with lowest density according to Ch 4, Sec 6, Table 1. The fuel oil tanks in way of the cargo hold, if any, being 100% full and ballast water tanks in the double bottom being empty in way of the cargo hold, at scantling draught.

d) If the ship is intended to operate in alternate block load condition, any two adjacent cargo holds are to be loaded with the next holds being empty, carrying 10% of M_H in each hold in addition to the maximum cargo load according to that design loading condition, with fuel oil tanks in way of the cargo hold, if any, being 100% full and ballast water tanks in the double bottom in way of the cargo hold being empty, at scantling draught. In operation the maximum allowable mass is to be limited to the maximum cargo load according to the design loading conditions.

4.2.4 Heavy ballast condition

The following condition applies to ballast holds only:

- Cargo holds which are designed as ballast water holds, being 100% full of ballast water including hatchways, with all double bottom tanks in way of the cargo hold being 100% full, at any heavy ballast draught. For ballast holds adjacent to topside wing, hopper and double bottom tanks, it shall be strengthwise acceptable that the ballast holds are filled when the topside wing, hopper, stool, and double bottom tanks are empty.

4.2.5 Additional harbour condition for all bulk carriers

The following additional harbour conditions apply to all bulk carriers:

a) At reduced draught during loading and unloading in harbour, the maximum allowable mass in a cargo hold may be increased by 15% of the maximum mass allowed at the scantling draught in seagoing condition, but is not to exceed the mass allowed at scantling draught in the seagoing condition. The minimum required mass may be reduced by the same amount.

b) Any single cargo hold holding the maximum allowable seagoing mass at 67% of scantling draught, in harbour condition.

c) Any two adjacent cargo holds carrying M_{Full} with the next holds being empty, with fuel oil tanks in the double bottom in way of the cargo hold, if any, being 100% full and ballast water tanks in the double bottom in way of the cargo hold being empty, at 67% of scantling draught, in harbour condition.

4.2.6 Design load combinations for direct strength analysis

The loading patterns to be considered in the direct strength analysis of bulk carriers are summarised in Table 10. Load combinations providing the calculations details for each loading pattern are given in Table 12 to Table 21.

Table 10 : Applicable loading patterns according to additional service features

Loading pattern	Requirement	BC-			BC- {no MP}		
		A	B	C	A	B	C
Full load in homogeneous condition	[4.2.1] item a	x	x	x	x	x	x
Slack load	[4.2.1] item b	x	x	x	x	x	x
Deepest ballast	[4.2.1] item c	x	x	x	x	x	x
Multiport-1	[4.2.2] item a	x	x	x			
Multiport-2	[4.2.2] item b	x	x	x			
Multiport-3	[4.2.2] item c	x	x	x			
Multiport-4	[4.2.2] item d	x	x	x			
Alternate load partial	[4.2.3] items a & b	x			x		
Alternate load full	[4.2.3] items a & c	x			x		
Alternate block load	[4.2.3] item d	x			x		
Heavy ballast	[4.2.4]	x	x	x	x	x	x
Harbour condition	[4.2.5]	x	x	x	x	x	x

4.2.7

The design load combinations for FE analysis are given as follows:

Table 11 : Design load combinations for Bulk Carriers

	Midship cargo hold region	Outside midship cargo hold region	Aftmost cargo hold	Foremost cargo hold
BC-A – EA	Table 12	Table 15	N/A	N/A
BC-A – FA	Table 13	Table 16	Table 18	Table 20
BC- B & BC-C	Table 14	Table 17	Table 19	Table 21
Note 1: **Outside midship cargo hold region means the forward or aft cargo hold region except the foremost and aftmost cargo holds**				

4.3 Hold mass curves

4.3.1

Based on the design loading criteria, as given in [4.2.1] to [4.2.5] except [4.2.4], hold mass curves for each single hold, as well as for any two adjacent holds are to be included in the loading manual and the loading instrument. The maximum allowable or minimum required cargo mass in a cargo hold, or in two adjacent loaded holds is related to the net load on the double bottom. The net load on the double bottom is a function of draught, cargo mass in the cargo hold, as well as the mass of fuel oil and ballast water contained in double bottom tanks.

4.3.2

Hold mass curves are to be calculated according to Ch 4, App 1 showing maximum allowable and minimum required masses as a function of draught in seagoing condition as well as during loading and unloading in harbour.

Table 12 : FE Load combinations applicable to empty hold in alternate condition of BC-A (EA) - midship cargo hold region

No.	Description Req^t ref	Loading pattern	Aft	Mid	Fore	Draught	C_{BM-LC} : % of perm. SWBM	C_{SF-LC} : % of perm. SWSF	Dynamic load case
Seagoing conditions									
1 (2)	Full load [4.1.3]	M_H M_H M_H				T_{SC}	50% (sag.)	100%	BSP-1P/S OST-1P/S
2 (1)	Full load [4.2.1] item a	M_{Full} M_{Full} M_{Full}				T_{SC}	50% (sag.)	100%	BSP-1P/S
3	Slack load [4.2.1] item b	50% M_H M_{Full} M_{Full}				T_{SC}	0%	100%	BSP-1P/S
4	Slack load [4.2.1] item b	M_{Full} M_{Full} 50% M_H				T_{SC}	0%	100%	BSP-1P/S
5 (3) (4)	Deepest ballast [4.2.1] item c					T_{Bal-H}	100% (hog.)	100%	FSM-2 BSR-1P/S OST-2P/S
							100% (sag.)	100%	BSP-1P/S BSR-1P/S OST-1P/S
6	Multiport 3 [4.2.2] item c	M_{Full} M_{Full}				$0.67T_{SC}$	100% (sag.)	100%	HSM-1 OST-1P/S
7	Multiport 3 [4.2.2] item c	M_{Full} M_{Full}				$0.67T_{SC}$	100% (sag.)	100%	HSM-1 OST-1P/S
8	Multiport 4 [4.2.2] item d	M_{Full}				$0.75T_{SC}$	100% (hog.)	100%	HSM-2 OST-2P/S
							100% (sag.)	100%	BSP-1P/S BSR-1P/S OST-1P/S
9	Multiport 4 [4.2.2] item d	M_{Full}				$0.75T_{SC}$	100% (hog.)	100%	HSM-2 OST-2P/S
							100% (sag.)	100%	BSP-1P/S BSR-1P/S OST-1P/S
10 (2)	Alternate load partial [4.2.3] items a and b	M_{ND}+ 0.1 M_H M_{ND}+ 0.1 M_H				T_{SC}	100% (hog.)	100% (8) Max SFLC	FSM-2
								100% (9) Max SFLC	FSM-2
								100%	OST-2P/S
							0%	100%	BSP-1P/S OST-1P/S
								100% (10) Max SFLC	HSM-1

No.	Description Req^t ref	Loading pattern	Aft	Mid	Fore	Draught	$C_{BM\text{-}LC}$: % of perm. SWBM	$C_{SF\text{-}LC}$: % of perm. SWSF	Dynamic load case
11	Alternate load full [4.2.3] items a and c	M_{HD}+ 0.1 M_H / M_{HD}+ 0.1 M_H				T_{SC}	100% (hog.)	100% (8) Max SFLC	FSM-2 HSM-2
								100% (9) Max SFLC	FSM-2 HSM-2
								100%	OST-2P/S
							0%	100%	BSP-1P/S
								100% (10) Max SFLC	HSM-1
12 (2) (5) (6) (13)	Alt-block load [4.2.3] item d	M_{BLK}+ 0.1 M_H / M_{BLK}+ 0.1 M_H				T_{SC}	100% (hog.)	100%	FSM-2 OST-2P/S
							100% (sag.)	100%	HSM-1 BSP-1P/S OST-1P/S
13 (2) (5) (6) (13)	Alt-block load [4.2.3] item d	M_{BLK}+ 0.1 M_H / M_{BLK}+ 0.1 M_H				T_{SC}	100% (hog.)	100%	FSM-2 OST-2P/S
							100% (sag.)	100%	HSM-1 BSP-1P/S OST-1P/S
14 (7)	Heavy ballast [4.2.4]					$T_{BAL\text{-}H}$	0%	100% (10) Max SFLC	FSM-2 HSM-2
								100%	BSR-1P/S
							100% (sag.)	100% (8) Max SFLC	HSM-1
								100% (9) Max SFLC	HSM-1
								100%	BSR-1P/S
15 (7)	Heavy ballast [4.2.4]					$T_{BAL\text{-}H}$	0%	100%	BSR-1P/S
							100% (sag.)	100%	BSR-1P/S
Harbour conditions									
16	Harbour condition [4.2.5] items a and c	M_{Full} / M_{Full}				T_{H1}	100% (hog.)	100%	N/A
							100% (sag.)	100%	N/A
17	Harbour condition [4.2.5] items a and c	M_{Full} / M_{Full}				T_{H1}	100% (hog.)	100%	N/A
							100% (sag.)	100%	N/A

No.	Description Req^t ref	Loading pattern	Aft	Mid	Fore	Draught	$C_{BM\text{-}LC}$: % of perm. SWBM	$C_{SF\text{-}LC}$: % of perm. SWSF	Dynamic load case
18	Harbour condition [4.2.5] items a and b	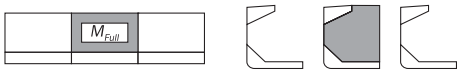				T_{H2}	100% (hog.)	100% (11) Max SFLC	N/A
								100% (12) Max SFLC	N/A
							100% (sag.)	100% (11) Max SFLC	N/A
								100% (12) Max SFLC	N/A
19 (13)	Alt-block harbour condition [4.2.3] item d	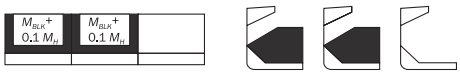				T_{H3}	100% (hog.)	100%	N/A
							100% (sag.)	100%	N/A
20 (13)	Alt-block harbour condition [4.2.3] item d					T_{H3}	100% (hog.)	100%	N/A
							100% (sag.)	100%	N/A

(1) Loading pattern No. 1 with the cargo mass M_{Full} and the maximum cargo density as defined in [4.1.4] can be analysed in lieu of this loading pattern.

(2) Maximum cargo density as defined in [4.1.4] is to be used for calculation of dry cargo pressure.

(3) In case of no ballast hold, normal ballast condition with assuming M_{SW} = 100% (hog.) is to be analysed.

(4) Position of ballast hold is to be adjusted as appropriate.

(5) This condition is only required when this loading condition is included in the loading manual.

(6) Actual still water vertical bending moment, as given in the loading manual, may be used instead of design value.

(7) This condition is to be considered for the empty hold which is assigned as ballast hold, if any.

(8) For the mid-hold where $x_{b\text{-}aft} \leq 0.5L$ and $x_{b\text{-}fwd} \geq 0.5L$, the shear force is to be adjusted to target value at aft bulkhead of the mid-hold.

(9) For the mid-hold where $x_{b\text{-}aft} \leq 0.5L$ and $x_{b\text{-}fwd} \geq 0.5L$, the shear force is to be adjusted to target value at forward bulkhead of the mid-hold.

(10) This load combination is to be considered only for the mid-hold where $x_{b\text{-}aft} > 0.5L$ or $x_{b\text{-}fwd} < 0.5L$.

(11) The shear force is to be adjusted to target value at aft bulkhead of the mid-hold.

(12) The shear force is to be adjusted to target value at forward bulkhead of the mid-hold.

(13) This condition is only required when block loading condition is included in the loading manual.

Table 13 : FE Load combinations applicable to loaded hold in alternate condition of BC-A (FA) - midship cargo hold region

No.	Description Req[t] ref	Loading pattern	Aft	Mid	Fore	Draught	C_{BM-LC} : % of perm. SWBM	C_{SF-LC} : % of perm. SWSF	Dynamic load case
Seagoing conditions									
1 (2)	Full load [4.1.3]	M_H M_H M_H				T_{SC}	50% (sag.)	100%	BSP-1P/S OST-1P/S
2 (1)	Full load [4.2.1] item a	M_{Full} M_{Full} M_{Full}				T_{SC}	50% (sag.)	100%	BSP-1P/S
3	Slack load [4.2.1] item b	M_{Full} 50% M_H M_{Full}				T_{SC}	0%	100%	BSP-1P/S
4 (3) (4)	Deepest ballast [4.2.1] item c					T_{BAL-H}	100% (hog.)	100%	FSM-2 BSR-1P/S OST-2P/S
							100% (sag.)	100%	BSP-1P/S BSR-1P/S OST-1P/S
5	Multiport 2 [4.2.2] item b	M_{Full} M_{Full}				$0.83T_{SC}$	100% (hog.)	100% (8) Max SFLC	FSM-2 HSM-2
								100% (9) Max SFLC	FSM-2 HSM-2
								100%	OST-2P/S
							100% (sag.)	100% (10) Max SFLC	HSM-1
								100%	BSP-1P/S OST-1P/S
6	Multiport 3 [4.2.2] item c	M_{Full} M_{Full}				$0.67T_{SC}$	100% (sag.)	100%	BSP-1P/S OST-1P/S
7	Multiport 3 [4.2.2] item c	M_{Full} M_{Full}				$0.67T_{SC}$	100% (sag.)	100%	BSP-1P/S OST-1P/S
8	Multiport 4 [4.2.2] item d	M_{Full}				$0.75T_{SC}$	100% (hog.)	100%	FSM-2, HSM-2 BSR-1P/S OST-2P/S
							100% (sag.)	100%	BSP-1P/S BSR-1P/S OST-1P/S
9	Multiport 4 [4.2.2] item d	M_{Full}				$0.75T_{SC}$	100% (hog.)	100%	FSM-2, HSM-2 BSR-1P/S OST-2P/S
							100% (sag.)	100%	BSP-1P/S BSR-1P/S OST-1P/S

No.	Description Req^t ref	Loading pattern	Aft	Mid	Fore	Draught	$C_{BM\text{-}LC}$: % of perm. SWBM	$C_{SF\text{-}LC}$: % of perm. SWSF	Dynamic load case
10 (2)	Alternate load partial [4.2.3] items a and b	M_{HO}+ 0.1 M_H				T_{SC}	100% (hog.)	100% (10) Max SFLC	FSM-2 HSM-2
								100%	OST-2P/S
							0%	100% (8) Max SFLC	FSM-1 HSM-1
								100% (9) Max SFLC	FSM-1 HSM-1
								100%	BSP-1P/S OST-1P/S
11	Alternate load full [4.2.3] items a and c	M_{HO}+ 0.1 M_H				T_{SC}	100% (hog.)	100% (10) Max SFLC	FSM-2 HSM-2
								100%	OST-2P/S
							0%	100% (8) Max SFLC	HSM-1
								100% (9) Max SFLC	HSM-1
								100%	BSP-1P/S
12 (2) (5) (6) (13)	Alt-block load [4.2.3] item d	M_{BLK}+ 0.1 M_H M_{BLK}+ 0.1 M_H				T_{SC}	100% (hog.)	100%	FSM-2 HSM-2 OST-2P/S
							100% (sag.)	100%	HSM-1 BSP-1P/S OST-1P/S
13 (2) (5) (6) (13)	Alt-block load [4.2.3] item d	M_{BLK}+ 0.1 M_H M_{BLK}+ 0.1 M_H				T_{SC}	100% (hog.)	100%	FSM-2 HSM-2 OST-2P/S
							100% (sag.)	100%	HSM-1 BSP-1P/S OST-1P/S
14 (7)	Heavy ballast [4.2.4]					$T_{BAL\text{-}H}$	0%	100% (10) Max SFLC	FSM-2 HSM-2
								100%	BSR-1P/S
							100% (sag.)	100% (8) Max SFLC	HSM-1
								100% (9) Max SFLC	HSM-1
								100%	BSR-1P/S
15 (7)	Heavy ballast [4.2.4]					$T_{BAL\text{-}H}$	0%	100%	BSR-1P/S
							100% (sag.)	100%	BSR-1P/S

No.	Description Req^t ref	Loading pattern Aft Mid Fore	Draught	$C_{BM\text{-}LC}$: % of perm. SWBM	$C_{SF\text{-}LC}$: % of perm. SWSF	Dynamic load case
Harbour conditions						
16 (2)	Harbour condition [4.2.5] items a and b	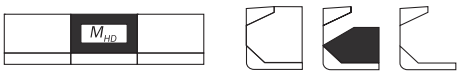	T_{H4}	100% (hog.)	100% (11) Max SFLC	N/A
					100% (12) Max SFLC	N/A
				100% (sag.)	100% (11) Max SFLC	N/A
					100% (12) Max SFLC	N/A
17	Harbour condition [4.2.5] item a	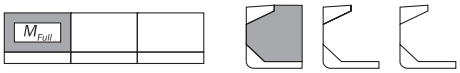	$0.67T_{SC}$	100% (hog.)	100%	N/A
				100% (sag.)	100%	N/A
18	Harbour condition [4.2.5] item a	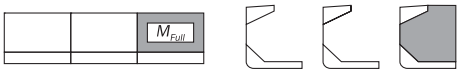	$0.67T_{SC}$	100% (hog.)	100%	N/A
				100% (sag.)	100%	N/A
19	Harbour condition [4.2.5] items a and c	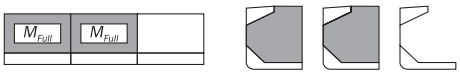	T_{H1}	100% (hog.)	100%	N/A
				100% (sag.)	100%	N/A
20	Harbour condition [4.2.5] items a and c	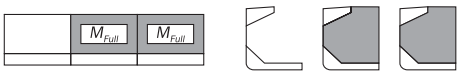	T_{H1}	100% (hog.)	100%	N/A
				100% (sag.)	100%	N/A
21 (13)	Alt-block harbour condition [4.2.3] item d	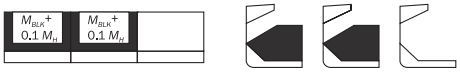	T_{H3}	100% (hog.)	100%	N/A
				100% (sag.)	100%	N/A
22 (13)	Alt-block harbour condition [4.2.3] item d		T_{H3}	100% (hog.)	100%	N/A
				100% (sag.)	100%	N/A

(1) Loading pattern no. 1 with the cargo mass M_{Full} and the maximum cargo density as defined in [4.1.4] can be analysed in lieu of this loading pattern.

(2) Maximum cargo density as defined in [4.1.4] is to be used for calculation of dry cargo pressure.

(3) In case of no ballast hold, normal ballast condition with assuming M_{SW} = 100% (hog.) is to be analysed.

(4) Position of ballast hold is to be adjusted as appropriate.

(5) This condition is only required when block loading condition is included in the loading manual.

(6) Actual still water vertical bending moment, as given in the loading manual, may be used instead of design value.

(7) This condition is to be considered for the heavy cargo hold which is assigned as ballast hold, if any.

(8) For the mid-hold where $x_{b\text{-}aft} \leq 0.5L$ and $x_{b\text{-}fwd} \geq 0.5L$, the shear force is to be adjusted to target value at aft bulkhead of the mid-hold.

(9) For the mid-hold, where $x_{b\text{-}aft} \leq 0.5L$ and $x_{b\text{-}fwd} \geq 0.5L$, the shear force is to be adjusted to target value at forward bulkhead of the mid-hold.

(10) This load combination is to be considered only for the mid-hold, where $x_{b\text{-}aft} > 0.5L$ or $x_{b\text{-}fwd} < 0.5L$.

(11) The shear force is to be adjusted to target value at aft bulkhead of the mid-hold.

(12) The shear force is to be adjusted to target value at forward bulkhead of the mid-hold.

(13) This condition is only required when block loading condition is included in the loading manual.

Table 14 : FE Load combinations applicable for BC-B & BC-C - midship cargo hold region

No.	Description Req^t ref	Loading pattern	Aft	Mid	Fore	Draught	$C_{BM\text{-}LC}$: % of perm. SWBM	$C_{SF\text{-}LC}$: % of perm. SWSF	Dynamic load case
Seagoing conditions									
1 (1) (3)	Full load [4.1.3]	M_H M_H M_H				T_{SC}	50% (sag.)	100%	BSP-1P/S OST-1P/S
2 (2)	Full load [4.2.1] item a	M_{Full} M_{Full} M_{Full}				T_{SC}	50% (sag.)	100%	BSP-1P/S OST-1P/S
3	Slack load [4.2.1] item b	M_{Full} 50% M_H M_{Full}				T_{SC}	0%	100%	BSP-1P/S
4 (4) (5)	Deepest ballast [4.2.1] item c					$T_{BAL\text{-}H}$	100% (hog.)	100%	FSM-2, BSR-1P/S OST-2P/S
							100% (sag.)	100%	BSP-1P/S BSR-1P/S OST-1P/S
5	Multiport 2 [4.2.2] item b	M_{Full} M_{Full}				$0.83T_{SC}$	100% (hog.)	100% (7) Max SFLC	FSM-2 HSM-2
								100% (8) Max SFLC	FSM-2 HSM-2
								100%	OST-2P/S
							100% (sag.)	100% (9) Max SFLC	HSM-1
								100%	BSP-1P/S OST-1P/S
6	Multiport 3 [4.2.2] item c	M_{Full} M_{Full}				$0.67T_{SC}$	100% (sag.)	100%	BSP-1P/S OST-1P/S
7	Multiport 3 [4.2.2] item c	M_{Full} M_{Full}				$0.67T_{SC}$	100% (sag.)	100%	BSP-1P/S OST-1P/S
8	Multiport 4 [4.2.2] item d	M_{Full}				$0.75T_{SC}$	100% (hog.)	100%	FSM-2 HSM-2 BSR-1P/S OST-2P/S
							100% (sag.)	100%	BSP-1P/S BSR-1P/S OST-1P/S

No.	Description Req^t ref	Loading pattern	Aft	Mid	Fore	Draught	$C_{BM\text{-}LC}$: % of perm. SWBM	$C_{SF\text{-}LC}$: % of perm. SWSF	Dynamic load case
9	Multiport 4 [4.2.2] item d	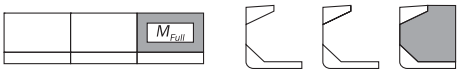				$0.75T_{SC}$	100% (hog.)	100%	FSM-2 HSM-2 BSR-1P/S OST-2P/S
							100% (sag.)	100%	BSP-1P/S BSR-1P/S OST-1P/S
10 (6)	Heavy ballast [4.2.4]	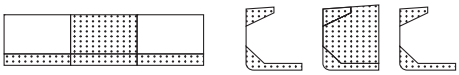				$T_{BAL\text{-}H}$	0%	100% (9) Max SFLC	FSM-2 HSM-2
								100%	BSR-1P/S
							100% (sag.)	100% (7) Max SFLC	HSM-1
								100% (8) Max SFLC	HSM-1
								100%	BSR-1P/S
11 (6)	Heavy ballast [4.2.4]	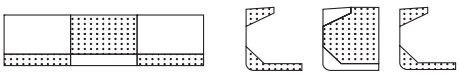				$T_{BAL\text{-}H}$	0%	100%	BSR-1P/S
							100% (sag.)	100%	BSR-1P/S
Harbour conditions									
12	Harbour condition [4.2.5] item a	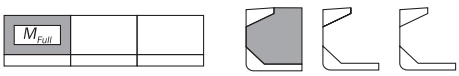				$0.67T_{SC}$	100% (hog.)	100%	N/A
							100% (sag.)	100%	N/A
13	Harbour condition [4.2.5] item a	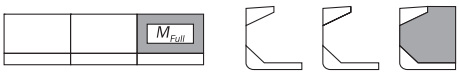				$0.67T_{SC}$	100% (hog.)	100%	N/A
							100% (sag.)	100%	N/A
14	Harbour condition [4.2.5] items a and c	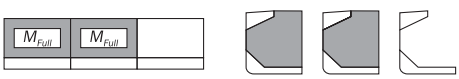				T_{H1}	100% (hog.)	100%	N/A
							100% (sag.)	100%	N/A
15	Harbour condition [4.2.5] items a and c	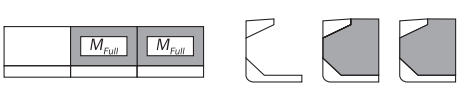				T_{H1}	100% (hog.)	100%	N/A
							100% (sag.)	100%	N/A

No.	Description Req^t ref	Loading pattern	Aft	Mid	Fore	Draught	$C_{BM\text{-}LC}$: % of perm. SWBM	$C_{SF\text{-}LC}$: % of perm. SWSF	Dynamic load case
16	Harbour condition [4.2.5] items a and b	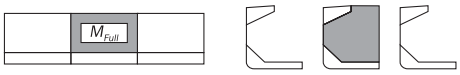				T_{H2}	100% (hog.)	100% (10) Max SFLC	N/A
								100% (11) Max SFLC	N/A
							100% (sag.)	100% (10) Max SFLC	N/A
								100% (11) Max SFLC	N/A

(1) Applicable to BC-B only.

(2) For BC-B ships, the loading pattern no. 1 with the cargo mass M_{Full} and the maximum cargo density as defined in [4.1.3] can be analysed in lieu of this loading pattern.

(3) Maximum cargo density as defined in [4.1.3] is to be used for calculation of dry cargo pressure.

(4) In case of no ballast hold, normal ballast condition with assuming M_{SW} = 100% (hog.) is to be analysed.

(5) Position of ballast hold is to be adjusted as appropriate.

(6) This condition is to be considered for the cargo hold which is assigned as ballast hold, if any.

(7) For the mid-hold where $x_{b\text{-}aft} \leq 0.5L$ and $x_{b\text{-}fwd} \geq 0.5L$, the shear force is to be adjusted to target value at aft bulkhead of the mid-hold.

(8) For the mid-hold where $x_{b\text{-}aft} \leq 0.5L$ and $x_{b\text{-}fwd} \geq 0.5L$, the shear force is to be adjusted to target value at forward bulkhead of the mid-hold.

(9) This load combination is to be considered only for the mid-hold where $x_{b\text{-}aft} > 0.5L$ or $x_{b\text{-}fwd} < 0.5L$.

(10) The shear force is to be adjusted to target value at aft bulkhead of the mid-hold.

(11) The shear force is to be adjusted to target value at forward bulkhead of the mid-hold.

Table 15 : FE Load combinations applicable to empty hold in alternate condition of BC-A (EA) - outside midship cargo hold region

No.	Description Req[t] ref	Loading pattern	Aft	Mid	Fore	Draught	C_{BM-LC} : % of perm. SWBM	C_{SF-LC} : % of perm. SWSF	Dynamic load case	
									aft region	forward region
Seagoing conditions										
1 (2)	Full load [4.1.3]	M_H M_H M_H				T_{SC}	50% (sag.)	100%	BSP-1P/S OST-1P/S OSA-1P/S	HSM-1 BSP-1P/S OST-1P/S OSA-2P/S
2 (1)	Full load [4.2.1] item a	M_{Full} M_{Full} M_{Full}				T_{SC}	50% (sag.)	100%	BSP-1P/S	BSP-1P/S
3	Slack load [4.2.1] item b	50% M_H M_{Full} M_{Full}				T_{SC}	0%	100%	BSP-1P/S	BSP-1P/S
4	Slack load [4.2.1] item b	M_{Full} M_{Full} 50% M_H				T_{SC}	0%	100%	BSP-1P/S	BSP-1P/S
5 (3) (4)	Deepest ballast [4.2.1] item c					T_{BAL-H}	100% (hog.)	100%	HSM-2 HSA-2 BSR-1P/S OST-2P/S	FSM-2 BSP-1P/S BSR-1P/S OSA-2P/S
							100% (sag.) (10)	100%	HSM-1 BSP-1P/S	HSM-1 BSP-1P/S BSR-1P/S OSA-2P/S
6 (5)	Multiport 3 [4.2.2] item c	M_{Full} M_{Full}				$0.67T_{SC}$	100% (sag.)	100%	HSM-1 OST-1P/S	HSM-1 OST-1P/S
7 (5)	Multiport 3 [4.2.2] item c	M_{Full} M_{Full}				$0.67T_{SC}$	100% (sag.)	100%	HSM-1 OST-1P/S	BSP-1P/S OSA-2P/S
8 (5)	Multiport 4 [4.2.2] item d	M_{Full}				$0.75T_{SC}$	100% (hog.)	100%	HSM-2 OST-2P/S	HSM-2 BSR-1P/S OST-2P/S
							100% (sag.)	100%	HSM-1 FSM-1 BSP-1P/S OST-1P/S	HSM-1 BSP-1P/S OST-1P/S
9 (5)	Multiport 4 [4.2.2] item d	M_{Full}				$0.75T_{SC}$	100% (hog.)	100%	HSM-2 OST-2P/S	HSM-2 OST-2P/S
							100% (sag.)	100%	HSM-1 FSM-1 BSP-1P/S OST-1P/S	HSM-1 BSP-1P/S BSR-1P/S OST-1P/S

No.	Description Req[t] ref	Loading pattern	Aft	Mid	Fore	Draught	$C_{BM\text{-}LC}$: % of perm. SWBM	$C_{SF\text{-}LC}$: % of perm. SWSF	Dynamic load case	
									aft region	forward region
10 (2)	Alternate load partial [4.2.3] items a and b	M_{HD} + 0.1 M_H	M_{HD} + 0.1 M_H			T_{SC}	100% (hog.)	100% Max SFLC	FSM-2 HSM-2	FSM-2 HSM-2
								100%	BSP-1P/S OST-2P/S OSA-1P/S	BSP-1P/S BSR-1P/S OST-2P/S OSA-2P/S
							0%	100%	BSP-1P/S OST-2P/S OSA-1P/S	BSP-1P/S OST-2P/S
								100% Max SFLC	HSM-1 FSM-1	HSM-1 FSM-1
11	Alternate load full [4.2.3] items a and c	M_{HD} + 0.1 M_H	M_{HD} + 0.1 M_H			T_{SC}	100% (hog.)	100% Max SFLC	HSM-2 FSM-2	HSM-2 FSM-2
								100%	BSP-1P/S OST-2P/S	BSP-1P/S BSR-1P/S OST-2P/S OSA-2P/S
							0%	100%	BSP-1P/S	HSA-1 BSP-1P/S
								100% Max SFLC	HSM-1 FSM-1	HSM-1 FSM-1
12 (2) (6) (7) (11)	Alt-block load [4.2.3] item d	M_{BLK} + 0.1 M_H	M_{BLK} + 0.1 M_H			T_{SC}	100% (hog.)	100%	FSM-2 BSP-1P/S OST-2P/S	FSM-2 BSP-1P/S OSA-2P/S
							100% (sag.)	100%	HSM-1 BSP-1P/S OST-1P/S	HSM-1 BSP-1P/S OSA-2P/S
13 (2) (6) (7) (11)	Alt-block load [4.2.3] item d	M_{BLK} + 0.1 M_H	M_{BLK} + 0.1 M_H			T_{SC}	100% (hog.)	100%	FSM-2 BSP-1P/S OST-2P/S	FSM-2 BSP-1P/S OSA-2P/S OST-1P/S
							100% (sag.)	100%	HSM-1 BSP-1P/S OST-1P/S	HSM-1 BSP-1P/S OSA-2P/S

No.	Description Req^t ref	Loading pattern Aft Mid Fore	Draught	$C_{BM\text{-}LC}$: % of perm. SWBM	$C_{SF\text{-}LC}$: % of perm. SWSF	Dynamic load case aft region	Dynamic load case forward region
Harbour conditions							
14	Harbour condition [4.2.5] items a and c	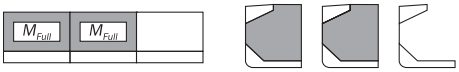	T_{H1}	100% (hog.)	100%	N/A	N/A
				100% (sag.)	100%	N/A	N/A
15	Harbour condition [4.2.5] items a and c	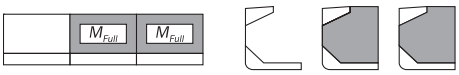	T_{H1}	100% (hog.)	100%	N/A	N/A
				100% (sag.)	100%	N/A	N/A
16	Harbour condition [4.2.5] items a and b	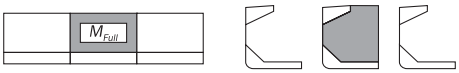	T_{H2}	100% (hog.)	100% (8) Max SFLC	N/A	N/A
					100% (9) Max SFLC	N/A	N/A
				100% (sag.)	100% (8) Max SFLC	N/A	N/A
					100% (9) Max SFLC	N/A	N/A
17 (11)	Alt-block harbour condition [4.2.3] item d		T_{H3}	100% (hog.)	100%	N/A	N/A
				100% (sag.)	100%	N/A	N/A
18 (11)	Alt-block harbour condition [4.2.3] item d		T_{H3}	100% (hog.)	100%	N/A	N/A
				100% (sag.)	100%	N/A	N/A

(1) Loading pattern no. 1 with the cargo mass M_{Full} and the maximum cargo density as defined in [4.1.4] can be analysed in lieu of this loading pattern.
(2) Maximum cargo density as defined in [4.1.4] is to be used for calculation of dry cargo pressure.
(3) In case of no ballast hold, normal ballast condition with assuming M_{SW} = 100% (hog.) is to be analysed.
(4) Position of ballast hold is to be adjusted as appropriate.
(5) This condition is not required when {no MP} notation is assigned.
(6) This condition is only required when this loading condition is included in the loading manual.
(7) Actual still water vertical bending moment, as given in the loading manual, may be used instead of design value.
(8) The shear force is to be adjusted to target value at aft bulkhead of the mid-hold.
(9) The shear force is to be adjusted to target value at forward bulkhead of the mid-hold.
(10) This loading condition is required only when the ballast hold is located inside the cargo hold model.
(11) This condition is only required when block loading condition is included in the loading manual.

Table 16 : FE Load combinations applicable to loaded hold in alternate condition of BC-A (FA) - outside midship cargo hold region

No.	Description Req[t] ref	Loading pattern	Aft	Mid	Fore	Draught	$C_{BM\text{-}LC}$: % of perm. SWBM	$C_{SF\text{-}LC}$: % of perm. SWSF	Dynamic load case	
									Aft Region	Forward region
Seagoing conditions										
1 (2)	Full load [4.1.3]	M_H M_H M_H				T_{SC}	50% (sag.)	100%	HSM-1 BSP-1P/S OSA-1P/S	HSM-1 HSA-1 BSP-1P/S OSA-2P/S
2 (1)	Full load [4.2.1] item a	M_{Full} M_{Full} M_{Full}				T_{SC}	50% (sag.)	100%	N/A	BSP-1P/S OSA-2P/S
3	Slack load [4.2.1] item b	M_{Full} 50% M_H M_{Full}				T_{SC}	0%	100%	HSM-2 HSA-1 BSP-1P/S OSA-1P/S	HSM-1 HSA-1 FSM-2 BSP-1P/S
4 (3) (4)	Deepest ballast [4.2.1] item c					$T_{BAL\text{-}H}$	100% (hog.)	100%	HSM-2 FSM-2 OST-2P/S	HSM-2
							100% (sag.)	100%	HSM-1 FSM-1 OST-1P/S OSA-2P/S	HSM-1 HSA-1 FSM-1 BSP-1P/S OSA-2P/S
5	Multiport 2 [4.2.2] item b	M_{Full} M_{Full}				$0.83T_{SC}$	100% (hog.)	100% Max SFLC	HSM-2	N/A
								100%	BSP-1P/S	BSP-1P/S
							100% (sag.)	100%	BSP-1P/S	HSA-1 BSR-1P/S
								100% Max SFLC	HSM-1	N/A
6	Multiport 3 [4.2.2] item c	M_{Full} M_{Full}				$0.67T_{SC}$	100% (sag.)	100%	BSP-1P/S BSR-1P/S	HSM-1 HSA-1 BSP-1P/S OSA-2P/S
7	Multiport 3 [4.2.2] item c	M_{Full} M_{Full}				$0.67T_{SC}$	100% (sag.)	100%	HSM-1 BSP-1P/S OST-1P/S	HSM-1

No.	Description Req^t ref	Loading pattern	Aft	Mid	Fore	Draught	$C_{BM\text{-}LC}$: % of perm. SWBM	$C_{SF\text{-}LC}$: % of perm. SWSF	Dynamic load case	
									Aft Region	Forward region
8	Multiport 4 [4.2.2] item d	M_{Full}				$0.75T_{SC}$	100% (hog.)	100%	HSM-2 FSM-2 BSR-1P/S BSP-1P/S OSA-1P/S OST-2P/S	FSM-2 OSA-2P/S
							100% (sag.)	100%	BSR-1P/S BSP-1P/S OST-1P/S	HSM-1 HSA-1 BSP-1P/S OSA-2P/S
9	Multiport 4 [4.2.2] item d	M_{Full}				$0.75T_{SC}$	100% (hog.)	100%	HSM-2 BSR-1P/S OST-2P/S	FSM-2 BSR-1P/S
							100% (sag.)	100%	HSM-1 FSM-1 BSP-1P/S BSR-1P/S OST-1P/S	HSM-1 HSA-1 BSP-1P/S OST-1P/S
10 (2)	Alternate load partial [4.2.3] items a and b	M_{HO} + 0.1 M_H				T_{SC}	100% (hog.)	100%	HSA-2 BSP-1P/S OSA-1P/S OST-2P/S	BSP-1P/S OSA-2P/S OST-2P/S
								100% Max SFLC	HSM-2 FSM-2	FSM-2
							0%	100% Max SFLC	HSM-1 FSM-1	HSM-1
								100%	BSP-1P/S OSA-1P/S	BSP-1P/S OSA-1P/S OSA-2P/S
11	Alternate load full [4.2.3] items a and c	M_{HO} + 0.1 M_H				T_{SC}	100% (hog.)	100%	HSA-2 BSP-1P/S OSA-1P/S	OSA-1P/S OSA-2P/S
								100% Max SFLC	HSM-2	FSM-2 HSM-2
							0%	100% Max SFLC	HSM-1	HSM-1
								100%	BSP-1P/S OSA-1P/S	OSA-1P/S OST-2P/S

No.	Description Req^t ref	Loading pattern	Aft	Mid	Fore	Draught	$C_{BM\text{-}LC}$: % of perm. SWBM	$C_{SF\text{-}LC}$: % of perm. SWSF	Dynamic load case	
									Aft Region	Forward region
12 (2) (5) (6) (9)	Alt-block load [4.2.3] item d	M_{BLK} + 0.1 M_H / M_{BLK} + 0.1 M_H				T_{SC}	100% (hog.)	100%	HSA-2 FSM-2 BSP-1P/S OSA-1P/S OST-2P/S	HSM-2 FSM-2 BSP-1P/S OSA-2P/S
							100% (sag.)	100%	HSM-1 BSP-1P/S OSA-1P/S OST-1P/S	HSM-1 BSP-1P/S OSA-2P/S
13 (2) (5) (6) (9)	Alt-block load [4.2.3] item d	M_{BLK} + 0.1 M_H / M_{BLK} + 0.1 M_H				T_{SC}	100% (hog.)	100%	FSM-2 BSP-1P/S	HSM-2 FSM-2 BSP-1P/S OSA-2P/S OST-2P/S
							100% (sag.)	100%	HSM-1 HSA-1 FSM-1 BSP-1P/S OST-1P/S	HSM-1 HSA-1 BSP-1P/S OSA-2P/S
Harbour conditions										
14 (2)	Harbour condition [4.2.5] items a and b	M_{HD}				T_{H4}	100% (hog.)	100% (7) Max SFLC	N/A	N/A
								100% (8) Max SFLC	N/A	N/A
							100% (sag.)	100% (7) Max SFLC	N/A	N/A
								100% (8) Max SFLC	N/A	N/A
15	Harbour condition [4.2.5] item a	M_{Full}				0.67T_{SC}	100% (hog.)	100%	N/A	N/A
							100% (sag.)	100%	N/A	N/A
16	Harbour condition [4.2.5] item a	M_{Full}				0.67T_{SC}	100% (hog.)	100%	N/A	N/A
							100% (sag.)	100%	N/A	N/A
17	Harbour condition [4.2.5] items a and c	M_{Full} / M_{Full}				T_{H1}	100% (hog.)	100%	N/A	N/A
							100% (sag.)	100%	N/A	N/A

No.	Description Req^t ref	Loading pattern	Aft	Mid	Fore	Draught	$C_{BM\text{-}LC}$: % of perm. SWBM	$C_{SF\text{-}LC}$: % of perm. SWSF	Dynamic load case	
									Aft Region	Forward region
18	Harbour condition [4.2.5] items a and c	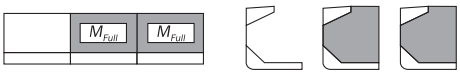				T_{H1}	100% (hog.)	100%	N/A	N/A
							100% (sag.)	100%	N/A	N/A
19 (9)	Alt-block harbour condition [4.2.3] item d	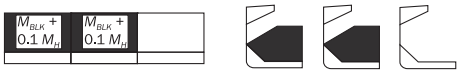				T_{H3}	100% (hog.)	100%	N/A	N/A
							100% (sag.)	100%	N/A	N/A
20 (9)	Alt-block harbour condition [4.2.3] item d					T_{H3}	100% (hog.)	100%	N/A	N/A
							100% (sag.)	100%	N/A	N/A

(1) Loading pattern No. 1 with the cargo mass M_{Full} and the maximum cargo density as defined in [4.1.4] can be analysed in lieu of this loading pattern.

(2) Maximum cargo density as defined in [4.1.4] is to be used for calculation of dry cargo pressure.

(3) In case of no ballast hold, normal ballast condition with assuming M_{SW} = 100% (hog.) is to be analysed.

(4) Position of ballast hold is to be adjusted as appropriate.

(5) This condition is only required when this loading condition is included in the loading manual.

(6) Actual still water vertical bending moment, as given in the loading manual, may be used instead of design value.

(7) The shear force is to be adjusted to target value at aft bulkhead of the mid-hold.

(8) The shear force is to be adjusted to target value at forward bulkhead of the mid-hold.

(9) This condition is only required when block loading condition is included in the loading manual.

Table 17 : FE Load combinations applicable for BC-B & BC-C - outside midship cargo hold region

No.	Description Req^t ref	Loading pattern	Aft	Mid	Fore	Draught	C_{BM-LC} : % of perm. SWBM	C_{SF-LC} : % of perm. SWSF	Dynamic load case	
									aft region	forward region
Seagoing conditions										
1 (1) (3)	Full load [4.1.3]	M_H M_H M_H				T_{SC}	50% (sag.)	100%	HSM-1 FSM-1 BSP-1P/S OSA-1P/S OST-1P/S OST-2P/S	HSM-1 HSA-1 BSP-1P/S OSA-2P/S
2 (2)	Full load [4.2.1] item a	M_{Full} M_{Full} M_{Full}				T_{SC}	50% (sag.)	100%	HSM-1 FSM-1 BSP-1P/S OSA-1P/S OST-1P/S OST-2P/S	HSM-1 HSA-1 BSP-1P/S OSA-1P/S
3	Slack load [4.2.1] item b	M_{Full} 50% M_H M_{Full}				T_{SC}	0%	100%	HSM-1 HSM-2 HSA-1 FSM-2 BSP-1P/S OSA-1P/S OST-2P/S	HSM-1 HSA-1 FSM-2 BSP-1P/S OST-2P/S
4 (4) (5)	Deepest ballast [4.2.1] item c					T_{BAL-H}	100% (hog.)	100%	HSM-2 FSM-2 OST-2P/S	HSM-2
							100% (sag.)	100%	HSM-1 FSM-1 OSA-2P/S OST-1P/S	HSM-1 HSA-1 FSM-1 BSP-1P/S OSA-2P/S
5	Multiport 2 [4.2.2] item b	M_{Full} M_{Full}				$0.83T_{SC}$	100% (hog.)	100% Max SFLC	HSM-2	N/A
								100%	BSP-1P/S	BSP-1P/S
							100% (sag.)	100%	BSP-1P/S	HSA-1 BSR-1P/S
								100% Max SFLC	HSM-1	N/A
6	Multiport 3 [4.2.2] item c	M_{Full} M_{Full}				$0.67T_{SC}$	100% (sag.)	100%	BSP-1P/S BSR-1P/S	HSM-1 HSA-1 BSP-1P/S OSA-2P/S

No.	Description Req^t ref	Loading pattern	Aft	Mid	Fore	Draught	$C_{BM\text{-}LC}$: % of perm. SWBM	$C_{SF\text{-}LC}$: % of perm. SWSF	Dynamic load case	
									aft region	forward region
7	Multiport 3 [4.2.2] item c	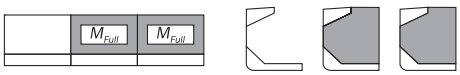				$0.67T_{SC}$	100% (sag.)	100%	HSM-1 FSM-1 BSP-1P/S OST-1P/S	HSM-1 BSP-1P/S
8	Multiport 4 [4.2.2] item d	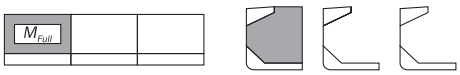				$0.75T_{SC}$	100% (hog.)	100%	HSM-2 FSM-2 BSP-1P/S BSR-1P/S OSA-1P/S OST-2P/S	HSM-2 FSM-2 OSA-2P/S
							100% (sag.)	100%	BSP-1P/S BSR-1P/S OST-1P/S	HSM-1 HSA-1 BSP-1P/S OSA-2P/S
9	Multiport 4 [4.2.2] item d	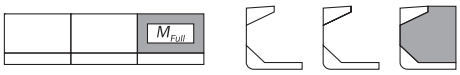				$0.75T_{SC}$	100% (hog.)	100%	HSM-2 BSR-1P/S OST-2P/S	FSM-2 BSR-1P/S
							100% (sag.)	100%	HSM-1 FSM-1 BSP-1P/S BSR-1P/S OST-1P/S	HSM-1 HSA-1 BSP-1P/S OST-1P/S
Harbour conditions										
10	Harbour condition [4.2.5] item a	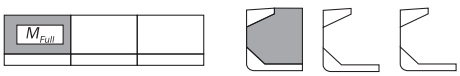				$0.67T_{SC}$	100% (hog.)	100%	N/A	N/A
							100% (sag.)	100%	N/A	N/A
11	Harbour condition [4.2.5] item a	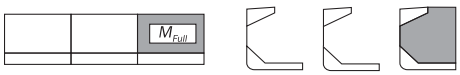				$0.67T_{SC}$	100% (hog.)	100%	N/A	N/A
							100% (sag.)	100%	N/A	N/A
12	Harbour condition[4.2.5] items a and c	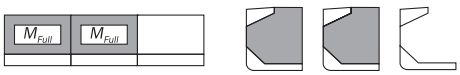				T_{H1}	100% (hog.)	100%	N/A	N/A
							100% (sag.)	100%	N/A	N/A
13	Harbour condition [4.2.5] items a and c	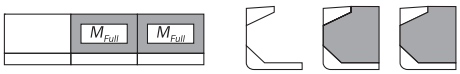				T_{H1}	100% (hog.)	100%	N/A	N/A
							100% (sag.)	100%	N/A	N/A

No.	Description Req^t ref	Loading pattern	Aft	Mid	Fore	Draught	C_{BM-LC} : % of perm. SWBM	C_{SF-LC} : % of perm. SWSF	Dynamic load case	
									aft region	forward region
14	Harbour condition [4.2.5] items a and b	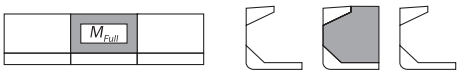				T_{H2}	100% (hog.)	100% (6) Max SFLC	N/A	N/A
								100% (7) Max SFLC	N/A	N/A
							100% (sag.)	100% (6) Max SFLC	N/A	N/A
								100% (7) Max SFLC	N/A	N/A

(1) Applicable to BC-B only.

(2) For BC-B ships, the loading pattern no. 1 with the cargo mass M_{Full} and the maximum cargo density as defined in [4.1.3]can be analysed in lieu of this loading pattern.

(3) Maximum cargo density as defined in [4.1.3] is to be used for calculation of dry cargo pressure.

(4) In case of no ballast hold, normal ballast condition with assuming M_{SW} = 100% (hog.) is to be analysed.

(5) Position of ballast hold is to be adjusted as appropriate.

(6) The shear force is to be adjusted to target value at aft bulkhead of the mid-hold.

(7) The shear force is to be adjusted to target value at forward bulkhead of the mid-hold.

Table 18 : FE Load combinations applicable to loaded hold in alternate condition of BC-A (FA) - aftmost cargo hold

No.	Description Req^t ref	Loading pattern	Aft	Mid	Fore	Draught	C_{BM-LC} : % of perm. SWBM	C_{SF-LC} : % of perm. SWSF	Dynamic load case
Seagoing conditions									
1 (2)	Full load [4.1.3]	M_H M_H				T_{SC}	80% (sag.)	100%	FSM-1 BSP-1P/S OST-1P/S
2 (1)	Full load [4.2.1] item a	M_{Full} M_{Full}				T_{SC}	80% (sag.)	100%	FSM-1
3	Slack load [4.2.1] item b	50% M_H M_{Full}				T_{SC}	100% (sag.)	100%	FSM-1 BSP-1P/S OST-1P/S
4 (3) (4)	Deepest ballast [4.2.1] item c					T_{BAL-H}	100% (hog.)	100%	HSM-2, FSM-1 BSP-1P/S BSR-1P/S OST-1P/S OST-2P/S OSA-1P/S
5	Multiport 2 [4.2.2] item b	M_{Full}				0.83T_{SC}	30% (hog.)	100%	FSM-1, OSA-1P/S
							30% (sag.)	100%	FSM-1 BSP-1P/S
6	Multiport 3 [4.2.2] item c	M_{Full} M_{Full}				0.67T_{SC}	50% (sag.)	100%	BSP-1P/S OST-1P/S
7 (2)	Alternate load partial [4.2.3] items a and b	M_{HD}+ 0.1 M_H				T_{SC}	50% (hog.)	100% Max SFLC	HSM-2,
								100%	BSP-1P/S OSA-1P/S
							0%	100% Max SFLC	FSM-1
								100%	BSP-1P/S OST-1P/S OSA-1P/S
8	Alternate load full [4.2.3] items a and c	M_{HD}+ 0.1 M_H				T_{SC}	50% (hog.)	100% Max SFLC	HSM-2, FSM-2
								100%	BSP-1P/S, OSA-1P/S
							0%	100% Max SFLC	HSM-1
								100%	BSP-1P/S OST-1P/S OSA-1P/S

No.	Description Req[t] ref	Loading pattern	Aft	Mid	Fore	Draught	$C_{BM\text{-}LC}$: % of perm. SWBM	$C_{SF\text{-}LC}$: % of perm. SWSF	Dynamic load case
9 (2) (5) (6)	Alt-block load [4.2.3] item d	M_{BLK}+ 0.1 M_H / M_{BLK}+ 0.1 M_H				T_{SC}	50% (sag.)	100%	BSP-1P/S OST-1P/S
Harbour conditions									
10 (2)	Harbour condition [4.2.5] items a and b	M_{HD}				T_{H4}	100% (hog.)	100%	N/A
							50% (hog.)	100% (7) Max SFLC	N/A
								100% (8) Max SFLC	N/A
11	Harbour condition [4.2.5] item a	M_{Full}				0.67T_{SC}	50% (hog.)	100%	N/A
							100% (sag.)	100%	N/A
12	Harbour condition [4.2.5] items a and c	M_{Full} / M_{Full}				T_{H1}	50% (hog.)	100%	N/A
							50% (sag.)	100%	N/A
13 (9)	Alt-block harbour condition [4.2.3] item d	M_{BLK}+ 0.1 M_H / M_{BLK}+ 0.1 M_H				T_{H3}	50% (hog.)	100%	N/A
							50% (sag.)	100%	N/A

(1) Loading pattern no. 1 with the cargo mass M_H and the maximum cargo density as defined in [4.1.4] can be analysed in lieu of this loading pattern.
(2) Maximum cargo density as defined in [4.1.4] is to be used for calculation of dry cargo pressure.
(3) In case of no ballast hold, normal ballast condition with assuming M_{SW} = 100% (hog.) is to be analysed.
(4) Position of ballast hold is to be adjusted as appropriate.
(5) This condition is only required when this loading condition is included in the loading manual.
(6) Actual still water vertical bending moment, as given in the loading manual, may be used instead of design value.
(7) The shear force is to be adjusted to target value at aft bulkhead of the mid-hold.
(8) The shear force is to be adjusted to target value at forward bulkhead of the mid-hold.
(9) This condition is only required when block loading condition is included in the loading manual.

Table 19 : FE Load combinations applicable for BC-B & BC-C - aftmost cargo hold

No.	Description Req^t ref	Loading pattern	Aft	Mid	Fore	Draught	C_{BM-LC} : % of perm. SWBM	C_{SF-LC} : % of perm. SWSF	Dynamic load case
Seagoing conditions									
1 (1) (3)	Full load [4.1.3]	M_H M_H				T_{SC}	80% (sag.)	100%	FSM-1 BSP-1P/S OST-1P/S OSA-1P/S
2 (2)	Full load [4.2.1] item a	M_{Full} M_{Full}				T_{SC}	80% (sag.)	100%	FSM-1 BSP-1P/S OST-1P/S
3	Slack load [4.2.1] item b	50% M_H M_{Full}				T_{SC}	100% (sag.)	100%	FSM-1 BSP-1P/S OST-1P/S
4 (4) (5)	Deepest ballast [4.2.1] item c					T_{BAL-H}	100% (hog.)	100%	HSM-2, FSM-1 BSP-1P/S BSR-1P/S OST-1P/S OST-2P/S OSA-1P/S
5	Multiport 2 [4.2.2] item b	M_{Full}				$0.83T_{SC}$	30% (hog.)	100%	FSM-1 BSR-1P/S OSA-1P/S
							30% (sag.)	100%	FSM-1, OST-1P/S
6	Multiport 3 [4.2.2] item a	M_{Full}				$0.67T_{SC}$	60% (hog.)	100%	BSP-1P/S
								100% Max SFLC	HSM-2
							0%	100% Max SFLC	HSM-1
7	Multiport 3 [4.2.2] item c	M_{Full} M_{Full}				$0.67T_{SC}$	50% (sag.)	100%	BSP-1P/S OST-1P/S
Harbour conditions									
8	Harbour condition [4.2.5] items a and b	M_{Full}				T_{H2}	100% (hog.)	100%	N/A
							50% (hog.)	100% (6) Max SFLC	N/A
								100% (7) Max SFLC	N/A

No.	Description Req^t ref	Loading pattern	Aft	Mid	Fore	Draught	$C_{BM\text{-}LC}$: % of perm. SWBM	$C_{SF\text{-}LC}$: % of perm. SWSF	Dynamic load case
9	Harbour condition [4.2.5] item a					$0.67T_{SC}$	50% (hog.)	100%	N/A
							100% (sag.)	100%	N/A
10	Harbour condition [4.2.5] items a and c					T_{H1}	50% (hog.)	100%	N/A
							50% (sag.)	100%	N/A

(1) Applicable to BC-B only.

(2) For BC-B ships, the loading pattern no. 1 with the cargo mass M_{Full} and the maximum cargo density as defined in [4.1.3] can be analysed in lieu of this loading pattern.

(3) Maximum cargo density as defined in [4.1.3] is to be used for calculation of dry cargo pressure.

(4) In case of no ballast hold, normal ballast condition with assuming M_{SW} = 100% (hog.) is to be analysed.

(5) Position of ballast hold is to be adjusted as appropriate.

(6) The shear force is to be adjusted to target value at aft bulkhead of the mid-hold.

(7) The shear force is to be adjusted to target value at forward bulkhead of the mid-hold

Table 20 : FE Load combinations applicable to loaded hold in alternate condition of BC-A (FA) - foremost cargo hold

No.	Description Req^t ref	Loading pattern	Aft	Mid	Fore	Draught	C_{BM-LC} : % of perm. SWBM	C_{SF-LC} : % of perm. SWSF	Dynamic load case
Seagoing conditions									
1 (2)	Full load [4.1.3]	M_H M_H				T_{SC}	60% (sag.)	100%	HSM-1 BSP-1P/S OST-1P/S OSA-2P/S
2 (1)	Full load [4.2.1] item a	M_{Full} M_{Full}				T_{SC}	60% (sag.)	100%	HSM-1 BSP-1P/S OSA-2P/S
3	Slack load [4.2.1] item b	M_{Full} 50% M_H				T_{SC}	100% (sag.)	100%	HSM-1 BSP-1P/S OSA-2P/S
4 (3) (4)	Deepest ballast [4.2.1] item c					T_{BAL-H}	100% (hog.)	100%	HSM-1, HSM-2 BSP-1P/S BSR-1P/S OSA-2P/S
5	Multiport 2 [4.2.2] item b	M_{Full}				$0.83T_{SC}$	60% (sag.)	100%	HSM-1, FSM-1 BSP-1P/S OSA-2P/S
6	Multiport 3 [4.2.2] item c	M_{Full} M_{Full}				$0.67T_{SC}$	50% (sag.)	100%	HSM-1 BSP-1P/S OSA-2P/S
7	Multiport 3 [4.2.2] item a	M_{Full}				$0.67T_{SC}$	60% (hog.)	100%	FSM-2
8 (2)	Alternate load partial [4.2.3] items a and b	M_{H0}+ 0.1 M_H				T_{SC}	60% (hog.)	100%	BSP-1P/S OST-2P/S OSA-2P/S
								100% Max SFLC	HSM-2
							0%	100% Max SFLC	HSM-1
								100%	BSP-1P/S OSA-2P/S
9	Alternate load full [4.2.3] items a and c	M_{H0}+ 0.1 M_H				T_{SC}	60% (hog.)	100%	BSP-1P/S OST-2P/S OSA-2P/S
								100% Max SFLC	HSM-2
							0%	100% Max SFLC	HSM-1
								100%	BSP-1P/S OSA-2P/S

No.	Description Req^t ref	Loading pattern	Aft	Mid	Fore	Draught	$C_{BM\text{-}LC}$: % of perm. SWBM	$C_{SF\text{-}LC}$: % of perm. SWSF	Dynamic load case
10 (2) (5) (6) (9)	Alt-block load [4.2.3] item d	M_{BLK}+ 0.1 M_H / M_{BLK}+ 0.1 M_H				T_{SC}	50% (sag.)	100%	HSM-1 BSP-1P/S OSA-2P/S
Harbour conditions									
11 (2)	Harbour condition [4.2.5] items a and b	M_{HD}				T_{H4}	100% (hog.)	100%	N/A
							50% (hog.)	100% (7) Max SFLC	N/A
								100% (8) Max SFLC	N/A
12	Harbour condition [4.2.5] item a	M_{Full}				$0.67T_{SC}$	100% (sag.)	100%	N/A
13	Harbour condition [4.2.5] items a and c	M_{Full} / M_{Full}				T_{H1}	50% (hog.)	100%	N/A
14 (9)	Alt-block harbour condition [4.2.3] item d	M_{BLK}+ 0.1 M_H / M_{BLK}+ 0.1 M_H				T_{H3}	50% (hog.)	100%	N/A

(1) Loading pattern no. 1 with the cargo mass M_{Full} and the maximum cargo density as defined in [4.1.4] can be analysed in lieu of this loading pattern.
(2) Maximum cargo density as defined in [4.1.4] is to be used for calculation of dry cargo pressure.
(3) In case of no ballast hold, normal ballast condition with assuming M_{SW} = 100% (hog.) is to be analysed.
(4) Position of ballast hold is to be adjusted as appropriate.
(5) This condition is only required when this loading condition is included in the loading manual.
(6) Actual still water vertical bending moment, as given in the loading manual, may be used instead of design value.
(7) The shear force is to be adjusted to target value at aft bulkhead of the mid-hold.
(8) The shear force is to be adjusted to target value at forward bulkhead of the mid-hold.
(9) This condition is only required when block loading condition is included in the loading manual.

Table 21 : FE Load combinations applicable for BC-B & BC-C - foremost cargo hold

No.	Description Req[t] ref	Loading pattern	Aft	Mid	Fore	Draught	C_{BM-LC} : % of perm. SWBM	C_{SF-LC} : % of perm. SWSF	Dynamic load case
Seagoing conditions									
1 (1) (3)	Full load [4.1.3]	M_H M_H				T_{SC}	60% (sag.)	100%	HSM-1 BSP-1P/S OST-1P/S OSA-2P/S
2 (2)	Full load [4.2.1] item a	M_{Full} M_{Full}				T_{SC}	60% (sag.)	100%	HSM-1 BSP-1P/S OST-1P/S OSA-2P/S
3	Slack load [4.2.1] item b	M_{Full} 50% M_H				T_{SC}	100% (sag.)	100%	HSM-1 BSP-1P/S OSA-2P/S
4 (4) (5)	Deepest ballast [4.2.1] item c					T_{BAL-H}	100% (hog.)	100%	HSM-1, HSM-2 BSP-1P/S BSR-1P/S OSA-2P/S
5	Multiport 2 [4.2.2] item b	M_{Full}				$0.83T_{SC}$	60% (sag.)	100%	HSM-1, FSM-1 BSP-1P/S OSA-2P/S
6	Multiport 3 [4.2.2] item c	M_{Full} M_{Full}				$0.67T_{SC}$	50% (sag.)	100%	HSM-1 BSP-1P/S OSA-2P/S
7	Multiport 3 [4.2.2] item a	M_{Full}				$0.67T_{SC}$	60% (hog.)	100%	BSP-1P/S OST-2P/S OSA-2P/S
								100% Max SFLC	HSM-2
							0%	100% Max SFLC	HSM-1
Harbour conditions									
8	Harbour condition [4.2.5] items a and b	M_{Full}				T_{H2}	100% (hog.)	100%	N/A
							50% (hog.)	100% (6) Max SFLC	N/A
								100% (7) Max SFLC	N/A
9	Harbour condition [4.2.5] item a	M_{Full}				$0.67T_{SC}$	100% (sag.)	100%	N/A

No.	Description Req^t ref	Loading pattern	Aft	Mid	Fore	Draught	$C_{BM\text{-}LC}$: % of perm. SWBM	$C_{SF\text{-}LC}$: % of perm. SWSF	Dynamic load case
10	Harbour condition [4.2.5] items a and c					T_{H1}	50% (hog.)	100%	N/A

(1) Applicable to BC-B only.
(2) For BC-B ships, the loading pattern no. 1 with the cargo mass M_{Full} and the maximum cargo density as defined in [4.1.3] can be analysed in lieu of this loading pattern.
(3) Maximum cargo density as defined in [4.1.3] is to be used for calculation of dry cargo pressure.
(4) In case of no ballast hold, normal ballast condition with assuming M_{Sw} = 100% (hog.) is to be analysed.
(5) Position of ballast hold is to be adjusted as appropriate.
(6) The shear force is to be adjusted to target value at aft bulkhead of the mid-hold.
(7) The shear force is to be adjusted to target value at forward bulkhead of the mid-hold.

5 STANDARD LOADING CONDITIONS FOR FATIGUE ASSESSMENT

5.1 Oil tanker

5.1.1

The standard loading conditions to be applied to oil tankers for fatigue assessment as required in Ch 9, Sec 1, [6.2], are defined in Table 22 to Table 24. Where fuel oil tanks, other oil tanks or fresh water tanks are arranged in way of the cargo hold region, the filling level of them are to be taken as full for both simplified stress analysis according to Ch 9, Sec 4 and direct strength analysis according to Ch 7 and Ch 9, Sec 5.

[RCN1 to 01 JAN 2020]

Table 22 : Standard design FE loading conditions for fatigue assessment of oil tankers except for foremost and aftmost cargo holds

No.	Description	Loading pattern	Still water loads			Dynamic load cases
			Draught	$C_{BM\text{-}LC}$: % of perm. SWBM	$C_{SF\text{-}LC}$: % of perm. SWSF (1)	
Oil tankers with two oil-tight bulkheads						
A1-F	Full load		T_{SC}	60% (sag.)		All
A2-F	Normal ballast	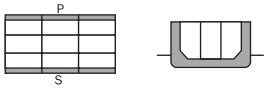	T_{BAL}	80% (hog.)		All
Oil tankers with centreline oil-tight bulkhead						
B1-F	Full load	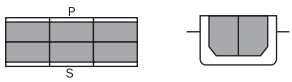	T_{SC}	60% (sag.)		All
B2-F	Normal ballast	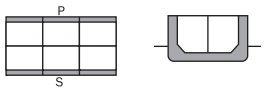	T_{BAL}	80% (hog.)		All

(1) The actual shear force that results from the application of static and dynamic local loads to the FE model are to be used.

Table 23 : Standard design FE loading conditions for fatigue assessment of oil tankers for aftmost cargo hold

No.	Description	Loading pattern	Still water loads			Dynamic load cases
			Draught	$C_{BM\text{-}LC}$: % of perm. SWBM	$C_{SF\text{-}LC}$: % of perm. SWSF (1)	
Oil tankers with two oil-tight bulkheads						
A1-F	Full load	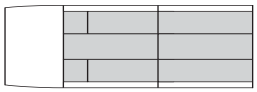	T_{SC}	60% (sag.)		All
A2-F	Normal ballast	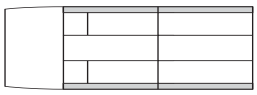	T_{BAL}	80% (hog.)		All
Oil tankers with centreline oil-tight bulkhead						
B1-F	Full load		T_{SC}	60% (sag.)		All
B2-F	Normal ballast	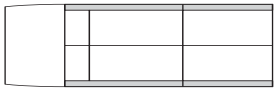	T_{BAL}	80% (hog.)		All
(1)	The actual shear force that results from the application of static and dynamic local loads to the FE model are to be used.					

Table 24 : Standard design FE loading conditions for fatigue assessment of oil tankers for foremost cargo hold

No.	Description	Loading pattern	Still water loads			Dynamic load cases
			Draught	$C_{BM\text{-}LC}$: % of perm. SWBM	$C_{SF\text{-}LC}$: % of perm. SWSF (1)	
Oil tankers with two oil-tight bulkheads						
A1-F	Full load	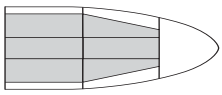	T_{SC}	60% (sag.)		All
A2-F	Normal ballast	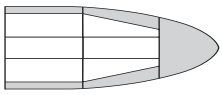	T_{BAL}	80% (hog.)		All
Oil tankers with centreline oil-tight bulkhead						
B1-F	Full load	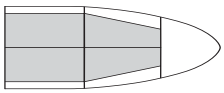	T_{SC}	60% (sag.)		All
B2-F	Normal ballast	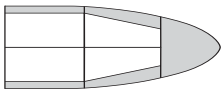	T_{BAL}	80% (hog.)		All
(1)	The actual shear force that results from the application of static and dynamic local loads to the FE model are to be used.					

5.2 Bulk carriers

5.2.1

The standard loading conditions to be applied to bulk carriers for fatigue assessment as required in Ch 9, Sec 1, [6.3] are defined in Table 25, to Table 31 according to their additional service feature notations and the location of the assessed details. Where fuel oil tanks, other oil tanks or fresh water tanks are arranged in way of the cargo hold region, the filling level of them are to be taken as full for both simplified stress analysis according to Ch 9, Sec 4 and direct strength analysis according to Ch 7 and Ch 9, Sec 5.

[RCN1 to 01 JAN 2020]

Table 25 : Standard design FE Load combinations for fatigue assessment applicable to empty hold of BC-A in alternate condition (EA) - cargo hold region except aftmost and foremost cargo holds

No.	Description	Loading pattern	Aft	Mid	Fore	Draught	C_{BM-LC} : % of perm. SWBM	C_{SF-LC} : % of perm. SWSF	Dynamic load case
1-F (1)	Full load homogeneous	M_H M_H M_H				T_{SC}	40% (sag.)		All
2-F (2)	Full load alternate	M_{HD} M_{HD}				T_{SC}	75% (hog.)	100%	All
3-F (1)	Normal ballast					T_{BAL}	80% (hog.)		All
4-F (2) (3)	Heavy ballast					T_{BAL-H}	75% (sag.)	100%	All
5-F (2) (4)						T_{BAL-H}	45% (hog.)	100%	All
6-F (1) (5)						T_{BAL-H}	45% (hog.)		All

(1) The actual shear force curve that results from the application of static and dynamic local loads to the FE model are to be used.

(2) The actual shear force curve that results from the application of static and dynamic local loads to the FE model are to be used. Where this shear force exceeds the target value, the correction of vertical loads is to be applied to adjust the shear force down to the target value.

(3) This condition is to be considered for empty cargo hold which is assigned as ballast hold, if any

(4) This condition is applicable when the WB hold corresponds to the forward or aft hold of the 3 hold model.

(5) This condition is applicable when the WB hold is located outside the 3 cargo hold model

Table 26 : Standard design FE Load combinations for fatigue assessment applicable to loaded hold of BC-A in alternate condition (FA) - cargo hold region except aftmost and foremost cargo holds

No.	Description	Loading pattern	Aft	Mid	Fore	Draught	C_{BM-LC} : % of perm. SWBM	C_{SF-LC} : % of perm. SWSF	Dynamic load case
1-F (1)	Full load homogeneous	M_H M_H M_H				T_{SC}	40% (sag.)		All
2-F (2)	Full load alternate	M_{HD}				T_{SC}	75% (hog.)	100%	All
3-F (1)	Normal ballast					T_{BAL}	80% (hog.)		All
4-F (2) (3)	Heavy ballast					T_{BAL-H}	75% (sag.)	100%	All
5-F (2) (4)						T_{BAL-H}	45% (hog.)	100%	All
6-F (1) (5)						T_{BAL-H}	45% (hog.)		All

(1) The actual shear force that results from the application of static and dynamic local loads to the FE model are to be used.

(2) The actual shear force that results from the application of static and dynamic local loads to the FE model are to be used. Where this shear force exceeds the target value, the correction of vertical loads is to be applied to adjust the shear force down to the target value.

(3) This condition is to be considered for loaded cargo hold which is assigned as ballast hold, if any

(4) This condition is applicable when the WB hold corresponds to the forward or aft hold of the 3 hold model.

(5) This condition is applicable when the WB hold is located outside the 3 cargo hold model.

Table 27 : Standard design FE Load combinations for fatigue assessment applicable to loaded hold of BC-A in alternate condition (FA) - Aftmost cargo hold

No.	Description	Loading pattern	Aft	Mid	Fore	Draught	C_{BM-LC} : % of perm. SWBM	C_{SF-LC} : % of perm. SWSF	Dynamic load case
1-F (1)	Full load homogeneous	M_H M_H				T_{SC}	40% (sag.)		All
2-F (2)	Full load alternate	M_{HD}				T_{SC}	75% (hog.)	100%	All
3-F (1)	Normal ballast					T_{BAL}	80% (hog.)		All
4-F (1) (3)	Heavy ballast					T_{BAL-H}	45% (hog.)		All

(1) The actual shear force that results from the application of static and dynamic local loads to the FE model are to be used.

(2) The actual shear force that results from the application of static and dynamic local loads to the FE model are to be used. Where this shear force exceeds the target value, the correction of vertical loads is to be applied to adjust the shear force down to the target value.

(3) This condition is applicable when the WB hold is located outside the 3 cargo hold model.

Table 28 : Standard design FE Load combinations for fatigue assessment applicable to loaded hold of BC-A in alternate condition (FA) - Foremost cargo hold

No.	Description	Loading pattern	Aft	Mid	Fore	Draught	$C_{BM\text{-}LC}$: % of perm. SWBM	$C_{SF\text{-}LC}$: % of perm. SWSF	Dynamic load case
1-F (1)	Full load homogeneous					T_{SC}	40% (sag.)		All
2-F (2)	Full load alternate					T_{SC}	75% (hog.)	100%	All
3-F (1)	Normal ballast					T_{BAL}	80% (hog.)		All
4-F (1) (3)	Heavy ballast					$T_{BAL\text{-}H}$	45% (hog.)		All

(1) The actual shear force that results from the application of static and dynamic local loads to the FE model are to be used.

(2) The actual shear force that results from the application of static and dynamic local loads to the FE model are to be used. Where this shear force exceeds the target value, the correction of vertical loads is to be applied to adjust the shear force down to the target value.

(3) This condition is applicable when the WB hold is located outside the 3 cargo hold model.

Table 29 : Standard design FE load combinations for fatigue assessment of BC-B, BC-C bulk carriers - cargo hold region except aftmost and foremost cargo holds

No.	Description	Loading pattern	Aft	Mid	Fore	Draught	$C_{BM\text{-}LC}$: % of perm. SWBM	$C_{SF\text{-}LC}$: % of perm. SWSF	Dynamic load case
1-F (1)	Full load homogeneous	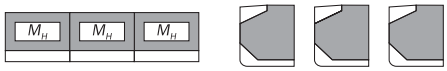				T_{SC}	40% (sag.)		All
2-F (1)	Normal ballast	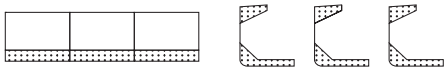				T_{BAL}	80% (hog.)		All
3-F (2) (3)	Heavy ballast	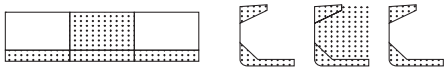				$T_{BAL\text{-}H}$	75% (sag.)	100%	All
4-F (2) (4)		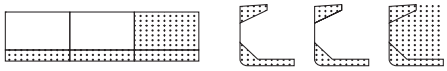				$T_{BAL\text{-}H}$	45% (hog.)	100%	All
5-F (1) (5)		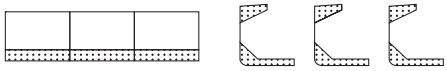				$T_{BAL\text{-}H}$	45% (hog.)		All

(1) The actual shear force curve that results from the application of static and dynamic local loads to the FE model are to be used.

(2) The actual shear force curve that results from the application of static and dynamic local loads to the FE model are to be used. Where this shear force exceeds the target value, the correction of vertical loads is to be applied to adjust the shear force down to the target value.

(3) This condition is to be considered for cargo hold which is assigned as ballast hold, if any.

(4) This condition is applicable when the WB hold corresponds to the forward or aft hold of the 3 hold model.

(5) This condition is applicable when the WB hold is located outside the 3 cargo hold model.

Table 30 : Standard design FE load combinations for fatigue assessment of BC-B, BC-C bulk carriers - Aftmost cargo hold

No.	Description	Loading pattern	Aft	Mid	Fore	Draught	C_{BM-LC} : % of perm. SWBM	C_{SF-LC} : % of perm. SWSF	Dynamic load case
1-F (1)	Full load homogeneous	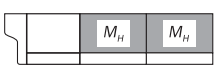				T_{SC}	40% (sag.)		All
2-F (1)	Normal ballast	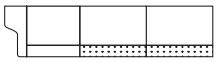				T_{BAL}	80% (hog.)		All
3-F (1)	Heavy ballast	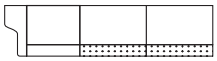				T_{BAL-H}	45% (hog.)		All
(1)	The actual shear force curve that results from the application of static and dynamic local loads to the FE model are to be used.								

Table 31 : Standard design FE load combinations for fatigue assessment of BC-B, BC-C bulk carriers - Foremost cargo hold

No.	Description	Loading pattern	Aft	Mid	Fore	Draught	C_{BM-LC} : % of perm. SWBM	C_{SF-LC} : % of perm. SWSF	Dynamic load case
1-F (1)	Full load homogeneous	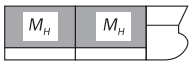				T_{SC}	40% (sag.)		All
2-F (1)	Normal ballast	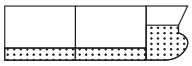				T_{BAL}	80% (hog.)		All
3-F (1)	Heavy ballast	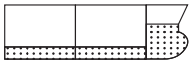				T_{BAL-H}	45% (hog.)		All
(1)	The actual shear force curve that results from the application of static and dynamic local loads to the FE model are to be used.								

APPENDIX 1
HOLD MASS CURVES

SYMBOLS

Symbols

h : Vertical distance from the top of inner bottom plating to the lowest point of the upper deck plating at the ship's centreline, in m.

h_a : Vertical distance from the top of inner bottom plating to the lowest point of the upper deck plating at the ship's centreline of the aft cargo hold of two adjacent cargo holds, in m.

h_f : Vertical distance from the top of inner bottom plating to the lowest point of the upper deck plating at the ship's centreline of the fore cargo hold of two adjacent cargo holds, in m.

M_H : Cargo mass, in t, as defined in Ch 4, Sec 6.

M_{Full} : Cargo mass, in t, as defined in Ch 4, Sec 6.

M_{HD} : Cargo mass, in t, as defined in Ch 4, Sec 6.

M_{BLK} : The maximum cargo mass in a cargo hold of two adjacent cargo holds according to the block loading condition in the loading manual, in t.

T_i : In loading condition No. *i*, draught, in m, at mid-hold position of single cargo hold length or at mid-length of the two adjacent cargo holds considered.

T_{min} : 0.75 T_{SC} or draught in ballast conditions with the two adjacent cargo holds empty, whichever is greater, in m.

T_{H1} : Minimum permissible draught, in m, in harbour condition with M_{Full} in each of the two adjacent holds to be taken as:

- For ships having {No MP} notation assigned:

$$T_{H1} = min\left(\begin{array}{l} 0.67T_{SC} \\ T_{SC} - \dfrac{0.15\sum M_{Full}}{1.025\left(\dfrac{V_f}{h_f} + \dfrac{V_a}{h_a}\right)} \end{array}\right.$$

- For ships not having {No MP} notation assigned:

$$T_{H1} = 0.67T_{SC} - \frac{0.15\sum M_{Full}}{1.025\left(\dfrac{V_f}{h_f} + \dfrac{V_a}{h_a}\right)}$$

T_{H2} : Minimum permissible draught, in m, in harbour condition with M_{Full} in EA holds of BC-A ships or with M_{Full} in any holds of BC-B and BC-C ships to be taken as:

- For ships having {No MP} notation assigned:

$$T_{H2} = min\left(\begin{array}{l} 0.67T_{SC} \\ T_{SC} - \dfrac{0.15M_{Full}}{1.025\dfrac{V_H}{h}} \end{array}\right.$$

- For ships not having {No MP} notation assigned:

$$T_{H2} = 0.67T_{SC} - \frac{0.15M_{Full}}{1.025\frac{V_H}{h}}$$

T_{H3} : Minimum permissible draught, in m, in harbour condition in case of block loading with M_{BLK} in each of the two adjacent holds of BC-A ships to be taken as:

$$T_{H3} = T_{SC} - \frac{\sum(0.15M_{BLK} + 0.1M_H)}{1.025\left(\frac{V_f}{h_f} + \frac{V_a}{h_a}\right)}$$

T_{H4} : Minimum permissible draught, in m, in harbour condition with M_{HD} in FA holds of BC-A ships to be taken as:

$$T_{H4} = min\begin{cases} 0.67T_{SC} \\ T_{SC} - \frac{0.15M_{HD} + 0.1M_H}{1.025\frac{V_H}{h}} \end{cases}$$

V_H : Volume in m^3, as defined in Ch 4, Sec 6.

V_a : Volume of the after cargo hold of two adjacent cargo holds excluding volume of the hatchway part, in m^3.

V_f : Volume of the forward cargo hold of two adjacent cargo holds excluding volume of the hatchway part, in m^3

Σ : The sum of masses of two adjacent cargo holds.

EA : Empty hold in alternate loading condition.

FA : Full hold in alternate loading condition.

1 GENERAL

1.1 Application

1.1.1

The requirements of this appendix apply to bulk carriers of 150 m in length *L* and above.

1.1.2

This appendix describes the procedure to be used for determination of:

- The maximum and minimum mass of cargo in each cargo hold as a function of the draught at mid-hold position of cargo hold.
- The maximum and minimum mass of cargo in any two adjacent holds as a function of the draught at mid-length of these two adjacent cargo holds.

1.1.3 General

The cargo mass curves of single cargo hold or of two adjacent cargo holds in seagoing and harbour conditions as defined in [2] and [3] are based on the loading conditions considered in Ch 4, Sec 8, [4.2]. However if the ship structure is checked for more severe loading conditions than the ones considered in Ch 4, Sec 8, [4.2.7], the minimum required cargo mass and the maximum allowable cargo mass can be based on those corresponding loading conditions.

1.1.4 Loading/unloading conditions in harbour

For any bulk carrier, the maximum permissible cargo mass and the minimum required cargo mass of single cargo hold or of two adjacent cargo holds, corresponding to draught for loading/unloading conditions in harbour may be increased or decreased by 15% of the maximum permissible mass at the maximum draught for the cargo hold in seagoing condition. However, maximum permissible mass is in no case to be greater than the maximum permissible cargo mass at designed maximum load draught for each cargo hold.

1.1.5 Maximum and minimum permissible mass expression

The maximum and minimum permissible mass in seagoing conditions, $(W_{maxS}(T_i), W_{minS}(T_i))$ and in harbour condition $((W_{maxH}(T_i), W_{minH}(T_i))$ at various draughts (T_i) is obtained, in t, by the following formulae given in tables of [2] and [3] for the followings.:

- BC-A ship not having {No MP} notation assigned,
- BC-A ship having {No MP} notation assigned,
- BC-B and BC-C ships not having {No MP} notation assigned,
- BC-B and BC-C ships having {No MP} notation assigned,

Examples for mass curve of loaded cargo holds and cargo hold which can be empty at the maximum draught for BC-A ships not having {No MP} assigned are shown in figures of the above mentioned tables.

2 MAXIMUM AND MINIMUM MASSES OF CARGO IN EACH HOLD

2.1 Maximum permissible mass and minimum required mass of single cargo hold

2.1.1 BC-A ship not having {No MP} notation assigned

Table 1 : BC-A ship not having {No MP} notation assigned

Hold	Loading conditions	Max / Min curves	Curve Ref	Ref
FA	Seagoing	Maximum: $W_{maxS}(T_i) = M_{HD} + 0.1\ M_H - 1.025\ V_H \dfrac{(T_{SC} - T_i)}{h} \le M_{HD}$	I	Ch 4, Sec 8, [4.2.3] b & c
		Minimum: $W_{minS}(T_i) = 1.025\ V_H \dfrac{(T_i - 0.83T_{SC})}{h} \ge 0$	II	Ch 4, Sec 8, [4.2.2] b
	Harbour	Maximum: $W_{maxH}(T_i) = max\left(\begin{array}{l} M_{HD} - 1.025\ V_H \dfrac{(0.67T_{SC} - T_i)}{h} \le M_{HD} \\ W_{maxS}(T_i) + 0.15M_{HD} \le M_{HD} \end{array} \right.$	III-1 III-2	Ch 4, Sec 8, [4.2.6] a Ch 4, Sec 8, [4.2.5]
		Minimum: $W_{minH}(T_i) = W_{minS}(T_i) - 0.15M_{HD} \ge 0$	IV	Ch 4, Sec 8, [4.2.5]

Example BC-A ships not having {No MP} for FA holds

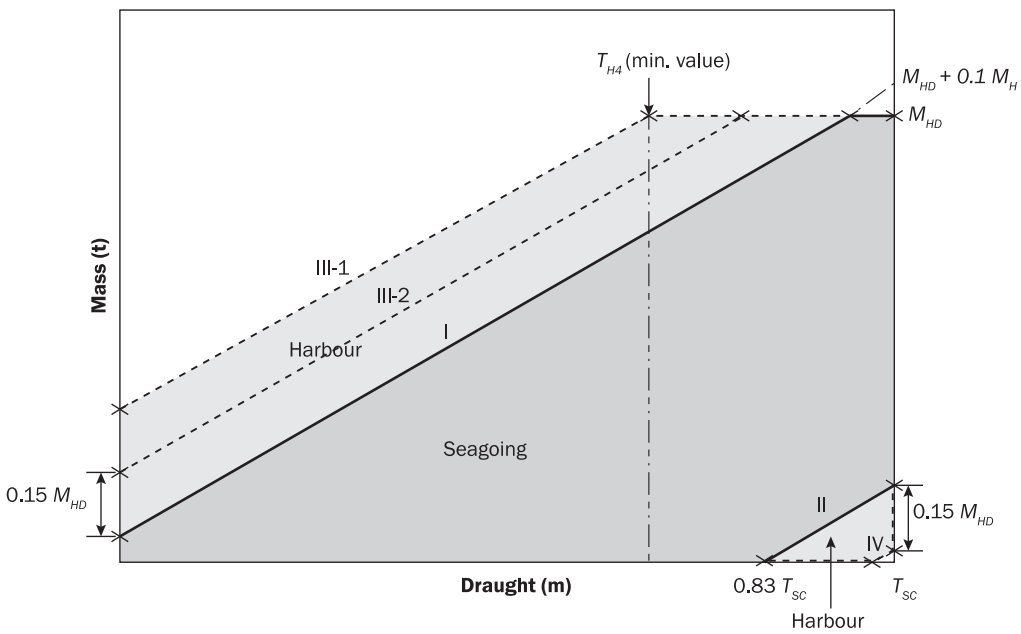

Hold	Loading conditions	Max / Min curves	Curve Ref	Ref
EA	Seagoing	Maximum $W_{maxS}(T_i) = M_{Full} - 1.025\ V_H \dfrac{(0.67T_{SC} - T_i)}{h} \le M_{Full}$	I	Ch 4, Sec 8, [4.2.2] a
		Minimum: $W_{minS}(T_i) = 1.025\ V_H \dfrac{(T_i - T_{SC})}{h} \ge 0$	II	Ch 4, Sec 8, [4.2.3] a
	Harbour	Maximum $W_{maxH}(T_i) = W_{maxS}(T_i) + 0.15M_{Full} \le M_{Full}$	III	Ch 4, Sec 8, [4.2.5]
		Minimum: $W_{minH}(T_i) = W_{minS}(T_i) - 0.15M_{Full} \ge 0$	IV	Ch 4, Sec 8, [4.2.5]
	Example BC-A ships not having {No MP} for EA hold 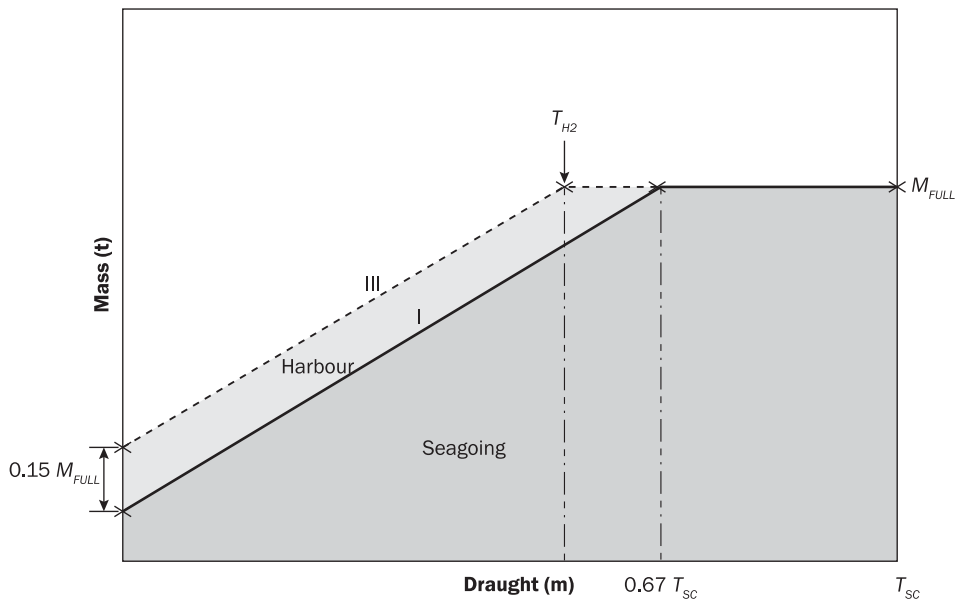			

2.1.2 BC-A ship having {No MP} notation assigned

Table 2 : BC-A ship having {No MP} notation assigned

Hold	Loading conditions	Max / Min curves	Curve Ref	Ref
FA	Seagoing	Maximum: $W_{maxS}(T_i) = M_{HD} + 0.1\ M_H - 1.025\ V_H \dfrac{(T_{SC} - T_i)}{h} \le M_{HD}$	I	Ch 4, Sec 8, [4.2.3] b & c
		Minimum: $W_{minS}(T_i) = min \begin{cases} 1.025 V_H \dfrac{(T_i - T_{BAL-H})}{h} \ge 0 \\ 0.5 M_H - 1.025\ V_H \dfrac{(T_{SC} - T_i)}{h} \ge 0 \end{cases}$	II-1 II-2	Ch 4, Sec 8, [4.2.1] c Ch 4, Sec 8, [4.2.1] b
	Harbour	Maximum: $W_{maxH}(T_i) = max \begin{cases} M_{HD} - 1.025\ V_H \dfrac{(0.67 T_{SC} - T_i)}{h} \le M_{HD} \\ W_{maxS}(T_i) + 0.15 M_{HD} \le M_{HD} \end{cases}$	III-1 III-2	Ch 4, Sec 8, [4.2.6] a Ch 4, Sec 8, [4.2.5]
		Minimum: $W_{minH}(T_i) = W_{minS}(T_i) - 0.15 M_{HD} \ge 0$	IV	Ch 4, Sec 8, [4.2.5]

Example BC-A ships having {No MP} for FA hold

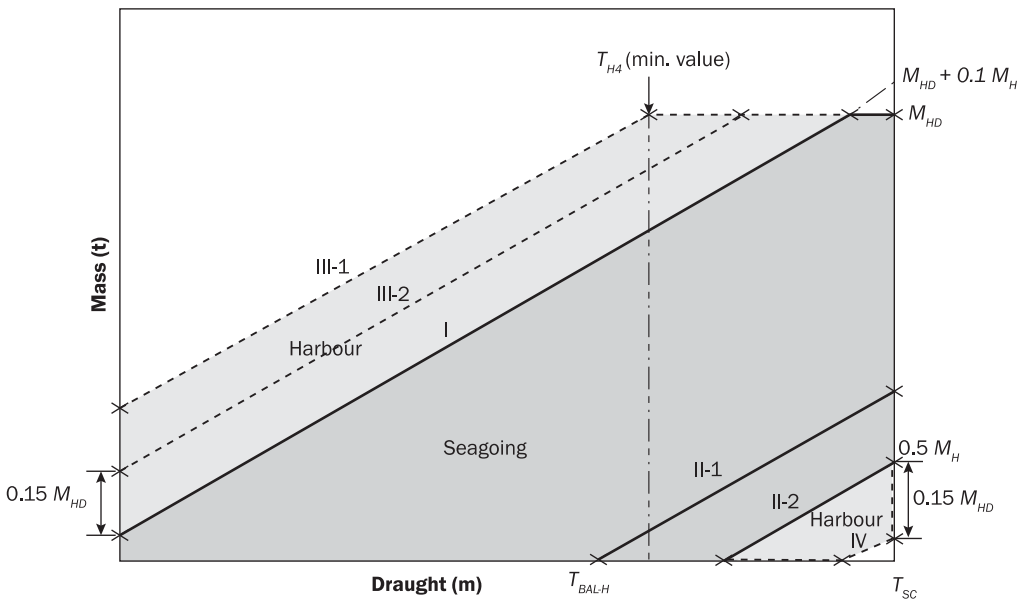

Hold	Loading conditions	Max / Min curves	Curve Ref	Ref
EA	Seagoing	Maximum $W_{maxS}(T_i) = M_{Full} - 1.025\ V_H \dfrac{(T_{SC} - T_i)}{h} \le M_{Full}$	I	Ch 4, Sec 8, [4.2.1] a
		Minimum: $W_{minS}(T_i) = 1.025\ V_H \dfrac{(T_i - T_{SC})}{h} \ge 0$	II	Ch 4, Sec 8, [4.2.3] a
	Harbour	Maximum $W_{maxH}(T_i) = max \begin{cases} M_{Full} - 1.025\ V_H \dfrac{(0.67T_{SC} - T_i)}{h} \le M_{Full} \\ W_{maxS}(T_i) + 0.15M_{Full} \le M_{Full} \end{cases}$	III-1 III-2	Ch 4, Sec 8, [4.2.6] a Ch 4, Sec 8, [4.2.5]
		Minimum: $W_{minH}(T_i) = W_{minS}(T_i) - 0.15M_{Full} \ge 0$	IV	Ch 4, Sec 8, [4.2.5]

Example BC-A ships having {No MP} for EA hold

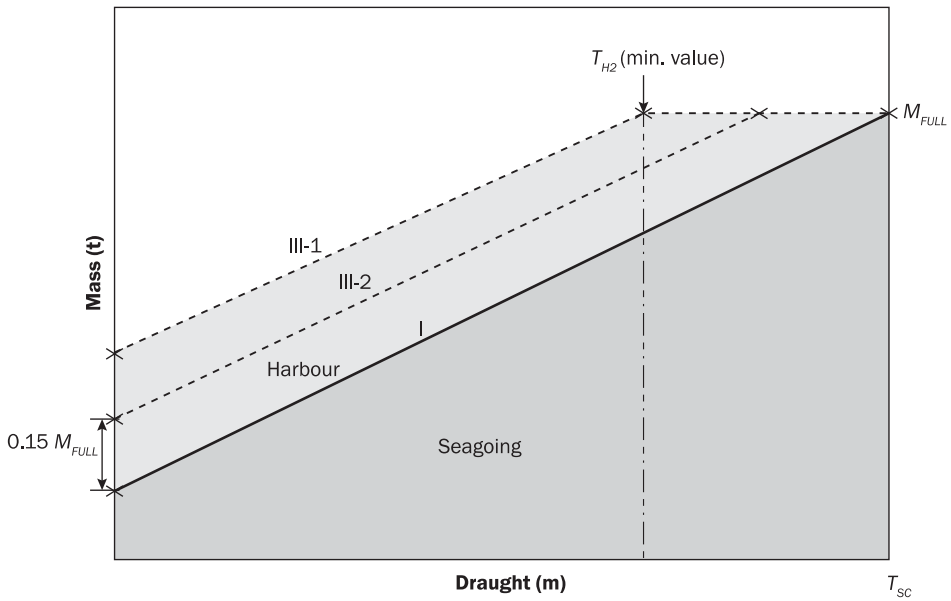

2.1.3 BC-B and BC-C ships not having {No MP} notation assigned

Table 3 : BC-B and BC-C ships not having {No MP} notation assigned

Loading conditions	Max / Min curves	Curve Ref	Ref
Seagoing	Maximum $W_{maxS}(T_i) = M_{Full} - 1.025\ V_H \dfrac{(0.67T_{SC} - T_i)}{h} \le M_{Full}$	I	Ch 4, Sec 8, [4.2.2] a
	Minimum: $W_{minS}(T_i) = 1.025\ V_H \dfrac{(T_i - 0.83T_{SC})}{h} \ge 0$	II	Ch 4, Sec 8, [4.2.2] b
Harbour	Maximum $W_{maxH}(T_i) = W_{maxS}(T_i) + 0.15M_{Full} \le M_{Full}$	III	Ch 4, Sec 8, [4.2.5]
	Minimum: $W_{minH}(T_i) = W_{minS}(T_i) - 0.15M_{Full} \ge 0$	IV	Ch 4, Sec 8, [4.2.5]

Example BC-B and BC-C ships not having {No MP}

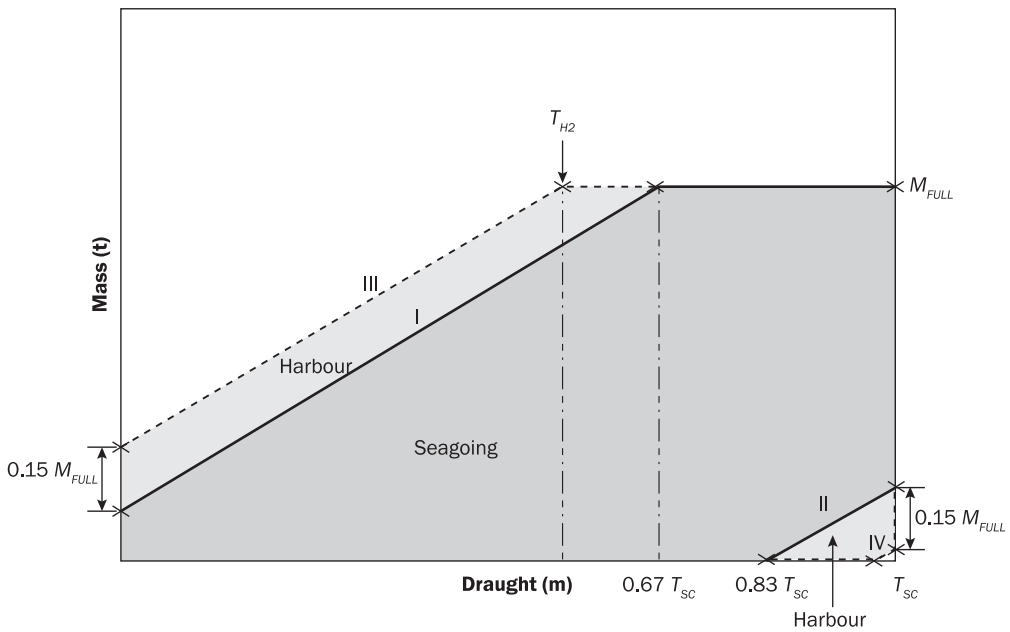

2.1.4 BC-B and BC-C ships having {No MP} notation assigned

Table 4 : BC-B and BC-C ships having {No MP} notation assigned

Loading conditions	Max / Min curves	Curve Ref	Ref
Seagoing	Maximum: $W_{maxS}(T_i) = M_{Full} - 1.025\ V_H \dfrac{(T_{SC} - T_i)}{h} \le M_{Full}$	I	Ch 4, Sec 8, [4.2.1] a
	Minimum: $W_{minS}(T_i) = min \begin{cases} 1.025 V_H \dfrac{(T_i - T_{BAL-H})}{h} \ge 0 \\ 0.5 M_H - 1.025\ V_H \dfrac{(T_{SC} - T_i)}{h} \ge 0 \end{cases}$	II-1 II-2	Ch 4, Sec 8, [4.2.1] c Ch 4, Sec 8, [4.2.1] b
Harbour	Maximum: $W_{maxH}(T_i) = max \begin{cases} M_{Full} - 1.025\ V_H \dfrac{(0.67 T_{SC} - T_i)}{h} \le M_{Full} \\ W_{maxS}(T_i) + 0.15 M_{Full} \le M_{Full} \end{cases}$	III-1 III-2	Ch 4, Sec 8, [4.2.6] a Ch 4, Sec 8, [4.2.5]
	Minimum: $W_{minH}(T_i) = W_{minS}(T_i) - 0.15 M_{Full} \ge 0$	IV	Ch 4, Sec 8, [4.2.5]

Example BC-B and BC-C ships having {No MP}

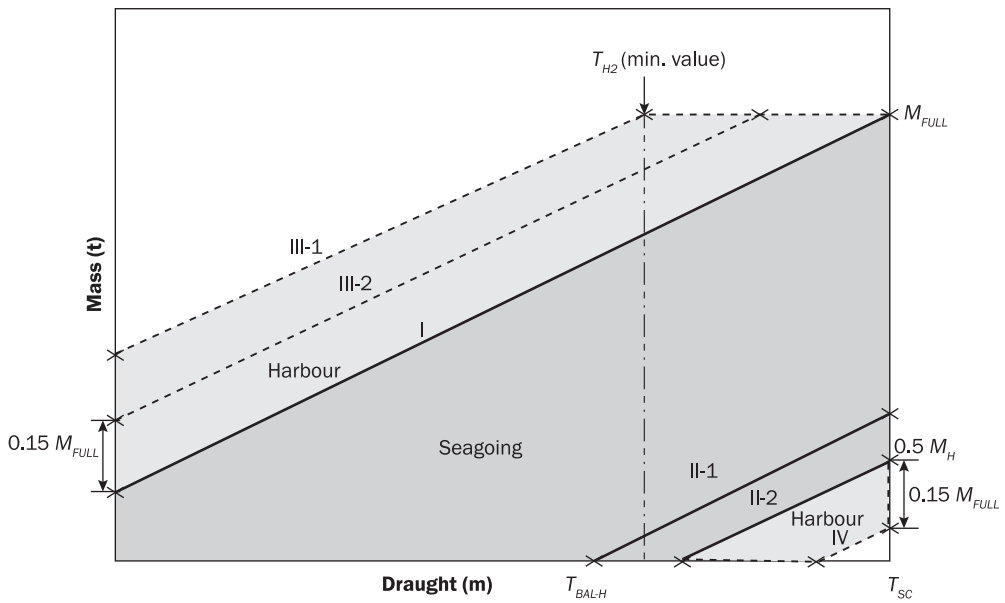

3 MAXIMUM AND MINIMUM MASSES OF CARGO OF TWO ADJACENT HOLDS

3.1 Maximum permissible mass and minimum required mass of two adjacent holds

3.1.1 BC-A ships not having {No MP} notation assigned

Table 5 : BC-A ship not having {No MP} notation assigned

Loading conditions	Max / Min curves	Curve Ref	Ref
Seagoing	Maximum: $W_{maxS}(T_i) = max \begin{cases} \sum(M_{BLK} + 0.1\ M_H) - 1.025\left(\frac{V_f}{h_f} + \frac{V_a}{h_a}\right)(T_{SC} - T_i) \le \sum M_{BLK} \\ \sum M_{Full} - 1.025\left(\frac{V_f}{h_f} + \frac{V_a}{h_a}\right)(0.67T_{SC} - T_i) \le \sum M_{Full} \end{cases}$	I-1 (1) I-2	Ch 4, Sec 8, [4.2.3] d Ch 4, Sec 8, [4.2.2] c
	Minimum: $W_{minS}(T_i) = 1.025\left(\frac{V_f}{h_f} + \frac{V_a}{h_a}\right)(T_i - 0.75T_{SC}) \ge 0$	II	Ch 4, Sec 8, [4.2.2] d
Harbour	Maximum: $W_{maxH}(T_i) = max \begin{cases} W_{maxS}(T_i) + 0.15\sum M_{BLK} \le \sum M_{BLK} \\ W_{maxS}(T_i) + 0.15\sum M_{Full} \le \sum M_{Full} \end{cases}$	III-1 (1) III-2	Ch 4, Sec 8, [4.2.5] Ch 4, Sec 8, [4.2.5]
	Minimum: $W_{minH}(T_i) = min \begin{cases} W_{minS}(T_i) - 0.15\sum M_{BLK} \ge 0 \\ W_{minS}(T_i) - 0.15\sum M_{Full} \ge 0 \end{cases}$	IV-1 (1) IV-2	Ch 4, Sec 8, [4.2.5] Ch 4, Sec 8, [4.2.5]

(1) This limit curve is only applicable when block loading condition is included in the loading manual.

Example BC-A ships not having {No MP} for two adjacent holds

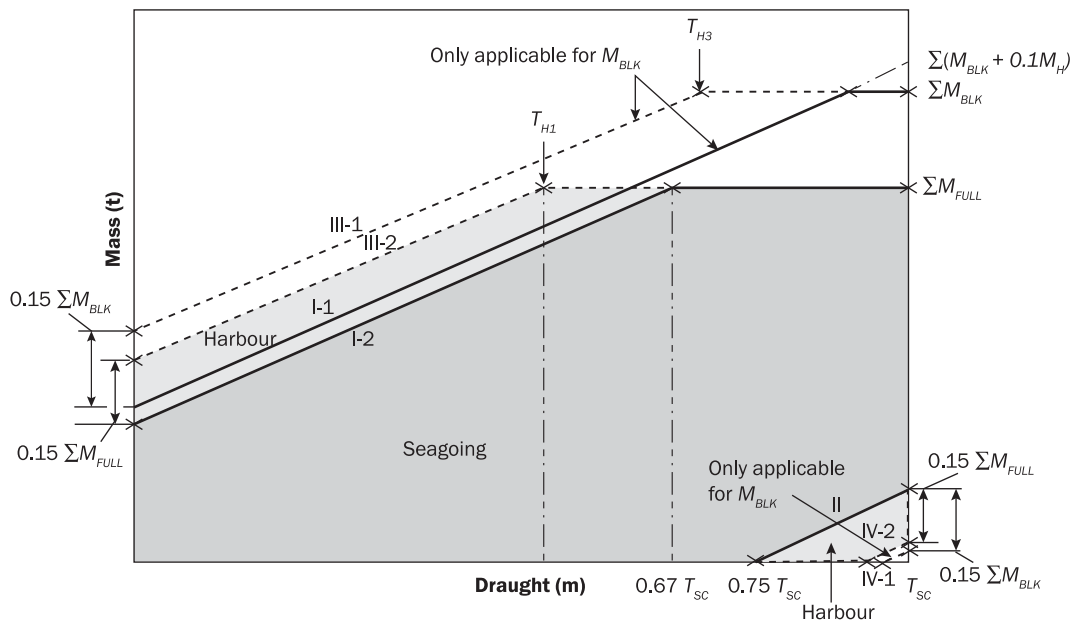

3.1.2 BC-A ships having {No MP} notation assigned

Table 6 : BC-A ship having {No MP} notation assigned

Loading conditions	Max / Min curves	Curve Ref	Ref
Seagoing	Maximum: $W_{maxS}(T_i) = max \begin{cases} \sum(M_{BLK} + 0.1\ M_H) - 1.025\left(\frac{V_f}{h_f} + \frac{V_a}{h_a}\right)(T_{SC} - T_i) \le \sum M_{BLK} \\ \sum M_{Full} - 1.025\left(\frac{V_f}{h_f} + \frac{V_a}{h_a}\right)(T_{SC} - T_i) \le \sum M_{Full} \end{cases}$	I-1 (1) I-2	Ch 4, Sec 8, [4.2.3] d Ch 4, Sec 8, [4.2.2] a
	Minimum: $W_{minS}(T_i) = min \begin{cases} 1.025\left(\frac{V_f}{h_f} + \frac{V_a}{h_a}\right)(T_i - T_{BAL-H}) \ge 0 \\ 0.5\sum M_H - 1.025\left(\frac{V_f}{h_f} + \frac{V_a}{h_a}\right)(T_{SC} - T_i) \ge 0 \end{cases}$	II-1 II-2	Ch 4, Sec 8, [4.2.2] c Ch 4, Sec 8, [4.2.2] b
Harbour	Maximum: $W_{maxH}(T_i) = max \begin{cases} W_{maxS}(T_i) + 0.15\sum M_{BLK} \le \sum M_{BLK} \\ \sum M_{Full} - 1.025\left(\frac{V_f}{h_f} + \frac{V_a}{h_a}\right)(0.67T_{SC} - T_i) \le \sum M_{Full} \\ W_{maxS}(T_i) + 0.15\sum M_{Full} \le \sum M_{Full} \end{cases}$	III-1 (1) III-2 III-3	Ch 4, Sec 8, [4.2.5] Ch 4, Sec 8, [4.2.6] b Ch 4, Sec 8, [4.2.5]
	Minimum: $W_{minH}(T_i) = min \begin{cases} W_{minS}(T_i) - 0.15\sum M_{BLK} \ge 0 \\ W_{minS}(T_i) - 0.15\sum M_{Full} \ge 0 \end{cases}$	IV-1 (1) IV-2	Ch 4, Sec 8, [4.2.5] Ch 4, Sec 8, [4.2.5]

(1) This limit curve is only applicable when block loading condition is included in the loading manual.

Example BC-A ships having {No MP} for two adjacent holds

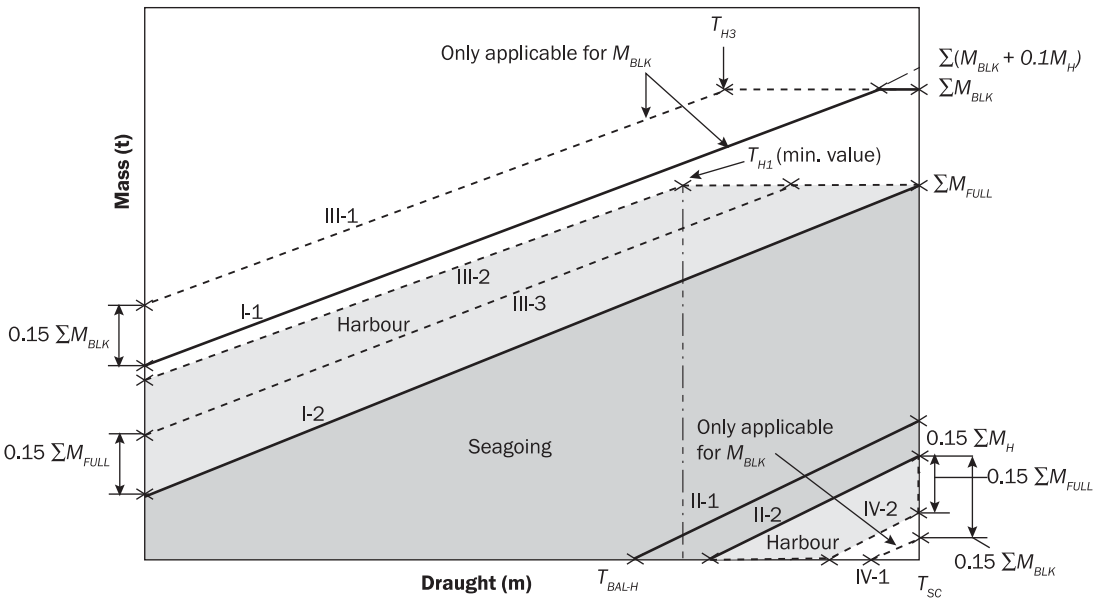

3.1.3 BC-B, BC-C ships, not having {No MP} notation assigned

Table 7 : BC-B and BC-C ships not having {No MP} notation assigned

Loading conditions	Max / Min curves	Curve Ref	Ref
Seagoing	Maximum: $W_{maxS}(T_i) = \sum M_{Full} - 1.025\left(\frac{V_f}{h_f} + \frac{V_a}{h_a}\right)(0.67T_{SC} - T_i) \le \sum M_{Full}$	I	Ch 4, Sec 8, [4.2.2] c
	Minimum: $W_{minS}(T_i) = 1.025\left(\frac{V_f}{h_f} + \frac{V_a}{h_a}\right)(T_i - 0.75T_{SC}) \ge 0$	II	Ch 4, Sec 8, [4.2.2] d
Harbour	Maximum: $W_{maxH}(T_i) = W_{maxS}(T_i) + 0.15\sum M_{Full} \le \sum M_{Full}$	III	Ch 4, Sec 8, [4.2.5]
	Minimum: $W_{minH}(T_i) = W_{minS}(T_i) - 0.15\sum M_{Full} \ge 0$	IV	Ch 4, Sec 8, [4.2.5]

Example BC-B and BC-C ships not having {No MP} for two adjacent holds

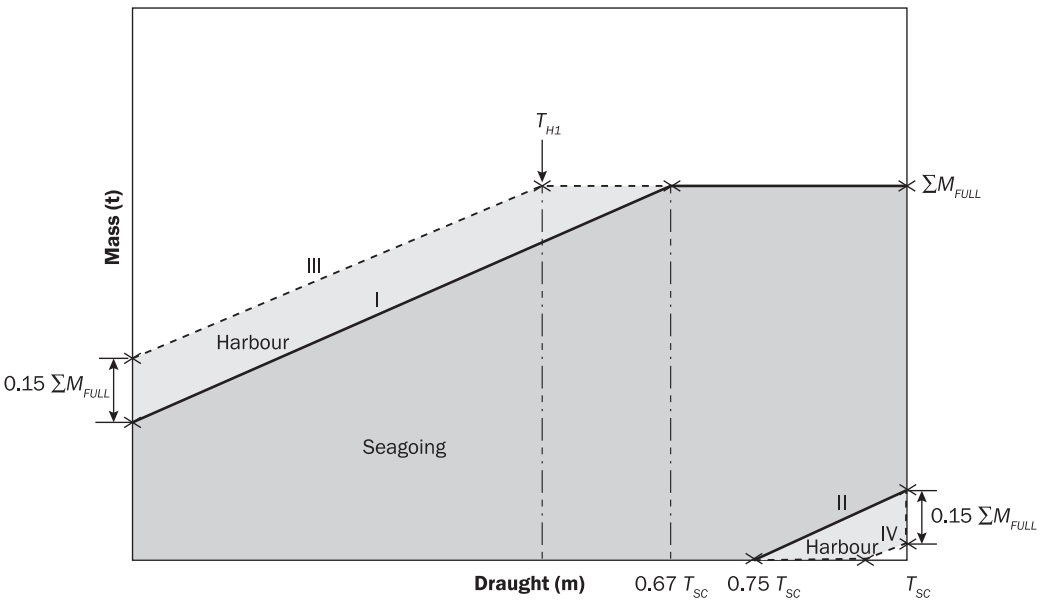

3.1.4 BC-B, BC-C ships, having {No MP} notation assigned

Table 8 : BC-B and BC-C ships having {No MP} notation assigned

Loading conditions	Max / Min curves	Curve Ref	Ref
Seagoing	Maximum: $W_{maxS}(T_i) = \sum M_{Full} - 1.025\left(\frac{V_f}{h_f} + \frac{V_a}{h_a}\right)(T_{SC} - T_i) \le \sum M_{Full}$	I	Ch 4, Sec 8, [4.2.1] a
	Minimum: $W_{minS}(T_i) = min\begin{cases} 1.025\left(\frac{V_f}{h_f} + \frac{V_a}{h_a}\right)(T_i - T_{BAL-H}) \ge 0 \\ 0.5\sum M_H - 1.025\left(\frac{V_f}{h_f} + \frac{V_a}{h_a}\right)(T_{SC} - T_i) \ge 0 \end{cases}$	II-1 II-2	Ch 4, Sec 8, [4.2.1] c Ch 4, Sec 8, [4.2.1] b
Harbour	Maximum: $W_{maxH}(T_i) = max\begin{cases} \sum M_{Full} - 1.025\left(\frac{V_f}{h_f} + \frac{V_a}{h_a}\right)(0.67T_{SC} - T_i) \le \sum M_{Full} \\ W_{maxS}(T_i) + 0.15\sum M_{Full} \le \sum M_{Full} \end{cases}$	III-1 III-2	Ch 4, Sec 8, [4.2.6] a Ch 4, Sec 8, [4.2.5]
	Minimum: $W_{minH}(T_i) = W_{minS}(T_i) - 0.15\sum M_{Full} \ge 0$	IV	Ch 4, Sec 8, [4.2.5]

Example BC-B and BC-C ships having {No MP} for two adjacent holds

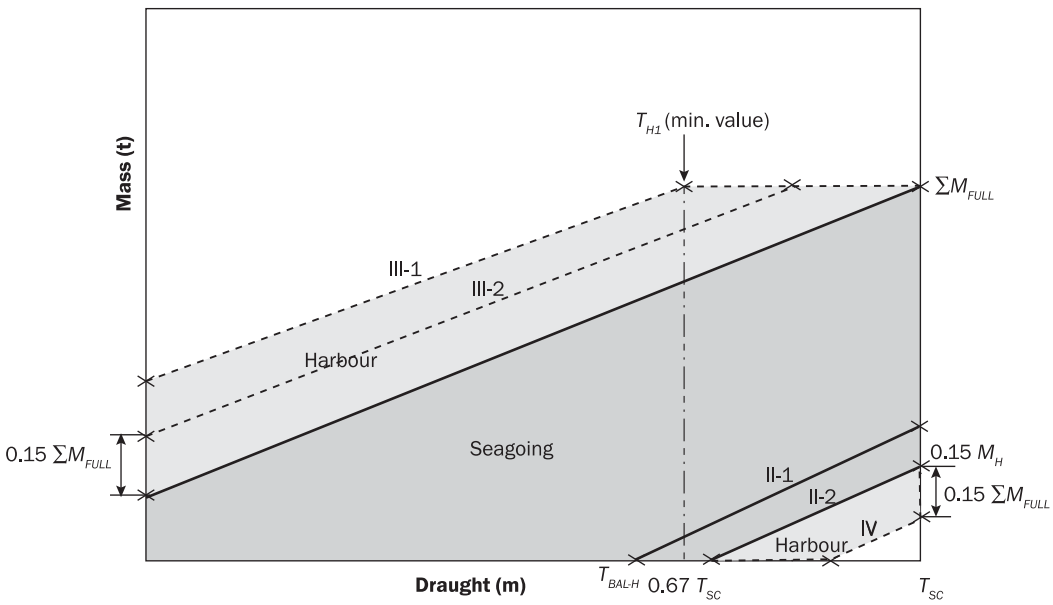

PART 1 CHAPTER 5

HULL GIRDER STRENGTH

Table of Contents

SECTION 1
Hull Girder Yielding Strength
1 Strength Characteristics of Hull Girder Transverse Sections
2 Hull Girder Bending Assessment
3 Hull Girder Shear Strength Assessment
SECTION 2
Hull Girder Ultimate Strength
1 Application
2 Checking Criteria
SECTION 3
Hull Girder Residual Strength
1 Application
2 Checking Criteria
APPENDIX 1
Direct Calculation of Shear Flow
1 Calculation Formula
2 Example of Calculations for a Single Side Hull Cross Section
APPENDIX 2
Hull Girder Ultimate Capacity
1 General
2 Incremental-Iterative Method
3 Alternative Methods

SECTION 1
HULL GIRDER YIELDING STRENGTH

SYMBOLS

For symbols not defined in this section, refer to Ch 1, Sec 4.

M_{sw} : Permissible hogging and sagging vertical still water bending moment in intact seagoing condition, in kNm, at the hull transverse section considered, defined in Ch 4, Sec 4, [2.2.2].

M_{sw-p} : Permissible hogging and sagging vertical still water bending moment for harbour/sheltered water operation, in kNm, at the hull transverse section considered, as defined in Ch 4, Sec 4, [2.2.3].

M_{sw-f} : Permissible hogging and sagging vertical still water bending moment in flooded condition at sea, in kNm, at the hull transverse section considered, as defined in Ch 4, Sec 4, [2.2.4].

M_{wv} : Vertical wave bending moment in seagoing condition, in kNm, in intact or flooded conditions at the hull transverse section considered, defined in Ch 4, Sec 4, [3.1.1].

M_{wh} : Horizontal wave bending moment, in kNm, at the hull transverse section considered, defined in Ch 4, Sec 4, [3.3.1].

Q_{sw} : Permissible positive or negative still water shear force for seagoing operation, in kN, at the hull transverse section considered, as defined in Ch 4, Sec 4, [2.3.3].

Q_{sw-p} : Permissible positive or negative still water shear force for harbour/sheltered operation, in kN, at the hull transverse section considered, as defined in Ch 4, Sec 4, [2.3.4].

Q_{sw-f} : Permissible positive or negative still water shear force for in flooded condition at sea, in kN, at the hull transverse section considered, as defined in Ch 4, Sec 4, [2.3.5].

Q_{wv} : Vertical wave shear force in seagoing condition, in kN, in intact or flooded conditions at the hull transverse section considered, defined in Ch 4, Sec 4, [3.2.1].

Q_{sw-Lcd} : Vertical still water shear force for the considered loading condition in seagoing operation, in kN, at the hull transverse section considered.

$Q_{sw-Lcd-p}$: Vertical still water shear force for the considered loading condition in harbour/sheltered operation, in kN, at the hull transverse section considered.

$Q_{sw-Lcd-f}$: Vertical still water shear force for the considered flooded condition in seagoing operation, in kN, at the hull transverse section considered.

x : X coordinate, in m, of the calculation point with respect to the reference coordinate system defined in Ch 1, Sec 4, [3.6].

V_D : Vertical distance to the equivalent deck line, in m, as defined in [1.4.3].

z : Z coordinate, in m, of the calculation point with respect to the reference coordinate system defined in Ch 1, Sec 4, [3.6].

z_n : Z coordinate, in m, of horizontal neutral axis of the hull transverse section with net scantling defined in [1.2], with respect to the reference coordinate system defined in Ch 1, Sec 4, [3.6].

I_{y-n50} : Net moment of inertia, in m^4, of the hull transverse section about its horizontal neutral axis, to be calculated according to [1.5].

I_{z-n50} : Net moment of inertia, in m^4, of the hull transverse section about its vertical neutral axis, to be calculated according to [1.5].

$Z_{A\text{-}n50}$: Net section modulus, in m^3, at any point of the hull transverse section, to be calculated according [1.4.1].

$Z_{B\text{-}n50}$, $Z_{D\text{-}n50}$: Net section moduli, in m^3, at bottom and deck, respectively, to be calculated according to [1.4.2] and [1.4.3].

z_{VD} : Z coordinate, in m, taken equal to $V_D + z_n$.

C_w : Wave parameter defined in Ch 4, Sec 4.

ρ : Seawater density, taken equal to 1.025 t/m^3.

f_β : Heading correction factor, to be taken as:

f_β = 1.05 for seagoing conditions.

f_β = 1.0 for ballast water exchange at sea, harbour/sheltered water and accidental flooded design load scenarios.

1 STRENGTH CHARACTERISTICS OF HULL GIRDER TRANSVERSE SECTIONS

1.1 General

1.1.1

This section specifies the criteria for calculating the hull girder strength characteristics to be used for the checks in [2] to [3], in association with the hull girder loads specified in Ch 4, Sec 4.

1.2 Hull girder transverse sections

1.2.1 General

Hull girder transverse sections are to be considered as being constituted by the members contributing to the hull girder longitudinal strength, i.e. all continuous longitudinal members below and including the strength deck defined in [1.3], taking into account the requirements in [1.2.2] to [1.2.13].

1.2.2 Net scantling

The members contributing to the hull girder longitudinal strength are to be considered using the net offered scantlings based on gross offered thickness reduced by 0.5 t_c, as defined in Ch 3, Sec 3, when the hull girder strength characteristics are used for the hull girder yielding check according to [2] to [3].

1.2.3 Structural members not contributing to hull girder sectional area

The following members are not to be considered in the calculation as they are considered not contributing to the hull girder sectional area:

- Superstructures which do not form a strength deck.
- Deckhouses.
- Vertically corrugated bulkheads, according to [1.2.7].
- Bulwarks and gutter plates.
- Bilge keels.
- Sniped or non-continuous longitudinal stiffeners.
- Non-continuous hatch coaming.

1.2.4 Continuous trunks and longitudinal continuous hatch coamings

Continuous trunks and longitudinal continuous hatch coamings may be included in the hull girder transverse sections, provided that they are effectively supported by longitudinal bulkheads or primary supporting members.

1.2.5 Longitudinal stiffeners or girders welded above the strength deck

Longitudinal stiffeners or girders welded above the strength deck, including the deck of any trunk fitted as specified in [1.2.4], are to be included in the hull girder transverse sections.

1.2.6 Longitudinal girders between hatchways, supported by longitudinal bulkheads

Where longitudinal girders, effectively supported by longitudinal bulkheads, are fitted between hatchways, the sectional area of these longitudinal girders are to be included in the hull girder transverse section.

1.2.7 Longitudinal bulkheads with vertical corrugations

For longitudinal bulkheads with vertical corrugations, the vertical corrugations are not to be included in the hull girder transverse section. Longitudinal bulkheads with vertical corrugations are not effective for hull girder bending, but they are effective for hull girder shear force.

1.2.8 Members in materials other than steel

Where a member contributing to the longitudinal strength is made in material other than steel with a Young's modulus, E equal to 2.06×10^5 N/mm^2, the steel equivalent sectional area that may be included in hull girder transverse section is obtained, in m^2, from the following formula:

$$A_{SE-n50} = \frac{E}{2.06 \times 10^5} A_{M-n50}$$

where:

A_{M-n50} : Sectional area, in m^2, of the member under consideration.

1.2.9 Definitions of openings

The following definitions of opening are to be applied:

a) Large openings are:

- Elliptical openings exceeding 2.5 m in length or 1.2 m in breadth.
- Circular openings exceeding 0.9 m in diameter.

b) Small openings (i.e. drain holes, etc) are openings that are not large ones.

c) Manholes.

d) Isolated openings are openings spaced not less than 1 m apart in the ship's transverse/vertical direction.

1.2.10 Large openings, manholes and nearby small openings

Large openings and manholes are to be deducted from the sectional area used in hull girder moment of inertia and section modulus. When small openings are spaced less than 1 m apart in the ship's transverse/vertical direction to large openings or manholes, the total breadth of them is to be deducted from the sectional area.

Additionally, isolated small openings which do not comply with the arrangement requirements given in Ch 3, Sec 6, [6.3.2] are to be deducted from the sectional areas included in the hull girder transverse sections.

1.2.11 Isolated small openings

Isolated small openings in one transverse section in the strength deck or bottom area need not be deducted from the sectional areas included in the hull girder transverse sections, provided that:

$\Sigma b_S \leq 0.06(B - \Sigma b)$

Σb_S : Total breadth of isolated small openings, in m, in the strength deck or bottom area at the transverse section considered, determined as indicated in Figure 1, not deducted from the section area as per [1.2.10].

Σb : Total breadth of large openings, in m, at the transverse section considered, determined as indicated in Figure 1, deducted from the section area as defined in [1.2.10].

Where the total breadth of isolated small openings Σb_s does not fulfil the above criteria, only the excess of breadth is to be deducted from the sectional areas included in the hull girder transverse sections.

Figure 1 : Calculation of Σb and Σb_s

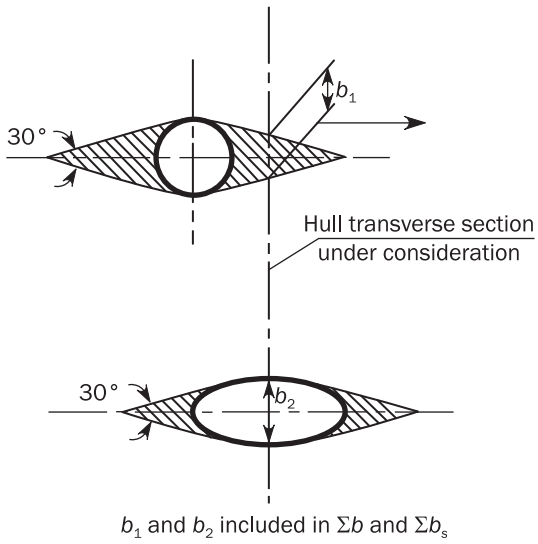

Figure 2 : Effective area in way of non-continuous decks and bulkheads

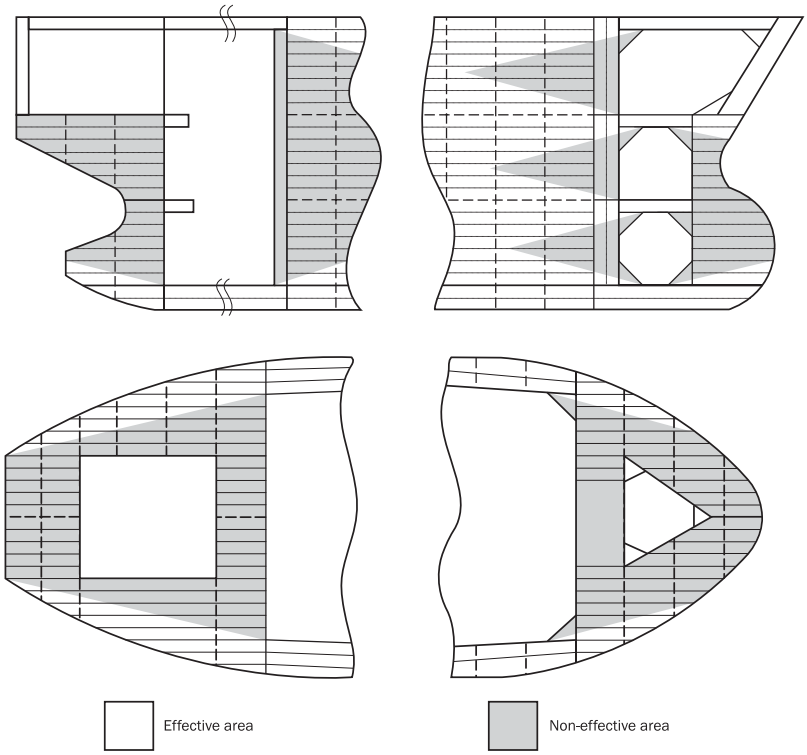

1.2.12 Lightening holes, draining holes and single scallops

Lightening holes, draining holes and single scallops in longitudinals need not be deducted if their height is less than 0.25 h_w, where h_w is the web height of the longitudinals, in mm. Otherwise, the excess is to be deducted from the sectional area or compensated.

1.2.13 Non-continuous decks and longitudinal bulkheads

When calculating the effective area in way of non-continuous decks and longitudinal bulkheads, the effective area is to be taken as shown in Figure 2. The shadow area, which indicates the ineffective area, is obtained by drawing two tangent lines with an angle of 15 deg to the longitudinal axis of the ship.

1.3 Strength deck

1.3.1

The strength deck is, in general, the uppermost continuous deck. In the case of a superstructure or deckhouses contributing to the longitudinal strength, the strength deck is the deck of the superstructure or the deck of the uppermost deckhouse.

1.4 Section modulus

1.4.1 Section modulus at any point

The section modulus at any point of a hull transverse section is obtained, in m^3, from the following formula:

$$Z_{A-n50} = \frac{I_{y-n50}}{|z - z_n|}$$

1.4.2 Section modulus at bottom

The section modulus at bottom is obtained, in m^3, from the following formula:

$$Z_{B-n50} = \frac{I_{y-n50}}{z_n}$$

1.4.3 Section modulus at deck

The section modulus at equivalent deck line is obtained, in m^3, from the following formula:

$$Z_{D-n50} = \frac{I_{y-n50}}{V_D}$$

where:

V_D : Vertical distance of the equivalent deck line, in m, taken equal to:

When no effective longitudinal members specified in [1.2.4] and [1.2.5] are positioned above a line extending from strength deck at side to a position $(z_D - z_n)/0.9$ from the neutral axis at the centreline

$$V_D = z_D - z_n$$

When effective longitudinal members as specified in [1.2.4] and [1.2.5] are positioned above a line extending from strength deck at side to a position $(z_D - z_n)/0.9$ from the neutral axis at the centreline

$$V_D = (z_T - z_n)\left(0.9 + 0.2\frac{y_T}{B}\right) \geq z_D - z_n$$

z_D : Z coordinate, in m, of strength deck at side, defined in [1.3].

y_T, z_T : Y and Z coordinates, in m, of the top of continuous trunk, hatch coaming, longitudinal stiffeners or girders, to be measured for the point which maximises the value of V_D.

1.5 Moments of inertia

1.5.1

The net moment of inertia, $I_{y\text{-}n50}$ and $I_{z\text{-}n50}$, in m^4, are those, calculated about the horizontal and vertical neutral axes, respectively, of the hull transverse sections defined in [1.2].

2 HULL GIRDER BENDING ASSESSMENT

2.1 General

2.1.1

Scantlings of all continuous longitudinal members of the hull girder based on moment of inertia and section modulus requirement in [2.3] are to be maintained within 0.4 *L* amidships.

2.1.2

The *k* material factors are to be defined with respect to the materials used for the bottom and deck members contributing to the longitudinal strength according to [1]. When material factors for higher strength steels are used, the requirements in [2.4] apply.

2.2 Normal stresses

2.2.1

The normal stress, σ_L induced by vertical bending moments, is to be assessed for both hogging and sagging conditions, along the full length of the hull girder, from AE to FE.

The normal stress, σ_L at any point of the hull transverse section located below z_{VD} is to comply with the following formula:

$\sigma_L \leq \sigma_{perm}$

where:

σ_L : Normal stress, in N/mm^2, as defined in [2.2.2].

σ_{perm} : Permissible hull girder bending stress, in N/mm^2, as given in Table 1.

2.2.2

The normal stresses, σ_L in N/mm^2, induced by vertical bending moments are given in Table 2.

2.2.3

The normal stresses in a member made in material other than steel with a Young's modulus, *E* equal to 2.06×10^5 N/mm^2, included in the hull girder transverse sections as specified in [1.2.8], are obtained from the following formula:

$$\sigma_L = \frac{E}{2.06 \times 10^5} \sigma_{Ls}$$

where:

σ_{LS} : Normal stress, in N/mm^2, in the member under consideration, calculated according to [2.2.2] considering this member as having the steel equivalent sectional area A_{SE} defined in [1.2.8].

2.3 Minimum net moment of inertia and net section modulus at midship section

2.3.1

At the transverse section in the midship part, the net moment of inertia about the horizontal axis, $I_{y\text{-}n50}$ is to be not less than the value obtained, in m^4, from the following formula:

$$I_{yR} = 2.7\ C_w\ L^3\ B\,(C_B + 0.7)\ 10^{-8}$$

Table 1 : Permissible hull girder bending stress

Operation	Design load	Permissible hull girder bending stress, σ_{perm}				
		$\frac{x}{L} \le 0.1$	$0.1 < \frac{x}{L} < 0.3$	$0.3 \le \frac{x}{L} \le 0.7$	$0.7 < \frac{x}{L} < 0.9$	$\frac{x}{L} \ge 0.9$
Seagoing	(S+D)	140/k	Linear interpolation	190/k	Linear interpolation	140/k
Harbour/sheltered water	(S)	105/k	Linear interpolation	143/k	Linear interpolation	105/k
Flooded condition at sea for bulk carriers having a length L of 150 m or above	(A:S+D)	140/k	Linear interpolation	190/k	Linear interpolation	140/k

Table 2 : Normal stress, σ_L

Operation	Normal stress, σ_L		
	At any point located below Z_{VD}	At bottom (1)	At deck (1)
Seagoing	$\sigma_L = \frac{M_{sw} + f_\beta\ M_{wv}}{Z_{A-n50}} 10^{-3}$	$\sigma_L = \frac{M_{sw} + f_\beta\ M_{wv}}{Z_{B-n50}} 10^{-3}$	$\sigma_L = \frac{M_{sw} + f_\beta\ M_{wv}}{Z_{D-n50}} 10^{-3}$
Harbour/sheltered water	$\sigma_L = \frac{M_{sw-p}}{Z_{A-n50}} 10^{-3}$	$\sigma_L = \frac{M_{sw-p}}{Z_{B-n50}} 10^{-3}$	$\sigma_L = \frac{M_{sw-p}}{Z_{D-n50}} 10^{-3}$
Flooded condition at sea for bulk carriers having a length L of 150 m or above	$\sigma_L = \frac{M_{sw-f} + M_{wv}}{Z_{A-n50}} 10^{-3}$	$\sigma_L = \frac{M_{sw-f} + M_{wv}}{Z_{B-n50}} 10^{-3}$	$\sigma_L = \frac{M_{sw-f} + M_{wv}}{Z_{D-n50}} 10^{-3}$
(1) The σ_L values at bottom and deck, correspond to the application of formula given for any point, calculated at equivalent deck line and at baseline.			

2.3.2

At the transverse section in the midship part, the vertical hull girder net section modulus at the deck and the bottom, $Z_{D\text{-}n50}$ and $Z_{B\text{-}n50}$, are not to be less than the value obtained, in m^3, from the following formula:

$$Z_R = 0.9k\ C_w\ L^2\ B\,(C_B + 0.7)\ 10^{-6}$$

2.4 Extent of high tensile steel

2.4.1 Vertical extent

The vertical extent of higher strength steel, $z_{hts,i}$, in m, used in the deck zone or bottom zone and measured respectively from the moulded deck line at side or baseline is not to be taken less the value obtained from the following formula, see Figure 3:

$$z_{hts,\,i} = z_1\left(1 - \frac{\sigma_{perm,\,i}}{\sigma_L}\right)$$

where:

z_1 : Distance from horizontal neutral axis to moulded deck line or baseline respectively, in m.

$\sigma_{perm,i}$: Permissible hull girder bending stress of the considered steel, in N/mm^2, as given in Table 1 and Figure 3.

σ_L : Hull girder bending stress, σ_{dk} at moulded deck line or σ_{bl} at baseline respectively, in N/mm^2 given in Table 3.

Table 3 : Hull girder stresses at baseline and moulded deck line

Operation	At baseline	At moulded deck line
Seagoing	$\sigma_{bl} = \frac{\lvert M_{sw} + f_\beta\, M_{wv}\rvert}{I_{y-n50}} z_n\, 10^{-3}$	$\sigma_{dk} = \frac{\lvert M_{sw} + f_\beta\, M_{wv}\rvert}{I_{y-n50}} (z_{dk-s} - z_n)\, 10^{-3}$
Harbour/sheltered water	$\sigma_{bl} = \frac{\lvert M_{sw-p}\rvert}{I_{y-n50}} z_n\, 10^{-3}$	$\sigma_{dk} = \frac{\lvert M_{sw-p}\rvert}{I_{y-n50}} (z_{dk-s} - z_n)\, 10^{-3}$
Flooded condition at sea for bulk carriers having a length L of 150 m or above	$\sigma_{bl} = \frac{\lvert M_{sw-f} + M_{wv}\rvert}{I_{y-n50}} z_n\, 10^{-3}$	$\sigma_{dk} = \frac{\lvert M_{sw-f} + M_{wv}\rvert}{I_{y-n50}} (z_{dk-s} - z_n)\, 10^{-3}$
$z_{dk\text{-}s}$: Distance from baseline to moulded deck line at side, in m.		

Figure 3 : Vertical extent of higher strength steel

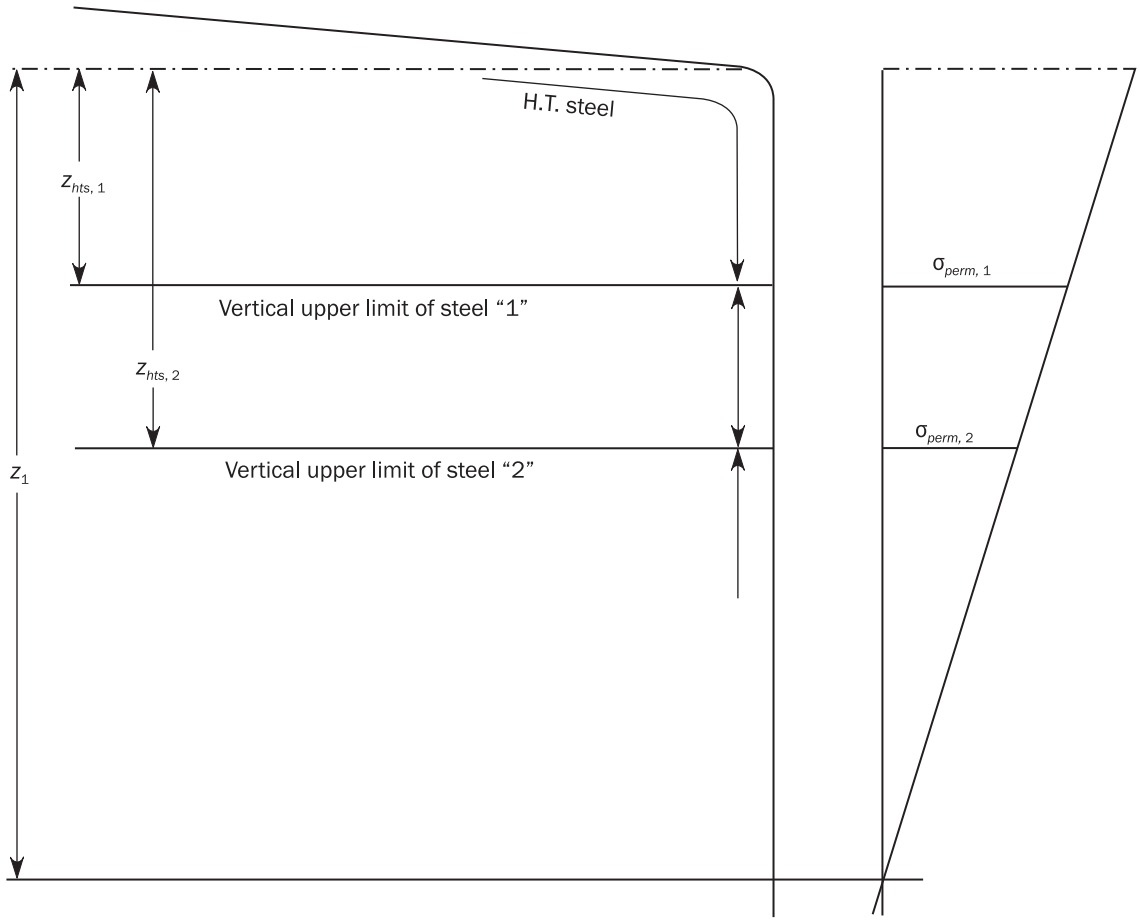

2.4.2 Longitudinal extent

Where used, the application of higher strength steel is to be continuous over the length of the ship to the location where the longitudinal stress levels are within the allowable range for mild steel structure, as shown in Figure 4.

Figure 4 : Longitudinal extent of higher strength steel

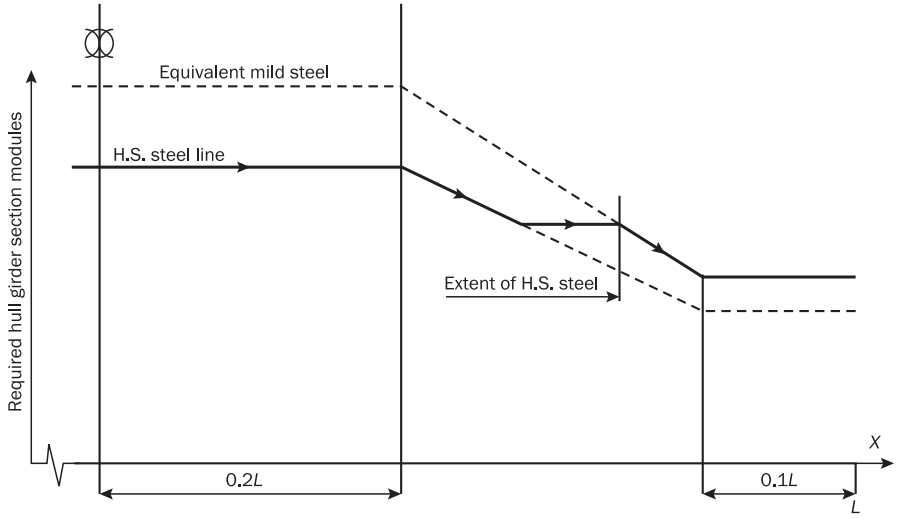

3 HULL GIRDER SHEAR STRENGTH ASSESSMENT

3.1 General

3.1.1

The hull girder shear strength requirements apply along the full length of the hull girder, from AE to FE.

3.2 Hull girder shear capacity

3.2.1

The total vertical hull girder shear capacity, Q_R in kN, is the minimum of the calculated values for all plates *i* contributing to the hull girder shear of the considered transverse section and is to be taken as:

$$Q_R = \min_i \left(\frac{\tau_{i-perm} \cdot t_{i-n50}}{q_{vi}} \cdot 10^{-3} \right)$$

where:

t_{i-n50} : Net thickness of plate *i*, in mm. For longitudinal bulkheads between cargo tanks of oil tankers, t_{i-n50} is to be taken as $t_{sfi-n50}$ (see [3.4.1]) and $t_{sti-k-n50}$ (see [3.5.1]) as appropriate.

q_{vi} : Contribution ratio for hull girder shear force per mm, in mm^{-1}, for the plate *i* based on net scantlings with deduction of 0.5 t_c, which is equal to the unit shear flow per mm, in N/mm, obtained from a numerical calculation based on thin-walled beam theory according to Ch 5, App 1.

τ_{i-perm} : Permissible shear stress, in N/mm^2, as given in Table 4, for plate *i*.

Table 4 : Permissible hull girder shear stress

Operation	Design load	Permissible hull girder shear, $\tau_{l\text{-}perm}$
Seagoing	(S+D)	120/*k*
Harbour/sheltered water	(S)	105/*k*
Flooded condition at sea of bulk carriers having a length *L* of 150 m or above	(A:S+D)	120/*k*

3.3 Acceptance criteria

3.3.1 Permissible vertical shear force

The positive and negative permissible vertical shear forces are to comply with the following criteria:

- For seagoing operation:

  $$|Q_{sw}| \le Q_R - |f_\beta \; Q_{wv}|$$

- For harbour/sheltered water operation:

  $$|Q_{sw-p}| \le Q_R$$

- For flooded condition at sea of bulk carriers having a length *L* of 150 m or above:

  $$|Q_{sw-f}| \le Q_R - |Q_{wv}|$$

where:

Q_R : Total vertical hull girder shear capacity, in kN, as defined in [3.2.1].

The shear force Q_{wv}, used in 2 above criteria is to be taken with the same sign as the considered shear forces Q_{sw}, and $Q_{sw\text{-}f}$ respectively.

3.3.2 Vertical still water shear force

The vertical still water shear forces, in kN, for all loading conditions are to comply with the following criteria:

- For seagoing operation:

  $$|Q_{sw-Lcd} - \Delta Q_{mdf}| \le |Q_{sw}|$$

- For harbour/sheltered water operation:

  $$|Q_{sw-Lcd-p} - \Delta Q_{mdf}| \le |Q_{sw-p}|$$

- For flooded condition at sea of bulk carriers having a length *L* of 150 m or above:

  $$|Q_{sw-Lcd-f} - \Delta Q_{mdf}| \le |Q_{sw-f}|$$

where:

ΔQ_{mdf} : Shear force correction at the transverse section considered, in kN, taken as:

- For bulk carriers, the value defined in [3.6.1].
- For oil tankers, ΔQ_{mdf} = 0.

The permissible shear forces Q_{sw}, $Q_{sw\text{-}p}$ and $Q_{sw\text{-}f}$ are to be taken with the same sign as the considered shear forces $Q_{sw\text{-}Lcd}$, $Q_{sw\text{-}Lcd\text{-}p}$ and $Q_{sw\text{-}Lcd\text{-}f}$ respectively.

3.4 Effective net thickness for longitudinal bulkheads between cargo tanks of oil tankers

3.4.1

For longitudinal bulkheads between cargo tanks, the net thickness of the plating above the inner bottom, $t_{sfi\text{-}n50}$ for plate *i*, in mm, is given by:

$$t_{sfi-n50} = t_{i-n50} - t_{\Delta i}$$

where:

$t_{\Delta i}$: Thickness deduction for plate *i*, in mm, as defined in [3.4.2].

3.4.2

The vertical distribution of thickness reduction for shear force correction is to be triangular as indicated in Figure 5. The thickness deduction, $t_{\Delta i}$ in mm, to account for shear force correction on the plate *i*, is to be taken as:

$$t_{\Delta i} = \frac{\delta Q_3}{h_{blk}\,\tau_{i-perm}}\left(1 - \frac{x_{blk}}{0.5\,\ell_{tk}}\right)\left(2 - \frac{2(z_p - h_{db})}{h_{blk}}\right)$$

where:

δQ_3 : Shear force correction for longitudinal bulkhead as defined in [3.4.3] and [3.4.4] for ships with one or two longitudinal bulkheads respectively, in kN.

ℓ_{tk} : Length of cargo tank, in m.

h_{blk} : Height of longitudinal bulkhead, in m, defined as the distance from inner bottom to the deck at the top of the bulkhead, as shown in Figure 5.

x_{blk} : Minimum longitudinal distance from section considered to the nearest cargo tank transverse bulkhead, in m. To be taken positive and not greater than 0.5 ℓ_{tk}.

z_p : Vertical distance from the lower edge of plate *i* to the base line, in m, but not taken less than h_{db}.

h_{db} : Height of double bottom, in m, as shown in Figure 5.

$\tau_{i\text{-}perm}$: Permissible hull girder shear stress, in N/mm^2, for plate *i*:

$\tau_{i\text{-}perm}$ = 120/k.

Figure 5 : Shear force correction for longitudinal bulkheads

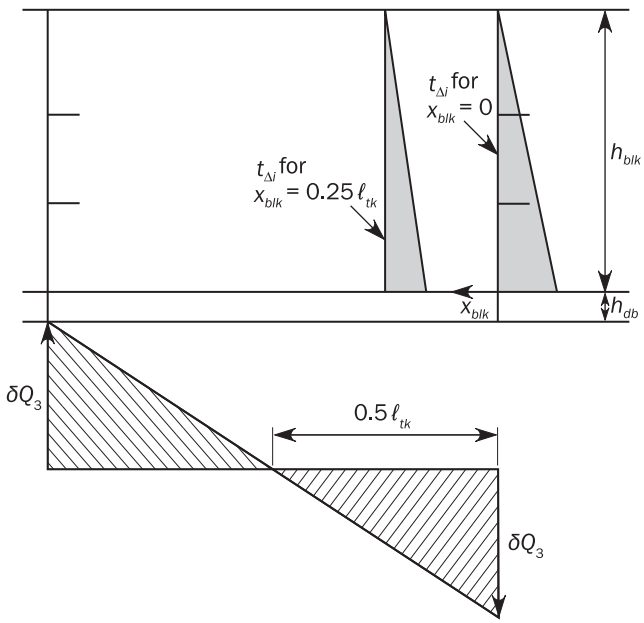

3.4.3 Shear force correction for a ship with a centreline longitudinal bulkhead

For ships with a centreline longitudinal bulkhead, the shear force correction in way of transverse bulkhead, δQ_3, in kN, is to be obtained from the following formula:

$$\delta Q_3 = 0.5\, K_3\, F_{db}$$

where:

F_{db} : Maximum resulting force on the double bottom in a tank, in kN, as defined in [3.4.5].

K_3 : Correction factor, to be taken equal to:

$$K_3 = 0.4 \cdot \left(1 - \frac{1}{1+n}\right) - f_3$$

n : Number of floors between transverse bulkheads.

f_3 : Shear force distribution factor, as defined in Table 7.

3.4.4 Shear force correction for a ship with two longitudinal bulkheads between the cargo tanks

For ships with two longitudinal bulkheads between the cargo tanks, the shear force correction, δQ_3 in kN, is to be obtained from the following formula:

$$\delta Q_3 = 0.5\, K_3\, F_{db}$$

where:

F_{db} : Maximum resulting force on the double bottom in a tank, in kN, as defined in [3.4.5].

K_3 : Correction factor, to be taken equal to:

$$K_3 = 0.5 \cdot \left(1 - \frac{1}{1+n}\right)\left(\frac{1}{r+1}\right) - f_3$$

where:

n : Number of floors between transverse bulkheads.

r : Ratio of the part load carried by the wash bulkheads and floors from longitudinal bulkhead to the double side taken as:

$$r = \frac{1}{\left[\dfrac{A_{3-n50}}{A_{1-n50} + A_{2-n50}} + \dfrac{2 \times 10^4\, b_{80}\,(n_s + 1)\, A_{3-n50}}{\ell_{tk}\,(n_s\, A_{T-n50} + R)}\right]}$$

ℓ_{tk} : Length of cargo tank, between transverse bulkheads in the side cargo tank, in m.

b_{80} : 80% of the distance from longitudinal bulkhead to the inner hull longitudinal bulkhead, in m, at tank mid length.

$A_{T\text{-}n50}$: Net shear area of the transverse wash bulkhead, including the double bottom floor directly below, in the side cargo tank, in cm^2, taken as the smallest area in a vertical section.

$A_{1\text{-}n50}$, $A_{2\text{-}n50}$, $A_{3\text{-}n50}$: Net areas, as defined in Table 7, in m^2.

f_3 : Shear force distribution factor, as defined in Table 7.

n_S : Number of wash bulkheads in the side cargo tank.

R : Total efficiency of the transverse primary supporting members in the side tank in cm^2.

$$R = \left(\frac{n - n_s}{2} - 1\right)\frac{A_{Q-n50}}{\gamma}$$

$$\gamma = 1 + \frac{300\, b_{80}{}^2\, A_{Q-n50}}{I_{psm-n50}}$$

$A_{Q\text{-}n50}$: Net shear area, in cm^2, of a transverse primary supporting member in the wing cargo tank, taken as the sum of the net shear areas of floor, cross ties and deck transverse webs. The net shear area is to be calculated at the mid span of the members.

$I_{psm\text{-}n50}$: Net moment of inertia for transverse primary supporting members, in cm^4, in the wing cargo tank, taken as the sum of the moments of inertia of transverses and cross ties. The net moment of inertia is to be calculated at the mid span of the member including an attached plate width equal to the primary supporting member spacing.

3.4.5 Vertical force on double bottom

The maximum vertical resulting force on the double bottom in a tank, F_{db} is in no case to be less than that given by the minimum conditions given in Table 5.

The maximum resulting force on the double bottom in a tank, F_{db} in kN, is to be taken as:

$$F_{db} = g\left|W_{CT} + W_{CWBT} - \rho\ b_2\ \ell_{tk}\ T_{mean}\right|$$

where:

W_{CT} : Weight of cargo, in tonnes, as defined in Table 6.

W_{CWBT} : Weight of ballast, in tonnes, as defined in Table 6.

b_2 : Breadth, in m, as defined in Table 6.

ℓ_{tk} : Length of cargo tank, in m.

T_{mean} : Draught at the mid length of the tank for the loading condition considered, in m.

Table 5 : Minimum conditions for double bottom

Structural configuration	Positive/negative force, F_{db}	Minimum condition
Ships with centreline bulkhead	Max positive net vertical force, F_{db+}	0.9 T_{sc} and empty cargo tanks and ballast tanks
	Max negative net vertical force, F_{db-}	0.6 T_{sc} and full cargo tanks and empty ballast tanks
Ships with two longitudinal bulkheads	Max positive net vertical force, F_{db+}	0.9 T_{sc} and empty cargo tanks and ballast tanks
	Max negative net vertical force, F_{db-}	0.6 T_{sc} and full centre cargo tank and empty ballast tanks

Table 6 : Desig'n conditions for double bottom

Structural configuration	W_{CT}	W_{CWBT}	b_2
Ships with centreline bulkhead	Weight of cargo in cargo tanks, in tonnes, using a minimum density of 1.025 t/m^3.	Weight of ballast between port and starboard inner sides, in t.	Maximum breadth between port and starboard inner sides at mid length of tank, in m, as shown in Figure 6.
Ships with two longitudinal bulkheads	Weight of cargo in the centre tank, in tonnes, using a minimum density of 1.025 t/m^3.	Weight of ballast below the centre cargo tank, in t.	Maximum breadth of the centre cargo tank at mid length of tank, in m, as shown in Figure 6.

Figure 6 : Tank breadth b_2

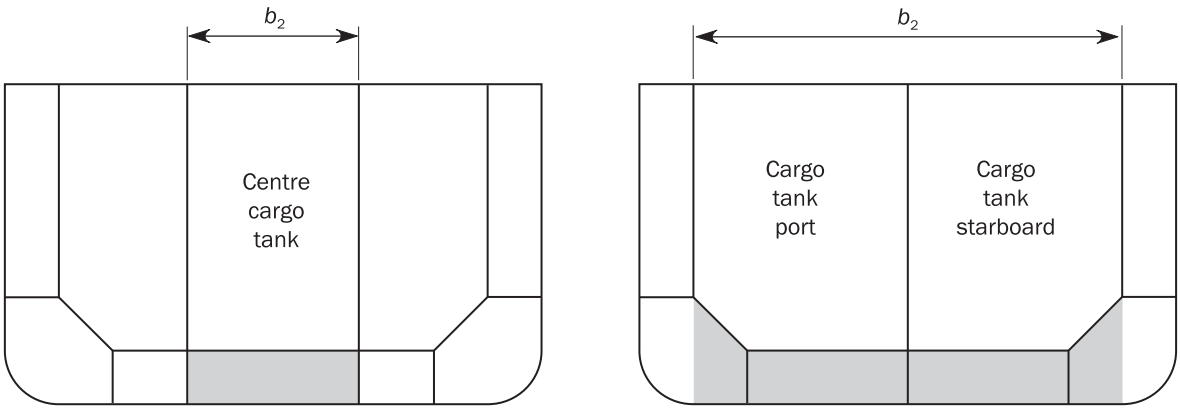

Table 7 : Shear force distribution factor for oil tanker

Hull configuration	f_3 factor
One centreline bulkhead 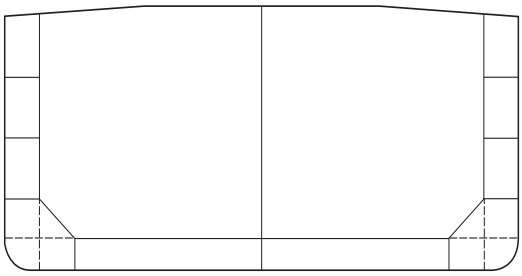	$f_3 = 0.504 - 0.076 \frac{A_{1-n50}}{A_{2-n50}} - 0.156 \frac{A_{2-n50}}{A_{3-n50}}$
Two longitudinal bulkheads 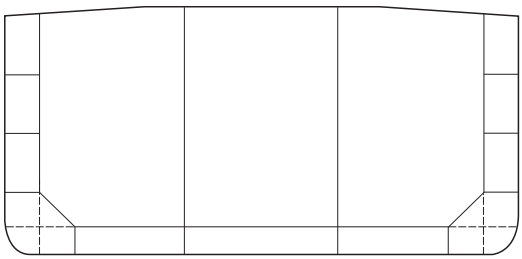	$f_3 = 0.353 - 0.049 \frac{A_{1-n50}}{A_{2-n50}} - 0.095 \frac{A_{2-n50}}{A_{3-n50}}$

where:

A_{1-n50}, A_{2-n50}, A_{3-n50}: Net projected area onto the vertical plane based on net thickness, t_{n50}, of the side shell, inner hull or the longitudinal bulkhead respectively, at one side of the section under consideration.

The area A_{1-n50} includes the net plating area of the side shell, including the bilge.

The area A_{2-n50} includes the net plating area of the inner hull, including the hopper side and the outboard girder under.

The Area A_{3-n50} includes the net plating area of the longitudinal bulkheads, including the double bottom girders in line. The area A_{3-n50} for the centreline bulkhead is not to be reduced for symmetry around the centreline. When the longitudinal bulkhead is made with corrugation, A_{3-n50} is to consider the equivalent net thickness of the corrugation as defined in [3.4.6].

3.4.6 Equivalent net thickness of corrugation

The equivalent net thickness, in mm, of the corrugation of vertical and horizontal corrugated bulkheads, $t_{cor-n50}$, to be used for the calculation of the effective net shear area and for the unit shear flow, is given as follows:

$$t_{cor-n50} = \frac{t_{w-gr} + t_{f-gr}}{2} \cdot \frac{s_c}{c+a} - 0.5t_c$$

where:

$t_{w\text{-}gr}$: Gross corrugation web thickness, in mm.

$t_{f\text{-}gr}$: Gross corrugation flange thickness, in mm.

s_c : Projected length of one corrugation, in mm, as defined in Ch 3, Sec 6, Figure 21.

c : Breadth of corrugation web, in mm, as defined in Ch 3, Sec 6, Figure 21.

a : Breadth of corrugation flange, in mm, as defined in Ch 3, Sec 6, Figure 21.

3.5 Effective net thickness for longitudinal bulkheads between cargo tanks of oil tankers - Correction due to loads from transverse bulkhead stringers

3.5.1

In way of transverse bulkhead stringer connections, within areas as specified in Figure 8, the equivalent net thickness of plate, $t_{sti\text{-}k\text{-}n50}$ in mm, where the index k refers to the identification number of the stringer, is not to be taken greater than:

$$t_{sti-k-n50} = t_{sfi-n50}\left(1 - \frac{\tau_{sti-k}}{\tau_{i-perm}}\right)$$

where:

$\tau_{sti\text{-}k}$: Shear stress in plate i, in N/mm^2, in the longitudinal bulkhead due to the stringer force in way of stringer k, taken as:

$$\tau_{sti-k} = \frac{Q_{st-k}}{\ell_{st-k}\, t_{sfi-n50}}$$

$t_{sfi\text{-}n50}$: Effective net plating thickness as defined in [3.4.1], in mm, calculated at the transverse bulkhead for the height corresponding to the level of the stringer.

$\tau_{i\text{-}perm}$: Permissible hull girder shear stress, in N/mm^2, for the plate i:

$\tau_{i\text{-}perm}$ = 120/k

$\ell_{st\text{-}k}$: Connection length of stringer k, in m, as defined in Figure 7.

$Q_{st\text{-}k}$: Shear force on the longitudinal bulkhead from the stringer in loaded condition with tanks abreast full in kN, taken as:

$$Q_{st-k} = 0.8\, F_{st-k}\left(1 - \frac{z_{st-k} - h_{db}}{h_{blk}}\right)$$

$F_{st\text{-}k}$: Total stringer supporting force in way of a longitudinal bulkhead, in kN, taken as:

$$F_{st-k} = \frac{P_{st-k}\, b_{st-k}(h_k + h_{k-1})}{2}$$

h_{db} : Double bottom height, in m.

h_{blk} : Height of bulkhead, in m, defined as the distance from inner bottom to the deck at the top of the bulkhead.

$z_{st\text{-}k}$: Z coordinate of the stringer k, in m.

$P_{st\text{-}k}$: Pressure on stringer k, in kN/m^2, taken as:.

$$P_{st-k} = g\, \rho_L\, h_{tt-k}$$

ρ_L : Density of the liquid in cargo tank, in t/m^3, ad defined in Ch 4, Sec 6.

$h_{tt\text{-}k}$: Height from the top of the tank to the midpoint of the load area between $h_k/2$ below and $h_{k\text{-}1}/2$ above the stringer k, in m.

h_k : Vertical distance from the considered stringer k to the stringer k+1 below. For the lowermost stringer, it is to be taken as 80% of the average vertical distance to the inner bottom, in m.

h_{k-1} : Vertical distance from the considered stringer k to the stringer k-1 above. For the uppermost stringer, it is to be taken as 80% of the average vertical distance to the upper deck, in m.

b_{st-k} : Load breadth acting on stringer k, in m, as defined in Figure 9 and Figure 10.

3.5.2

Where reinforcement is provided to meet the above requirement, the reinforced area based on the maximum value of $t_{sti-k-n50}$ is to extend longitudinally for the full length of the stringer connection and a minimum of one frame spacing forward and aft of the bulkhead. The reinforced area is to extend vertically from above the stringer level and down to 0.5 h_k below the stringer, where h_k, the vertical distance from the considered stringer to the stringer below is as defined in [3.5.1]. For the lowermost stringer the maximum plate thickness requirement, $t_{sti-k-n50}$ is to extend down to the inner bottom, see Figure 8.

Figure 7 : Effective connection length of stringer

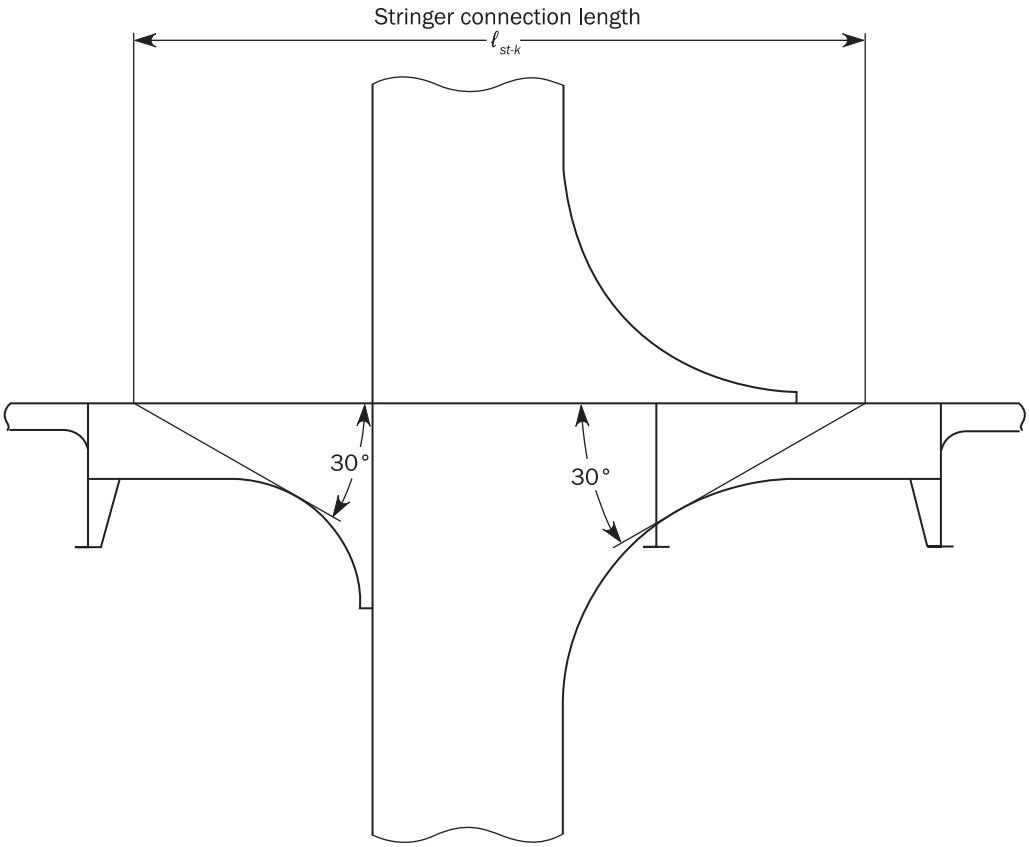

Figure 8 : Region for stringer correction, t_i, for ships with 3 stringers

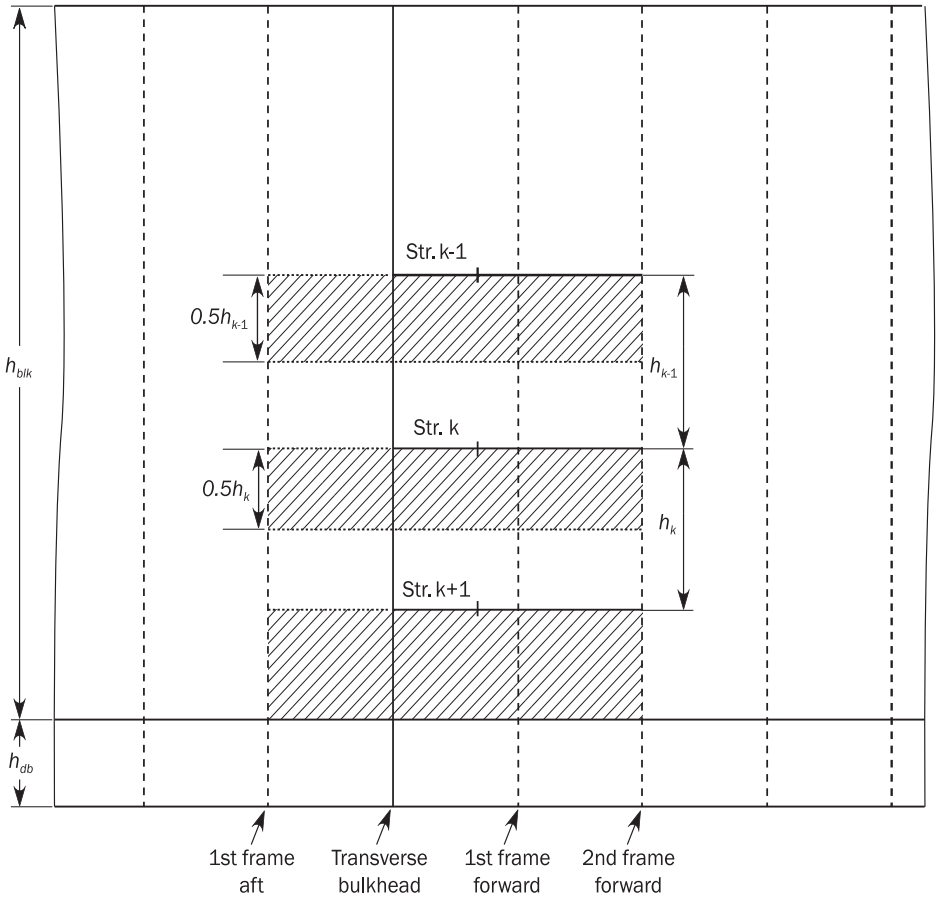

Figure 9 : Load breadth of stringers for ships with a centreline bulkhead

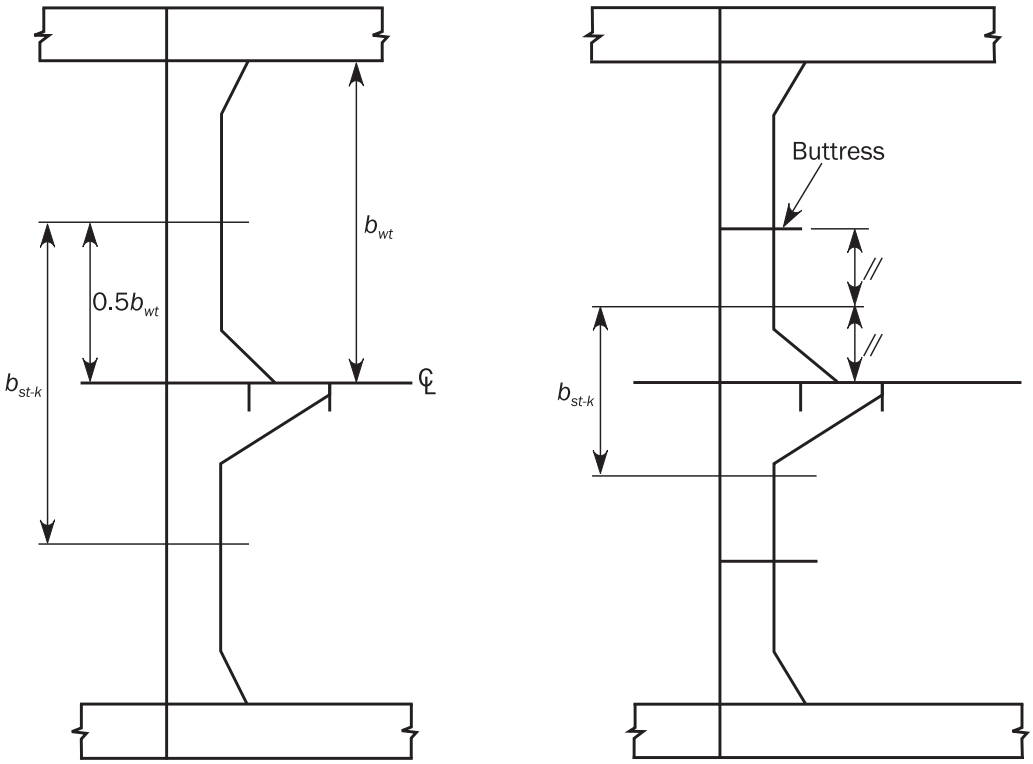

Figure 10 : Load breadth of stringers for ships with 2 inner longitudinal bulkheads

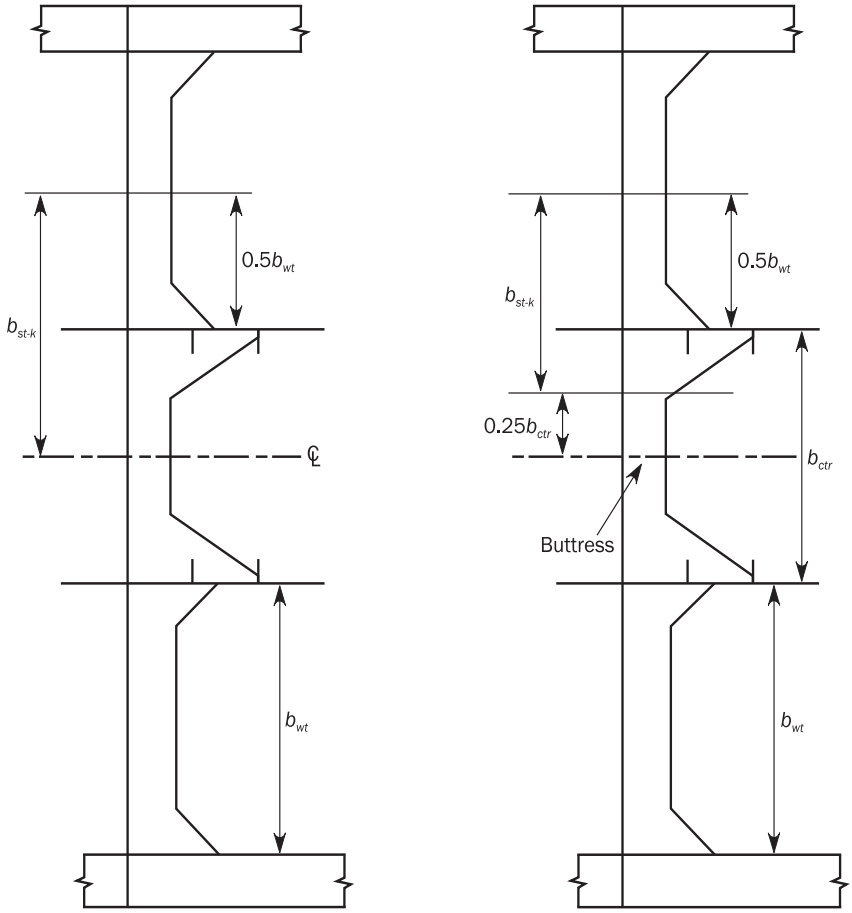

In this figure:
b_{wt} is the breadth of wing cargo tank, in m.
b_{ctr} is the breadth of centre cargo tank, in m.

3.6 Shear force correction for bulk carriers

3.6.1

When hull girder shear strength assessment is performed in accordance with [3], shear force correction, which takes into account the portion of loads transmitted by the double bottom longitudinal girders to the transverse bulkheads, is to be considered.

For the considered cargo hold, the shear force correction at the considered transverse section is to be obtained, in kN, from the following formula:

$$\Delta Q_{mdf} = C_d \alpha \left(\frac{M}{B_H \ \ell_H} - \rho T_{LC,mh} \right)$$

where:

C_d : Distribution coefficient taken as:

- C_d = -1 at the aft end of the considered cargo hold except for aftmost cargo hold.
- C_d = 1 at the fore end of the considered cargo hold except for foremost cargo hold.
- C_d = 0 at mid-length of the cargo hold.
- C_d = 0 at the aft bulkhead of the aftmost cargo hold.
- C_d = 0 at the fore bulkhead of the foremost cargo hold.
- C_d : Linearly distributed at other locations.

α : Coefficient taken as:

$$\alpha = g \frac{\ell_o b_o}{2 + \varphi \frac{\ell_o}{b_o}}$$

M : Mass, in t, in the hold in way of the considered transverse section for the considered loading condition. M is to include the mass of ballast water and fuel oil located directly below the flat portion of the inner bottom, if any, excluding the portion under the bulkhead stool.

B_H : Breadth of the cargo hold, in m, as defined in Ch 4, Sec 6.

ℓ_H : Length of the cargo hold, in m, as defined in Ch 4, Sec 6.

ℓ_o, b_o : Length and breadth, respectively, in m, of the flat portion of the double bottom in way of the hold considered; b_o is to be measured on the hull transverse section at the middle of the hold.

$$\varphi = 1.38 + 1.55 \frac{\ell_o}{b_o}$$, but not greater than 3.7.

$T_{LC,mh}$: Draught, in m, measured vertically on the hull transverse section at the middle of the hold considered, from the moulded baseline to the waterline in the loading condition considered.

ΔQ_{CF} : Shear force correction for the full hold.

ΔQ_{CE} : Shear force correction for the empty hold.

Figure 11 : Shear force correction, ΔQ_c

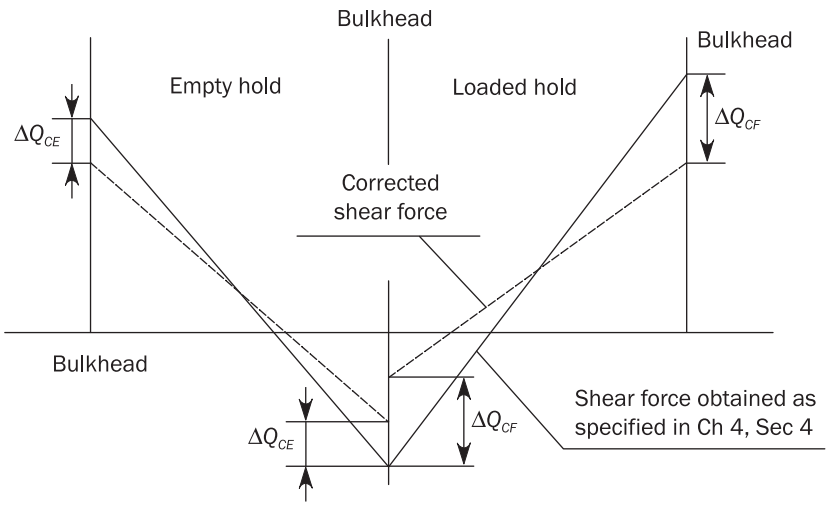

SECTION 2
HULL GIRDER ULTIMATE STRENGTH

SYMBOLS

For symbols not defined in this section, refer to Ch 1, Sec 4

$M_{sw\text{-}h}$,$M_{sw\text{-}s}$: Permissible hogging and sagging vertical still water bending moment in intact seagoing condition, in kNm, at the hull transverse section considered, defined in Ch 4, Sec 4, [2.2.2].

$M_{sw\text{-}p\text{-}h}$, $M_{sw\text{-}p\text{-}s}$: Permissible hogging and sagging vertical still water bending moment for harbour/sheltered water operation, in kNm, at the hull transverse section considered, as defined in Ch 4, Sec 4, [2.2.3].

$M_{sw\text{-}f}$: Permissible hogging and sagging vertical still water bending moment in flooded condition at sea, in kNm, at the hull transverse section considered, as defined in Ch 4, Sec 4, [2.2.4].

1 APPLICATION

1.1 General

1.1.1

The requirements of this section apply to ships equal to or greater than 150 m in length *L*.

1.1.2

The hull girder ultimate strength is to be assessed through the cargo hold region and machinery space.

1.1.3

The hull girder ultimate bending capacity is to be checked to ensure that it satisfies the checking criteria given in [2]. Such checking criteria are applicable to intact ship structures in the following conditions:

- For bulk carriers: seagoing, harbour/sheltered water and flooded conditions.
- For oil tankers: seagoing and harbour/sheltered water conditions.

2 CHECKING CRITERIA

2.1 General

2.1.1

The vertical hull girder ultimate bending capacity is to be checked for hogging and sagging conditions, for the following design load scenarios, as defined in Table 1:

- For bulk carriers: design load scenario A, for seagoing, harbour/sheltered water and flooded conditions.
- For oil tankers: design load scenario A, for seagoing and harbour/sheltered water conditions; and design load scenario B, for the operational seagoing homogeneous full load condition.

Table 1 : Design load scenarios

Design load scenarios		Permissible still water bending moment, M_{sw-U}
A	S+D	M_{sw-h} or M_{sw-s}
	S	M_{sw-p-h} or M_{sw-p-s}
	A: S+D	M_{sw-f}
B	S+D	Maximum sagging still water bending moment for operational seagoing homogeneous full load condition (1)
(1) The maximum still water bending moment is to be taken from the departure condition with the ship homogeneously loaded at maximum draught and corresponding arrival and any mid-voyage conditions.		

2.1.2

The vertical hull girder ultimate bending capacity at any hull transverse section is to satisfy the following criteria:

$$M \leq \frac{M_U}{\gamma_R}$$

where:

M : Vertical bending moment, in kNm, to be obtained as specified in [2.2.1].

M_U : Vertical hull girder ultimate bending capacity, in kNm, to be obtained as specified in [2.3].

γ_R : Partial safety factor for the vertical hull girder ultimate bending capacity to be taken equal to:

$\gamma_R = \gamma_M \gamma_{DB}$

γ_M : Partial safety factor for the vertical hull girder ultimate bending capacity, covering material, geometric and strength prediction uncertainties; in general, to be taken equal to:

$\gamma_M = 1.1$

γ_{DB} : Partial safety factor for the vertical hull girder ultimate bending capacity, covering the effect of double bottom bending, to be taken equal to:

- For hogging condition, except flooded conditions:
  - $\gamma_{DB} = 1.25$ for empty cargo holds in alternate condition of BC-A bulk carriers,
  - $\gamma_{DB} = 1.10$ for oil tankers, for BC-B and BC-C bulk carriers and loaded cargo holds in alternate condition of BC-A bulk carriers,
- For sagging condition, except flooded condition: $\gamma_{DB} = 1.0$
- For hogging and sagging condition, for flooded condition: $\gamma_{DB} = 1.0$

2.2 Hull girder ultimate bending loads

2.2.1

The vertical hull girder bending moment, M in hogging and sagging conditions, to be considered in the ultimate strength check is to be taken as:

$$M = \gamma_S M_{sw-U} + \gamma_W f_\beta M_{wv}$$

where:

M_{sw-U} : Permissible still water bending moment, in kNm, in hogging and sagging conditions at the hull transverse section considered as defined in Table 1.

M_{wv} : Vertical wave bending moment, in kNm, in hogging and sagging conditions at the hull transverse section considered as defined in Ch 4, Sec 4, [3.1].

γ_S : Partial safety factor for the still water bending moment, as defined in Table 2.

γ_W : Partial safety factor for the vertical wave bending moment, as defined in Table 2.

f_β : Heading correction factor, as defined in Sec 1.

Table 2 : Partial safety factors

Design load scenarios	γ_S	γ_W
A	1.0	1.2
B	1.0	1.3

2.3 Hull girder ultimate bending capacity

2.3.1

The ultimate bending moment capacities of a hull girder transverse section, in hogging and sagging conditions, are defined as the maximum values of the curve of bending moment capacity versus the curvature χ of the transverse section considered (see Figure 1). The curvature χ is positive for hogging condition and negative for sagging condition.

Figure 1 : Bending moment capacity versus curvature χ

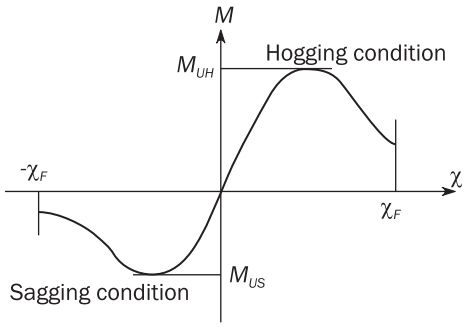

The hull girder ultimate bending capacity, M_U, is to be calculated according to Ch 5, App 2.

2.3.2

The effective area for the hull girder ultimate strength capacity assessment is specified in Ch 5, App 2.

SECTION 3
HULL GIRDER RESIDUAL STRENGTH

1 APPLICATION

1.1 General

1.1.1

The requirements of this section apply to ships equal to or greater than 150 m in length *L*.

1.1.2

The hull girder ultimate bending capacity in the damaged condition is to be checked for the seagoing condition to ensure that it satisfies the residual strength checking criteria given in [2].

1.1.3

The hull girder residual strength is to be assessed through the cargo hold region and the machinery space.

2 CHECKING CRITERIA

2.1 General

2.1.1

The vertical hull girder ultimate bending capacity in the damaged condition is to be checked for the damage conditions specified in [2.2] in hogging and sagging conditions. For the damage conditions specified in [2.2], for the design load scenario A, as defined in Table 1:

Table 1 : Design load scenarios

	Design load scenario	Permissible still water bending moment in damage, $M_{sw\text{-}D}$
Collision	A: S+D	$M_{sw\text{-}h}$ or $M_{sw\text{-}s}$
Grounding	A: S+D	$M_{sw\text{-}h}$ or $M_{sw\text{-}s}$

2.1.2

The vertical hull girder ultimate bending capacity in the damaged condition at any hull transverse section is to satisfy the following criteria:

$$M_D \leq \frac{M_{UD}}{\gamma_{RD} \cdot C_{NA}}$$

where:

M_D : Vertical bending moment in the damaged condition, in kNm, to be obtained as specified in [2.3].

M_{UD} : Vertical hull girder ultimate bending capacity in the damaged condition, in kNm, to be obtained as specified in [2.4].

γ_{RD} : Partial safety factor for the vertical hull girder ultimate bending capacity in the damaged condition, to be taken equal to:
$\gamma_{RD} = 1.0$

C_{NA} : Neutral axis coefficient taken as:

- C_{NA} = 1.0 for grounding,
- C_{NA} = 1.1 for collision.

2.2 Damage conditions

2.2.1 General

The damage conditions specified for collision in [2.2.2] and for grounding in [2.2.3] are to be considered. The damage extents specified in [2.2.2] and [2.2.3] are to be measured from the moulded lines of the ship.

Stiffener element is to be considered intact unless the connection of stiffener with attached plate is included in the damaged extent.

Plates and stiffeners of inner bottom and inner hull longitudinal bulkhead are to be considered intact unless the damage extent exceeds the moulded distance from inner bottom and inner hull longitudinal bulkhead plate respectively, to the hull envelope plate.

2.2.2 Collision

For the collision assessment of the considered transverse damage cross section, the damage is to be considered on one side and inclusive of the freeboard deck.

The damage for collision extends from the point of intersection of the moulded lines of deck and side:

- vertically downward for a distance *h* and upward without limit,
- transversally inboard for a distance *d* and outward without limit,

where *h* and *d* are given in Table 2 according to the side shell arrangement in the considered damage transverse section.

On ships with a rounded gunwale, the point of intersection is to be taken from the continuation of the moulded lines of deck and side.

Table 2 : Damage extent for collision

Damage penetration, in m	Side shell arrangement	
	Single side	Double side
Height, *h*	0.75 *D*	0.60 *D*
Depth, *d*	*B* /16	*B* /16

Figure 1 : Damage extent for collision

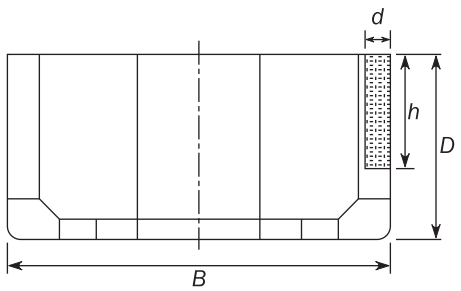

The capacity of the damaged transverse cross section is calculated with the damage extent on one side, the ship kept in upright position.

2.2.3 Grounding

For the grounding assessment of the considered transverse damage cross section, the damage is to be considered on the bottom in the most unfavourable transversal position as regard to the structure considered by the damage.

The damage extent for grounding is given in Table 3.

Table 3 : Damage extent for grounding

Damage penetration, in m	Bulk carriers	Oil tankers
Height, *h*	Min (*B* /20, 2)	Min (*B* /15, 2)
Breadth, *b*	0.60 *B*	0.60 *B*

Figure 2 : Damage extent for grounding

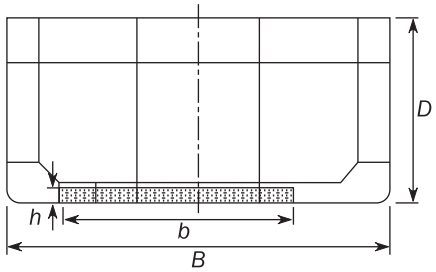

2.3 Hull girder ultimate bending loads in the damaged condition

2.3.1

The vertical bending moment, M_D in hogging and sagging conditions, to be considered in the ultimate strength check of the hull girder in the damaged condition, is to be obtained from the following formula:

$$M_D = \gamma_{SD} M_{sw-D} + \gamma_{WD} M_{wv}$$

where:

M_{sw-D} : Permissible still water bending moment, in kNm, in hogging and sagging conditions at the hull transverse section considered, as defined in Table 1.

M_{wv} : Vertical wave bending moment, in kNm, in hogging and sagging conditions at the hull transverse section considered, as defined in Ch 4, Sec 4, [3.1].

γ_{SD} : Partial safety factor for the still water bending moment in the damaged condition, to be taken equal to:
$\gamma_{SD} = 1.1$

γ_{WD} : Partial safety factor for the vertical wave bending moment in the damaged condition, to be taken equal to:
$\gamma_{WD} = 0.67$

2.4 Hull girder ultimate bending capacity in the damaged condition

2.4.1

The hull girder ultimate bending capacity in the damaged condition is to be calculated according to Ch 5, App 2, with the damaged parts assumed not to contribute to the hull girder strength. When assessing the ultimate bending capacity, M_{UD} of the damaged hull sections, damaged area as defined in [2.2] carries no loads and is to be removed in the capacity model.

2.4.2

The effective area of the intact parts for the hull girder ultimate strength capacity assessment is specified in Ch 5, App 2.

APPENDIX 1
DIRECT CALCULATION OF SHEAR FLOW

SYMBOLS

For symbols not defined in this section, refer to Ch 1, Sec 4.

1 CALCULATION FORMULA

1.1 General

1.1.1

This appendix describes the procedures of direct calculation of shear flow which is working along a ship cross section due to hull girder vertical shear force. Shear flow q_v, at each location in the cross section, is calculated where considering the cross section is subjected to a unit vertical shear force, 1 N, in the direction of z coordinate.

The unit shear flow per mm, q_v in N/mm, can be considered equal to:

$$q_v = q_D + q_I$$

where:

q_D : Determinate shear flow, as defined in [1.2].

q_I : Indeterminate shear flow which circulates around the closed cells, as defined in [1.3].

In the calculation of the unit shear flow, q_v, the longitudinal stiffeners are to be taken into account.

1.2 Determinate shear flow

1.2.1

The determinate shear flow, q_D in N/mm, at each location in the cross section can be obtained from the following line integration:

$$q_D(s) = -\frac{1}{10^6 I_{y-n50}} \int_0^s (z - z_n)\, t_{n50} ds$$

where:

s : Coordinate value of running coordinate along the cross section, in m.

$I_{y\text{-}n50}$: Moment inertia of the cross section, in m^4.

t_{n50} : Net thickness of plating, in mm, or equivalent net thickness of corrugated plate as defined in Ch 5, Sec 1, [3.4.6].

1.2.2

Assuming the cross section is composed of line segments as shown in Figure 1, the determinate shear flow can be calculated by the following equation.

$$q_{Dk} = q_D(\ell) = -\frac{t_{n50}\ell}{2\times 10^6\, I_{y-n50}}(z_k + z_i - 2z_n) + q_{Di}$$

where:

q_{Dk}, q_{Di} : Determinate shear flow at node *k* and node *i* respectively, in N/mm.

ℓ : Length of line segments, in m.

z_k, z_i : *Z* coordinate of the end point of line segment, in m, as defined in Figure 1.

1.2.3

Where the cross section includes closed cells, the closed cell are to be cut with virtual slits, as shown in Figure 2 in order to obtain the determinate shear flow.

However, the virtual slits must not be located at the walls by which the other closed cell is also bounded.

1.2.4

Calculations of the determinate shear flow at bifurcation points can be calculated such as water flow calculations as shown in Figure 2.

Figure 1 : Definition of line segment

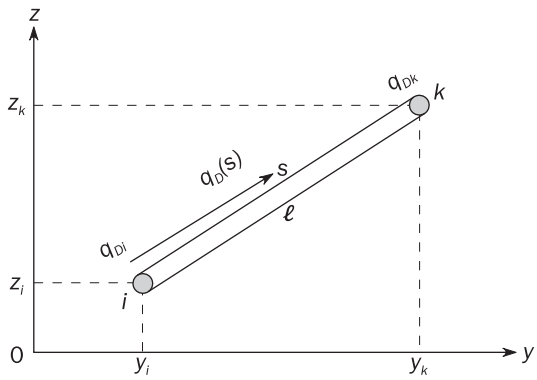

Figure 2 : Calculation of determinate shear flow at bifurcation

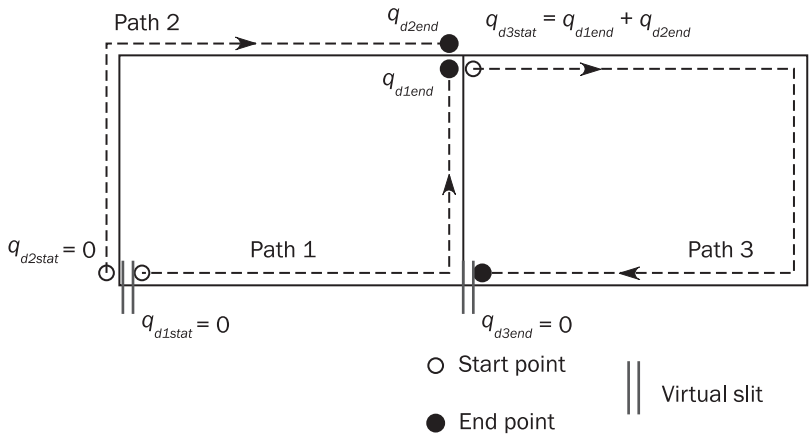

1.3 Indeterminate shear flow

1.3.1

The indeterminate shear flow is working around the closed cells and can be considered as a constant value within the same closed cell. The following system of equation for determination of indeterminate shear flows can be developed. In the equations, contour integrations of several parameters around all closed cells are performed.

$$q_{Ik} \oint_k \frac{1}{t_{n50}}\, ds - \sum_i q_{Ii} \oint_{k,i} \frac{1}{t_{n50}}\, ds = -\oint_k \frac{q_D}{t_{n50}}\, ds$$

where:

q_{Ik}, q_{Ii} : Indeterminate shear flow around the closed cell k and i respectively, in N/mm.

1.3.2

With assuming assembly of line segments shown in Figure 1, the equations in [1.3.1] can be expressed as follows:

$$q_{Ik} \sum_{cell\,k} \frac{\ell}{t_{n50}} - \sum_i q_{Ii} \left(\frac{\ell}{t_{n50}}\right)\Bigg|_{common\ wall\ with\ cell\ k} = -\sum_{cell\,k} \phi$$

$$\phi = \int_0^{\ell} \frac{q_D\,(s)}{t_{n50}}\, ds = -\frac{\ell^2}{6 \times 10^3\, I_{y-n50}} (z_k + 2z_i - 3z_n) + \frac{\ell}{t_{n50}}\, q_{Di}$$

where:

q_{Di} : Determinate shear flow, in N/mm, calculated according to [1.2.2].

The difference in the directions of running coordinates specified in [1.2] and this sub-article is to be considered.

Figure 3 : Closed cells and common wall

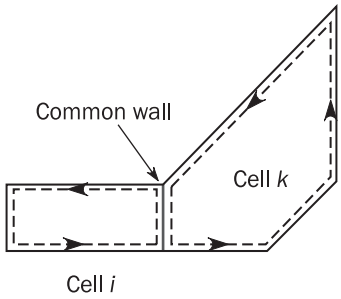

1.4 Computation of several properties of the cross section

1.4.1

Properties of the cross section can be obtained by the following formulae where the cross section is assumed as the assembly of line segments:

$$\ell = \sqrt{(y_k - y_i)^2 + (z_k - z_i)^2}$$

$$a_{n50} = 10^{-3}\, \ell t_{n50} \qquad A_{n50} = \sum a_{n50}$$

$$s_{y-n50} = \frac{a_{n50}}{2} (z_k + z_i) \qquad S_{y-n50} = \sum s_{y-n50}$$

$$i_{y0-n50} = \frac{a_{n50}}{3} (z_k^2 + z_k\, z_i + z_i^2) \qquad I_{y0-n50} = \sum i_{y0-n50}$$

where:

a_{n50}, A_{n50}: Area of the line segment and the cross section respectively, in m^2.

$s_{y\text{-}n50}$, $S_{y\text{-}n50}$: First moment of the line segment and the cross section about the baseline, in m^3.

$i_{y0\text{-}n50}$, $I_{y0\text{-}n50}$: Moment inertia of the line segment and the cross section about the baseline, in m^4.

1.4.2

The height of horizontal neutral axis, z_n in m, can be obtained as follows:

$$z_n = \frac{S_{y-n50}}{A_{n50}}$$

1.4.3

Inertia moment about the horizontal neutral axis, in m^4, can be calculated as follows:

$$I_{y-n50} = I_{y0-n50} - z_n^2 A_{n50}$$

2 EXAMPLE OF CALCULATIONS FOR A SINGLE SIDE HULL CROSS SECTION

2.1 Cross section data

2.1.1

The cross section is shown in Figure 4. The coordinates of the node points marked by filled black circles in Figure 4 are given in Table 1, where the plate thickness and the line segments (marked by circles in Figure 4) of the cross section are given in Table 2.

The sample calculations are performed taking advantage of symmetry of the cross section.

Table 1 : Node coordinates of cross section

Node number	*Y* coordinate (m)	*Z* coordinate (m)
0	0.00	0.00
1	5.80	0.00
2	11.70	0.00
3	14.42	0.00
4	16.13	1.72
5	16.13	6.11
6	11.70	1.68
7	5.80	1.68
8	0.00	1.68
9	16.13	14.15
10	16.13	19.60
11	7.50	20.25
12	7.50	19.63

Table 2 : Calculation of cross sectional properties

Line no.	Node *i*	Node *k*	Thickness (mm)	Length (m)	a_{n50} (m^2)	$s_{y\text{-}n50}$ (m^3)	$i_{y0\text{-}n50}$ (m^4)
1	0	1	17.0	5.80	0.099	0.000	0.00
2	1	2	17.0	5.90	0.100	0.000	0.00
3	2	3	17.0	2.72	0.046	0.000	0.00
4	3	4	17.0	2.43	0.041	0.035	0.04
5	4	5	18.0	4.39	0.079	0.309	1.34
6	5	6	19.0	6.26	0.119	0.464	2.00
7	6	7	21.0	5.90	0.124	0.208	0.35
8	7	8	21.0	5.80	0.122	0.205	0.34
9	5	9	18.0	8.04	0.145	1.466	15.63
10	9	10	21.0	5.45	0.114	1.931	32.87
11	10	11	24.0	8.65	0.208	4.139	82.47
12	11	12	24.0	0.62	0.015	0.297	5.92
13	12	9	15.0	10.22	0.153	2.590	44.13
14	2	6	15.0	1.68	0.025	0.021	0.02
15	1	7	15.0	1.68	0.025	0.021	0.02
				Total	1.416	11.686	185.138

2.1.2

The *Z* coordinate of horizontal neutral axis and the inertia moment about the neutral axis are calculated as follows:

$$z_n = \frac{\sum s_{y-n50}}{\sum a_{n50}} = \frac{11.686}{1.416} = 8.255$$

$$I_{y-n50} = 2(\sum i_{y0-n50} - z_n^2 \sum a_{n50}) = 2(185.138 - 8.255^2 \times 1.416) = 177.34$$

Figure 4 : Numbering of nodes and lines

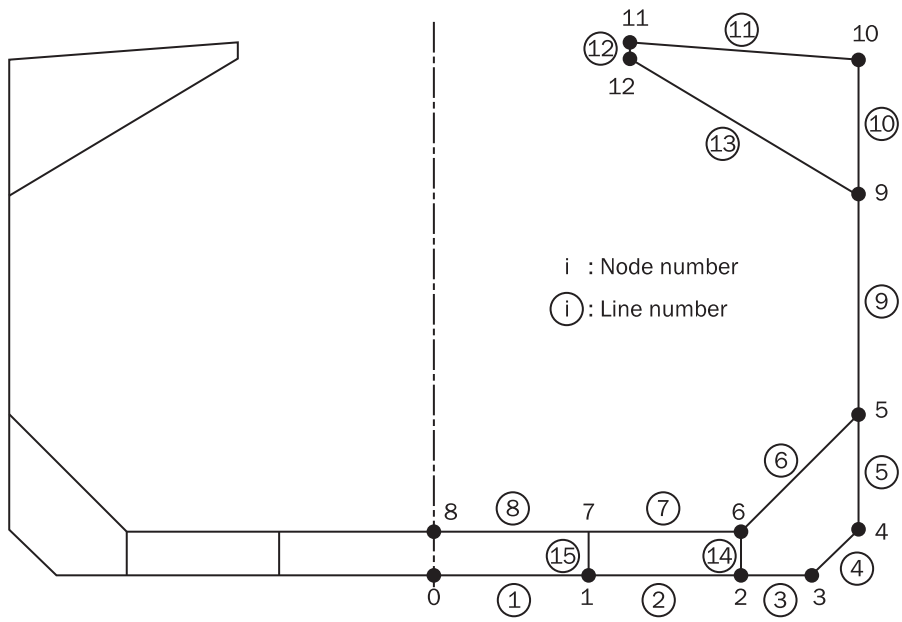

2.2 Calculations of the determinate shear flow

2.2.1

The virtual slits are added to cut the walls of the closed cells as shown in Figure 5. And then, the line integrations specified in [1.2.2] are performed to obtain determinate shear flow, q_D. The calculation results are shown in Table 3. The locations of the virtual slits and the paths of line integrations shown in Figure 5 are one such example. These definitions can be arbitrarily determined so as to calculate them easily.

Figure 5 : Ranges and directions of paths for line integrations

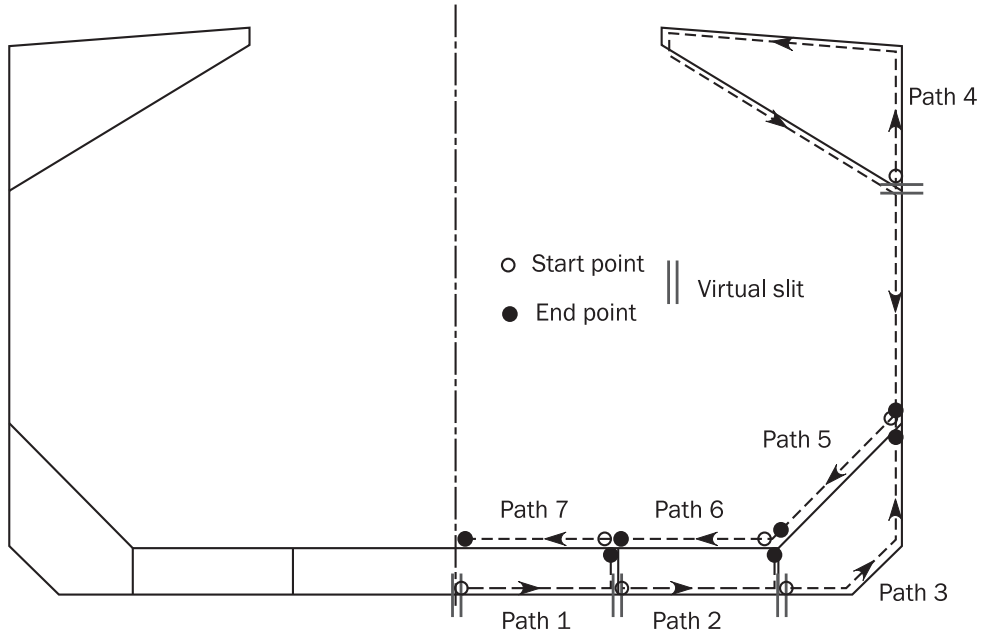

Table 3 : Calculation of determinate shear flow

Path no.	Line no.	Node *i*	Node *k*	$q_{Di}\times10^{-6}$ (N/mm)	$q_{Dk}\times10^{-6}$ (N/mm)	Note
1	1	0	1	0.0	4.6	Start from the virtual slit
	15	1	7	4.6	5.6	-
2	2	1	2	0.0	4.7	Start from the virtual slit
	14	2	6	4.7	5.7	-
3	3	2	3	0.0	2.2	Start from the virtual slit
	4	3	4	2.2	3.9	-
	5	4	5	3.9	5.8	-
4	10	9	10	0.0	-5.6	Start from the virtual slit
	11	10	11	-5.6	-19.2	-
	12	11	12	-19.2	-20.2	-
	13	12	9	-20.2	-27.7	-
	9	9	5	-27.7	-29.2	-
5	6	5	6	-23.4	-20.5	Start with the sum of q_{DK} at the ends of path 3 & 4
6	7	6	7	-14.8	-10.2	Start with the sum of q_{DK} at the ends of path 2 & 5
7	8	7	8	-4.5	0.0	Start with the sum of q_{DK} at the ends of path 1 & 6

2.3 Calculations of the indeterminate shear flow

2.3.1

To obtain the system of equations for indeterminate shear flows, the contour integrations around 3 closed cells as defined in Figure 6 are performed. The closed cell at the centre of double bottom is considered as an open shape since the symmetrical condition of the cross section is considered. The calculation results of contour integrations around the closed cells are shown in Table 4 to Table 6.

Table 4 : Contour integration of ℓ/t_{n50} and ϕ around cell 1

Line no.	Node *i*	Node *k*	$q_{Di}\times10^{-6}$ (N/mm)	ℓ/t_{n50}	$\phi\times10^{-3}$ (N/mm)	Note
2	1	2	0.0	347.1	0.81	-
14	2	6	4.7	112.0	0.58	Common wall with cell 2
7	6	7	-14.8	281.0	-3.50	-
15	7	1	-5.6	112.0	-0.58	-
			Total	852.0	-2.68	-

Table 5 : Contour integration of ℓ/t_{n50} and ϕ around cell 2

Line no.	Node *i*	Node *k*	$q_{Di}\times10^{-6}$ (N/mm)	ℓ/t_{n50}	$\phi\times10^{-3}$ (N/mm)	Note
3	2	3	0.0	160.0	0.17	-
4	3	4	2.2	142.7	0.43	-
5	4	5	3.9	243.9	1.22	-
6	5	6	-23.4	329.7	-7.32	-
14	6	2	-5.7	112.0	-0.58	Common wall with cell 1
			Total	988.3	-6.07	-

Table 6 : Contour integration of ℓ/t_{n50} and ϕ around cell 3

Line no.	Node *i*	Node *k*	$q_{Di}\times10^{-6}$ (N/mm)	ℓ/t_{n50}	$\phi\times10^{-3}$ (N/mm)	Note
10	9	10	0.0	259.5	-0.65	-
11	10	11	-5.6	360.6	-4.45	-
12	11	12	-19.2	25.8	-0.51	-
13	12	9	-20.2	681.5	-16.59	-
			Total	1327.5	-22.19	-

2.3.2

The following system of equations can be developed by using the results of the contour integration around each closed cell:

- Cell 1: $852.0\ q_{I1} - 112.0\ q_{I2} = 2.68 \times 10^{-3}$
- Cell 2: $-112.0\ q_{I1} + 988.3\ q_{I2} = 6.07 \times 10^{-3}$
- Cell 3: $1327.5\ q_{I3} = 2.219\times10^{-2}$

The solution of this system gives indeterminate shear flows of the closed cell 1 to 3:

$q_{I1} = 4.01 \times 10^{-6}$, $q_{I2} = 6.60 \times 10^{-6}$, $q_{I3} = 1.67 \times 10^{-5}$

Figure 6 : Numbering of closed cells

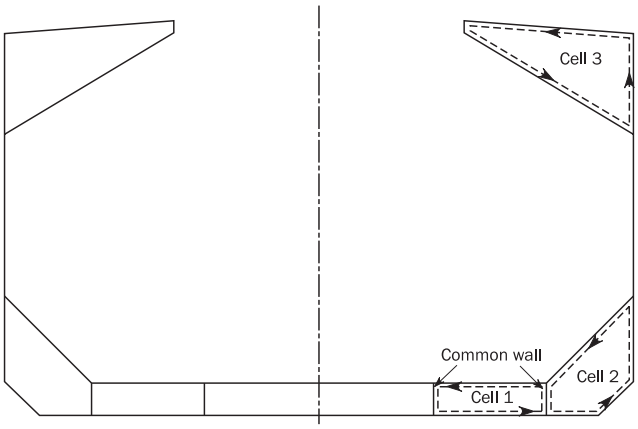

2.4 Summation

2.4.1

The shear flow q_v, at all locations of the cross section can be obtained by the summation of determinate shear flow, q_D and indeterminate shear flow, q_I as shown in Figure 7.

Figure 7 : Calculation results of shear flow q_v, in 10^{-6} N/mm for vertical shear force with 1 N

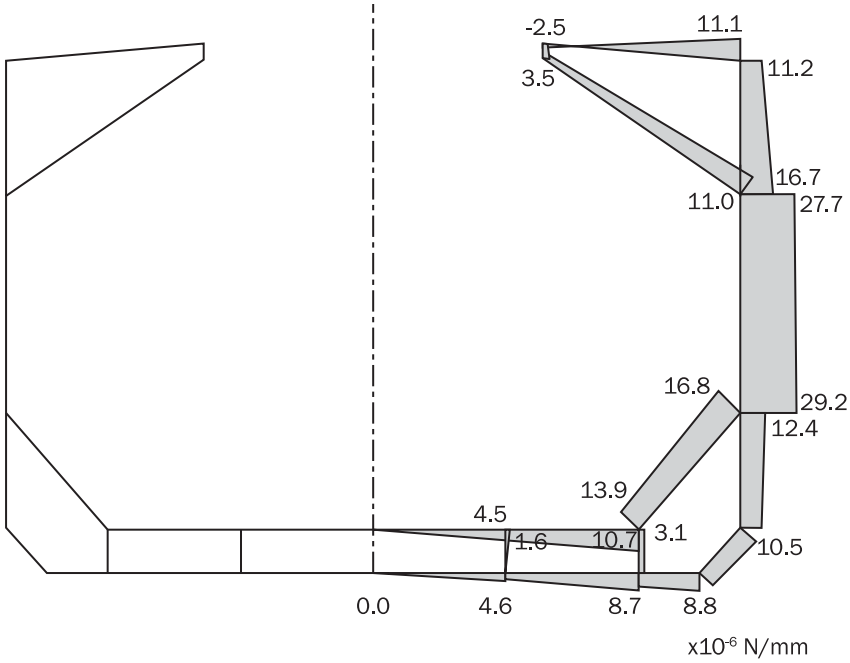

APPENDIX 2
HULL GIRDER ULTIMATE CAPACITY

SYMBOLS

For symbols not defined in this article, refer to Ch 1, Sec 4.

$I_{y\text{-}n50}$: Moment of inertia, in m^4, of the hull transverse section around its horizontal neutral axis, to be calculated according to Ch 5, Sec 1.

$Z_{B\text{-}n50}$, $Z_{D\text{-}n50}$: Section moduli, in m^3, at bottom and deck, respectively, defined in Ch 5, Sec 1.

R_{eHs} : Minimum yield stress, in N/mm^2, of the material of the considered stiffener.

R_{eHp} : Minimum yield stress, in N/mm^2, of the material of the considered plate.

$A_{s\text{-}n50}$: Net sectional area, in cm^2, of stiffener, without attached plating.

$A_{p\text{-}n50}$: Net sectional area, in cm^2, of attached plating.

z_i : z coordinate, in m, of centre of gravity of the *i*-th element.

1 GENERAL

1.1 Application

1.1.1

This appendix provides the criteria for obtaining the following ultimate longitudinal bending moment capacities:

- M_U to be used in the hull girder ultimate capacity check according to Ch 5, Sec 2,
- M_{UD} to be used in the hull girder residual strength capacity check according to Ch 5, Sec 3

1.1.2

The hull girder ultimate longitudinal bending moment capacity, M_U or M_{UD}, is defined as the maximum bending capacity of the hull girder beyond which the hull structure collapses. Hull girder failure is controlled by buckling, ultimate strength and yielding of longitudinal structural elements.

1.2 Methods

1.2.1 Incremental-iterative method

The hull girder ultimate bending capacity is to be assessed by the incremental-iterative method defined in [2].

1.2.2 Alternative methods

Principles for alternative methods for the calculation of the hull girder ultimate bending capacity; e.g. non-linear finite element analysis, are given in [3].

Application of alternative methods is to be agreed by the Society prior to commencement. Documentation of the analysis methodology and detailed comparison of its results are to be submitted for review and acceptance. The use of such methods may require the partial safety factors to be recalibrated.

1.3 Assumptions

1.3.1

The method for calculating the ultimate hull girder capacity is to identify the critical failure modes of all main longitudinal structural elements.

1.3.2

Structures compressed beyond their buckling limit have reduced load carrying capacity. All relevant failure modes for individual structural elements, such as plate buckling, torsional stiffener buckling, stiffener web buckling, lateral or global stiffener buckling; and their interactions, are to be considered in order to identify the weakest inter-frame failure mode.

1.3.3

Only vertical bending is considered. The effects of shear force, torsional loading, horizontal bending moment and lateral pressure are neglected.

1.3.4

For the calculation of the ultimate longitudinal bending moment capacity, M_{UD}, used in the hull girder residual strength check according to Ch 5, Sec 3, the structural members in way of the damage part are to be excluded from the members participating to the considered cross section strength.

2 INCREMENTAL-ITERATIVE METHOD

2.1 Assumptions

2.1.1

In applying the procedure described in [2.2], the following assumptions are generally to be made:

- The ultimate strength is calculated at hull transverse sections between two adjacent transverse webs.
- The hull girder transverse section remains plane during each curvature increment.
- The hull material has an elasto-plastic behaviour.
- The hull girder transverse section is divided into a set of elements, which are considered to act independently.

These elements are:

- Transversely framed plating panels and/or stiffeners with attached plating, whose structural behaviour is described in [2.3.1].
- Hard corners, constituted by plating crossing, whose structural behaviour is described in [2.3.2].
- According to the iterative procedure, the bending moment M_i acting on the transverse section at each curvature value χ_i is obtained by summing the contribution given by the stress σ acting on each element. The stress σ corresponding to the element strain, ε is to be obtained for each curvature increment from the non-linear load-end shortening curves σ-ε of the element.

These curves are to be calculated, for the failure mechanisms of the element, from the formulae specified in [2.2]. The stress, σ is selected as the lowest among the values obtained from each of the considered load-end shortening curves σ-ε.

The procedure is to be repeated until the value of the imposed curvature reaches the value χ_F in m^{-1}, in hogging and sagging condition, obtained from the following formula:

$$\chi_F = \pm 0.003 \frac{M_Y}{EI_{y-n50}}$$

where:

M_Y : Lesser of the values M_{Y1} and M_{Y2}, in kNm.

$M_{Y1} = 10^3 R_{eH} Z_{B\text{-}n50.}$

$M_{Y2} = 10^3 R_{eH} Z_{D\text{-}n50}$.

If the value χ_F is not sufficient to evaluate the peaks of the curve M-χ, the procedure is to be repeated until the value of the imposed curvature permits the calculation of the maximum bending moments of the curve.

2.2 Procedure

2.2.1 General

The curve M-χ is to be obtained by means of an incremental-iterative approach, summarised in the flow chart in Figure 1.

In this procedure, the ultimate hull girder bending moment capacity, M_U is defined as the peak value of the curve with vertical bending moment M versus the curvature χ of the ship cross section as shown in Figure 1. The curve is to be obtained through an incremental-iterative approach.

Each step of the incremental procedure is represented by the calculation of the bending moment M_i which acts on the hull transverse section as the effect of an imposed curvature χ_i.

For each step, the value χ_i is to be obtained by summing an increment of curvature, $\Delta\chi$ to the value relevant to the previous step $\chi_{i-1.}$ This increment of curvature corresponds to an increment of the rotation angle of the hull girder transverse section around its horizontal neutral axis.

This rotation increment induces axial strains, ε in each hull structural element, whose value depends on the position of the element. In hogging condition, the structural elements above the neutral axis are lengthened, while the elements below the neutral axis are shortened, and vice-versa in sagging condition.

The stress σ induced in each structural element by the strain ε is to be obtained from the load-end shortening curve σ-ε of the element, which takes into account the behaviour of the element in the non-linear elasto-plastic domain.

The distribution of the stresses induced in all the elements composing the hull transverse section determines, for each step, a variation of the neutral axis position, since the relationship σ-ε is non-linear. The new position of the neutral axis relevant to the step considered is to be obtained by means of an iterative process, imposing the equilibrium among the stresses acting in all the hull elements.

Once the position of the neutral axis is known and the relevant stress distribution in the section structural elements is obtained, the bending moment of the section M_i around the new position of the neutral axis, which corresponds to the curvature χ_i imposed in the step considered, is to be obtained by summing the contribution given by each element stress.

The main steps of the incremental-iterative approach described above are summarised as follows (see also Figure 1):

a) Step 1: Divide the transverse section of hull into stiffened plate elements.

b) Step 2: Define stress-strain relationships for all elements as shown in Table 1.

c) Step 3: Initialise curvature χ_1 and neutral axis for the first incremental step with the value of incremental curvature (i.e. curvature that induces a stress equal to 1% of yield strength in strength deck) as:

$$\chi_1 = \Delta\chi = 0.01\frac{R_{eH}}{E}\frac{1}{z_D - z_n}$$

where:

z_D : Z coordinate, in m, of strength deck at side, with respect to reference coordinate defined in Ch 1, Sec 4, [3.6]

d) Step 4: Calculate for each element the corresponding strain, $\varepsilon_i = \chi\ (z_i - z_n)$ and the corresponding stress σ_i.

e) Step 5: Determine the neutral axis z_{NA_cur} at each incremental step by establishing force equilibrium over the whole transverse section as:

$\Sigma A_{i\text{-}n50}\,\sigma_i = \Sigma A_{j\text{-}n50}\,\sigma_j$ (*i*-th element is under compression, *j*-th element under tension).

f) Step 6: Calculate the corresponding moment by summing the contributions of all elements as:

$$M_U = \sum \sigma_{Ui}\ A_{i-n50}\ \left|(z_i - z_{NA_cur})\right|$$

g) Step 7: Compare the moment in the current incremental step with the moment in the previous incremental step. If the slope in M-χ relationship is less than a negative fixed value, terminate the process and define the peak value of M_U. Otherwise, increase the curvature by the amount of $\Delta\chi$ and go to Step 4.

2.2.2 Modelling of the hull girder cross section

Hull girder transverse sections are to be considered as being constituted by the members contributing to the hull girder ultimate strength.

Sniped stiffeners are also to be modelled, taking account that they do not contribute to the hull girder strength.

The structural members are categorised into a stiffener element, a stiffened plate element or a hard corner element.

The plate panel including web plate of girder or side stringer is idealised into either a stiffened plate element, an attached plate of a stiffener element or a hard corner element.

The plate panel is categorised into the following two kinds:

- Longitudinally stiffened panel of which the longer side is in the longitudinal direction, and
- Transversely stiffened panel of which the longer side is in the perpendicular direction to the longitudinal direction.

a) Hard corner element:

Hard corner elements are sturdier elements composing the hull girder transverse section, which collapse mainly according to an elasto-plastic mode of failure (material yielding); they are generally constituted by two plates not lying in the same plane.

The extent of a hard corner element from the point of intersection of the plates is taken equal to 20 t_{n50} on transversely stiffened panel and to 0.5 s on a longitudinally stiffened panel, see Figure 2.

where:

t_{n50} : Net offered thickness of the plate, in mm.

s : Spacing of the adjacent longitudinal stiffener, in m.

Bilge, sheer strake-deck stringer elements, girder-deck connections and face plate-web connections on large girders are typical hard corners. Enlarged stiffeners, with or without web stiffening, used for Permanent Means of Access (PMA) are not to be considered as a large girder so the attached plate/web connection is only considered as a hard corner, see Figure 3.

b) Stiffener element:

The stiffener constitutes a stiffener element together with the attached plate.

The attached plate width is in principle:

- Equal to the mean spacing of the stiffener when the panels on both sides of the stiffener are longitudinally stiffened, or
- Equal to the width of the longitudinally stiffened panel when the panel on one side of the stiffener is longitudinally stiffened and the other panel is of the transversely stiffened, see Figure 2.

Figure 1 : Flow chart of the procedure for the evaluation of the curve *M*-χ

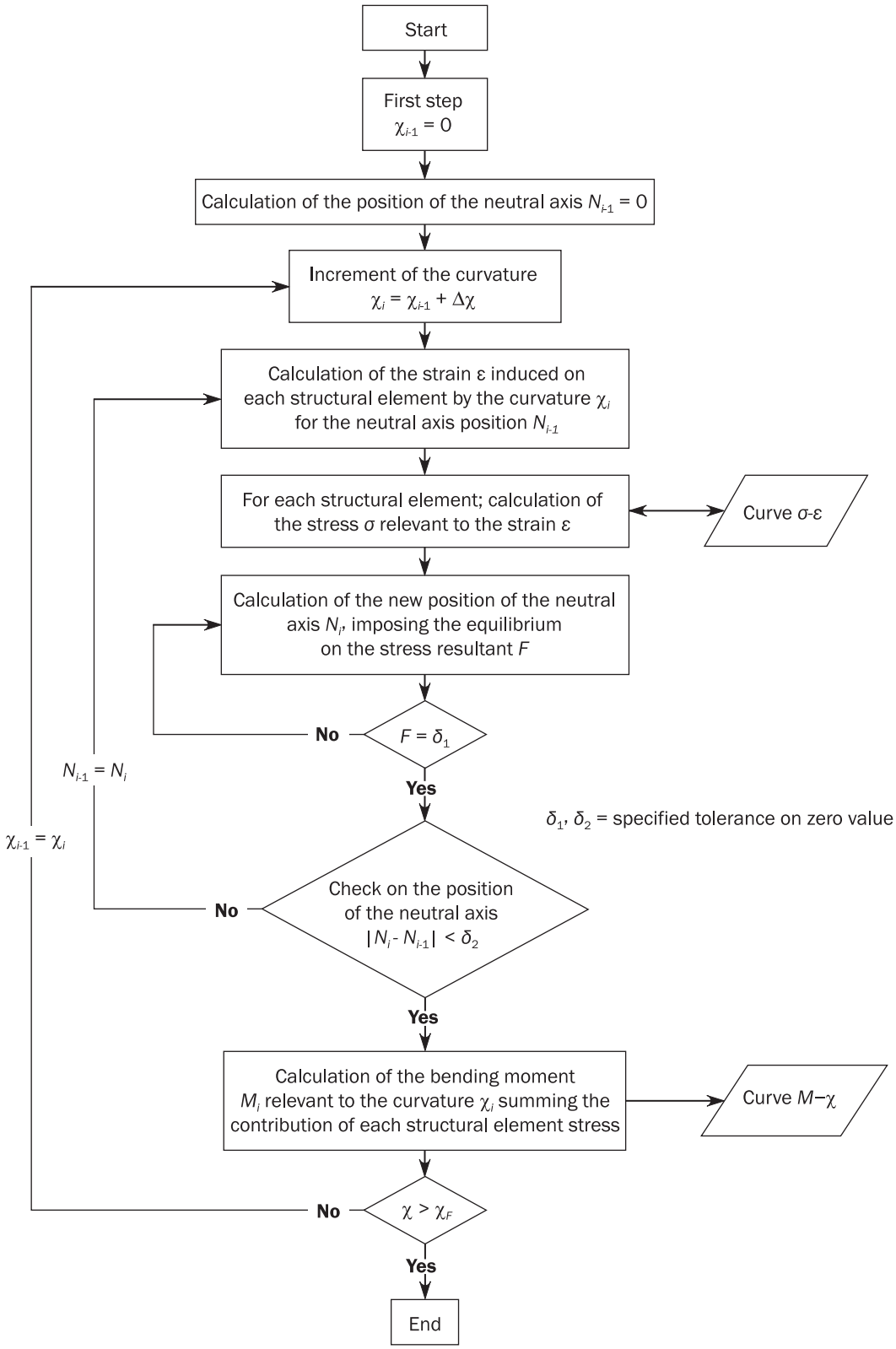

c) Stiffened plate element:

The plate between stiffener elements, between a stiffener element and a hard corner element or between hard corner elements is to be treated as a stiffened plate element, see Figure 2.

Figure 2 : Extension of the breadth of the attached plating and hard corner element

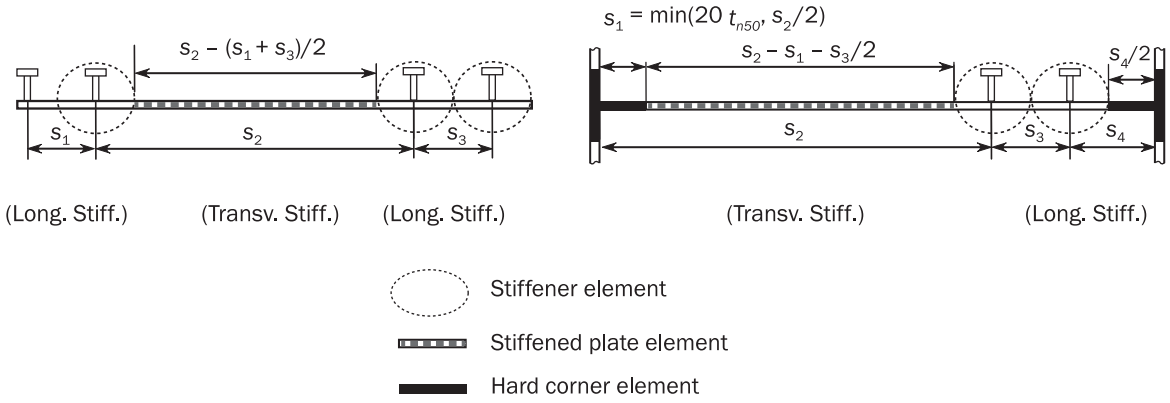

The typical examples of modelling of hull girder section are illustrated in Figure 3 and Figure 4. Notwithstanding the foregoing principle, these figures are to be applied to the modelling in the vicinity of upper deck, sheer strake and hatch side girder.

Figure 3 : Examples of the configuration of stiffened plate elements, stiffener elements and hard corner elements on a hull section

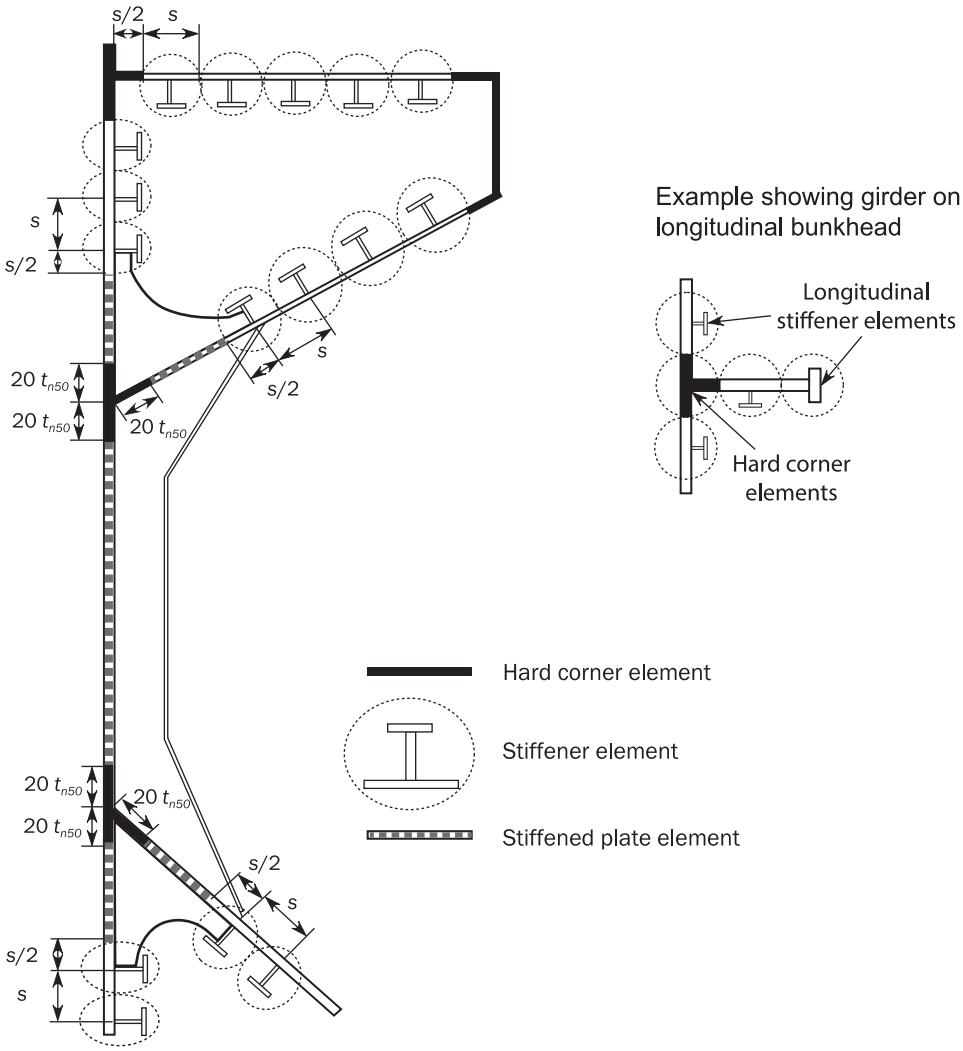

- In case of the knuckle point as shown in Figure 5, the plating area adjacent to knuckles in the plating with an angle greater than 30 deg is defined as a hard corner. The extent of one side of the corner is taken equal to 20 t_{n50} on transversely framed panels and to 0.5 s on longitudinally framed panels from the knuckle point.

- Where the plate members are stiffened by non-continuous longitudinal stiffeners, the non-continuous stiffeners are considered only as dividing a plate into various elementary plate panels.

- Where the opening is provided in the stiffened plate element, the openings are to be considered in accordance with Ch 5, Sec 1, [1.2.9].

- Where attached plating is made of steels having different thicknesses and/or yield stresses, an average thickness and/or average yield stress obtained from the following formula are to be used for the calculation.

$$t_{n50} = \frac{t_{1-n50}s_1 + t_{2-n50}s_2}{s} \qquad R_{eHp} = \frac{R_{eHp1}\ t_{1-n50}\ s_1 + R_{eHp2}\ t_{2-n50}\ s_2}{t_{n50}s}$$

where R_{eHp1}, R_{eHp2}, $t_{1\text{-}n50}$, $t_{2\text{-}n50}$, s_1, s_2 and s are shown in Figure 6.

Figure 4 : Extension of the breadth of the attached plating and hard corner element

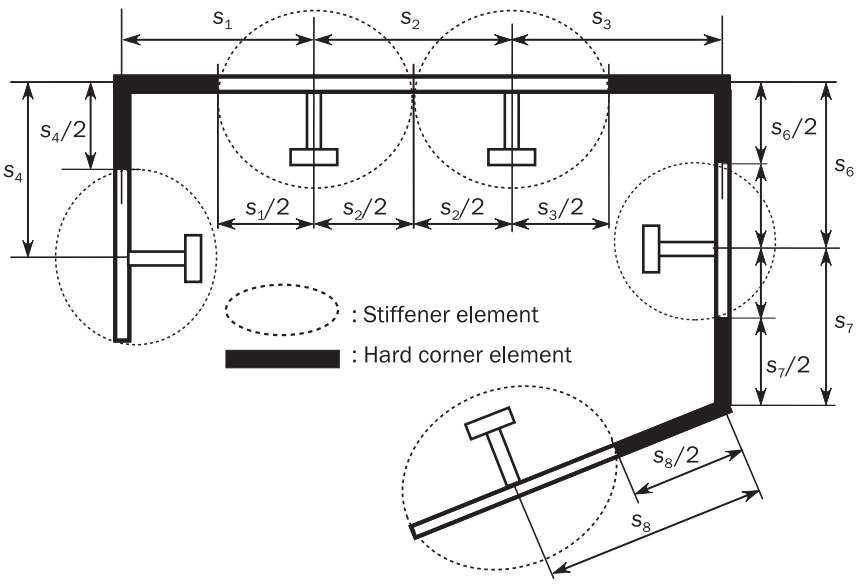

Figure 5 : Plating with knuckle point

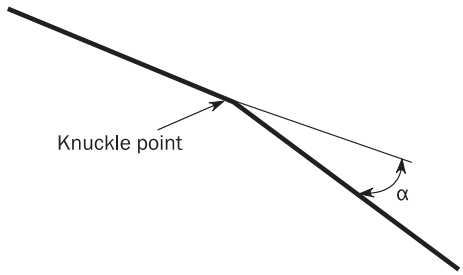

Figure 6 : Element with different thickness and yield strength

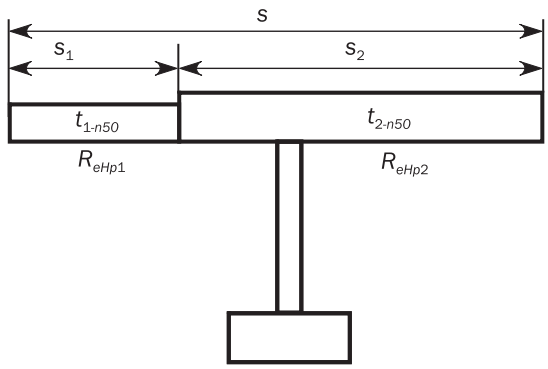

2.3 Load-end shortening curves

2.3.1 Stiffened plate element and stiffener element

Stiffened plate element and stiffener element composing the hull girder transverse sections may collapse following one of the modes of failure specified in Table 1.

- Where the plate members are stiffened by non-continuous longitudinal stiffeners, the stress of the element is to be obtained in accordance with [2.3.3] to [2.3.8], taking into account the non-continuous longitudinal stiffener. In calculating the total forces for checking the hull girder ultimate strength, the area of non-continuous longitudinal stiffener is to be assumed as zero.
- Where the opening is provided in the stiffened plate element, the considered area of the stiffened plate element is to be obtained by deducting the opening area from the plating in calculating the total forces for checking the hull girder ultimate strength. The consideration of the opening is in accordance with the requirement in Ch 5, Sec 1, [1.2.9] to Ch 5, Sec 1, [1.2.13].
- For stiffened plate element, the effective width of plate for the load shortening portion of the stress-strain curve is to be taken as full plate width, i.e. to the intersection of other plate or longitudinal stiffener – neither from the end of the hard corner element nor from the attached plating of stiffener element, if any. In calculating the total forces for checking the hull girder ultimate strength, the area of the stiffened plate element is to be taken between the hard corner element and the stiffener element or between the hard corner elements, as applicable.

Table 1 : Modes of failure of stiffened plate element and stiffener element

Element	Mode of failure	Curve σ-ε defined in
Lengthened stiffened plate element or stiffener element	Elasto-plastic collapse	[2.3.3]
Shortened stiffener element	Beam column buckling Torsional buckling Web local buckling of flanged profiles Web local buckling of flat bars	[2.3.4] [2.3.5] [2.3.6] [2.3.7]
Shortened stiffened plate element	Plate buckling	[2.3.8]

2.3.2 Hard corner element

The relevant load-end shortening curve σ-ε is to be obtained for lengthened and shortened hard corners according to [2.3.3].

2.3.3 Elasto-plastic collapse of structural elements

The equation describing the load-end shortening curve σ-ε for the elasto-plastic collapse of structural elements composing the hull girder transverse section is to be obtained from the following formula, valid for both positive (shortening) and negative (lengthening) strains, see Figure 7:

$\sigma = \Phi R_{eHA}$

where:

R_{eHA} : Equivalent minimum yield stress, in N/mm^2, of the considered element, obtained by the following formula:

$$R_{eHA} = \frac{R_{eHp} A_{p-50} + R_{eHs} A_{s-n50}}{A_{p-n50} + A_{s-n50}}$$

Φ : Edge function, equal to:

$\Phi = -1$ for $\varepsilon < -1$

$\Phi = \varepsilon$ for $-1 \le \varepsilon \le 1$

$\Phi = 1$ for $\varepsilon > 1$

ε : Relative strain, equal to:

$$\varepsilon = \frac{\varepsilon_E}{\varepsilon_Y}$$

ε_E : Element strain.

ε_Y : Strain at yield stress in the element, equal to:

$$\varepsilon_Y = \frac{R_{eHA}}{E}$$

Figure 7 : Load-end curve σ-ε for elasto plastic collapse

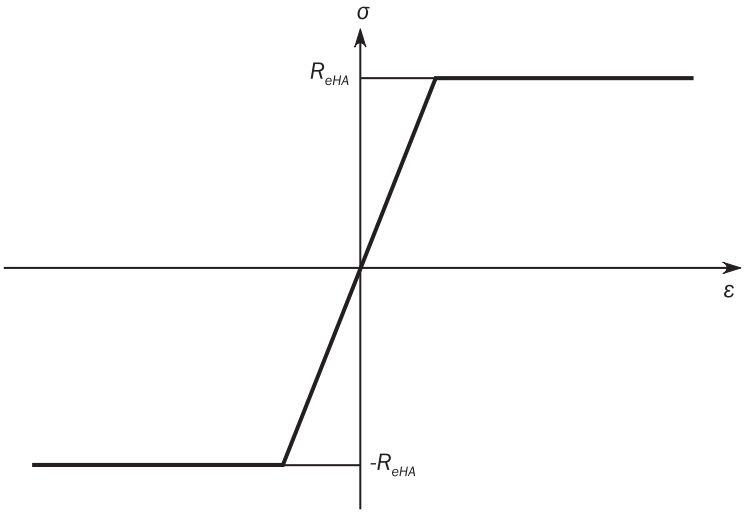

2.3.4 Beam column buckling

The equation describing the load-end shortening curve σ_{CR1}-ε for the beam column buckling of stiffeners composing the hull girder transverse section is to be obtained from the following formula, see Figure 8:

$$\sigma_{CR1} = \Phi\sigma_{C1}\frac{A_{s-n50} + A_{pE-n50}}{A_{s-n50} + A_{p-n50}}$$

where:

Φ : Edge function, as defined in [2.3.3].

σ_{C1} : Critical stress, in N/mm^2, equal to:

$$\sigma_{C1} = \frac{\sigma_{E1}}{\varepsilon} \qquad \text{for } \sigma_{E1} \le \frac{R_{eHB}}{2}\varepsilon$$

$$\sigma_{C1} = R_{eHB}\left(1 - \frac{R_{eHB}\,\varepsilon}{4\sigma_{E1}}\right) \qquad \text{for } \sigma_{E1} > \frac{R_{eHB}}{2}\varepsilon$$

R_{eHB} : Equivalent minimum yield stress, in N/mm^2, of the considered element, obtained by the following formula:

$$R_{eHB} = \frac{R_{eHp}\,A_{pEI-n50}\,\ell_{pE} + R_{eHs}\,A_{s-n50}\,\ell_{sE}}{A_{pEI-n50}\,\ell_{pE} + A_{s-n50}\,\ell_{sE}}$$

$A_{pEI\text{-}n50}$: Effective area, in cm^2, equal to:
$A_{pEI\text{-}n50} = 10\,b_{E1}\,t_{n50}$

ℓ_{pE} : Distance, in mm, measured from the neutral axis of the stiffener with attached plate of width b_{E1} to the bottom of the attached plate.

ℓ_{sE} : Distance, in mm, measured from the neutral axis of the stiffener with attached plating of width b_{E1} to the top of the stiffener.

ε : Relative strain, as defined in [2.3.3].

σ_{E1} : Euler column buckling stress, in N/mm^2, equal to:

$$\sigma_{E1} = \pi^2 E \frac{I_{E-n50}}{A_{E-n50}\,\ell^2}\,10^{-4}$$

$I_{E\text{-}n50}$: Net moment of inertia of stiffeners, in cm^4, with attached plating of width b_{E1}.

$A_{E\text{-}n50}$: Net area, in cm^2, of stiffeners with attached plating of width b_E.

b_{E1} : Effective width corrected for relative strain, in m, of the attached plating, equal to:

$$b_{E1} = \frac{s}{\beta_E} \quad \text{for } \beta_E > 1.0$$

$$b_{E1} = s \quad \text{for } \beta_E \le 1.0$$

β_E : $\beta_E = 10^3 \dfrac{s}{t_{n50}} \sqrt{\dfrac{\varepsilon\, R_{eHp}}{E}}$

$A_{pE\text{-}n50}$: Net sectional area, in cm^2, of attached plating of width b_E, equal to:

$$A_{pE\text{-}n50} = 10\, b_E\, t_{n50}$$

b_E : Effective width, in m, of the attached plating, equal to:

$$b_E = \left(\frac{2.25}{\beta_E} - \frac{1.25}{\beta_E^2}\right) s \quad \text{for } \beta_E > 1.25$$

$$b_E = s \quad \text{for } \beta_E \le 1.25$$

Figure 8 : Load-end shortening curve σ_{CR1}-ε for beam column buckling

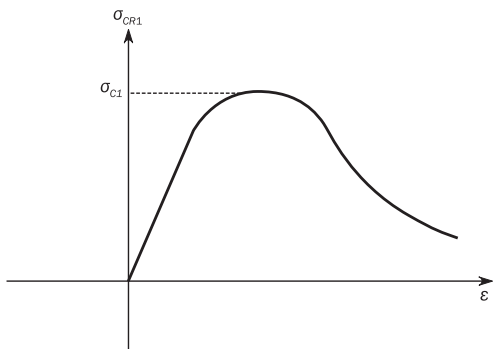

2.3.5 Torsional buckling

The equation describing the load-end shortening curve σ_{CR2}-ε for the flexural-torsional buckling of stiffeners composing the hull girder transverse section is to be obtained according to the following formula, see Figure 9.

$$\sigma_{CR2} = \Phi \frac{A_{S-n50}\,\sigma_{C2} + A_{p-n50}\,\sigma_{CP}}{A_{S-n50} + A_{p-n50}}$$

where:

Φ : Edge function, as defined in [2.3.3].

σ_{C2} : Critical stress, in N/mm^2, equal to:

$$\sigma_{C2} = \frac{\sigma_{E2}}{\varepsilon} \quad \text{for } \sigma_{E2} \le \frac{R_{eHs}}{2}\,\varepsilon$$

$$\sigma_{C2} = R_{eHs}\left(1 - \frac{R_{eHs}\,\varepsilon}{4\sigma_{E2}}\right) \quad \text{for } \sigma_{E2} > \frac{R_{eHs}}{2}\,\varepsilon$$

σ_{E2} : Euler torsional buckling stress, in N/mm^2, taken as σ_{ET} in Ch 8, Sec 5, [2.3.4]

ε : Relative strain, as defined in [2.3.3].

σ_{CP} : Buckling stress of the attached plating, in N/mm^2, equal to:

$$\sigma_{CP} = \left(\frac{2.25}{\beta_E} - \frac{1.25}{\beta_E^2}\right) R_{eHp} \quad \text{for } \beta_E > 1.25$$

$$\sigma_{CP} = R_{eHp} \quad \text{for } \beta_E \le 1.25$$

β_E : Coefficient, as defined in [2.3.4].

Figure 9 : Load-end shortening curve σ_{CR2}-ε for flexural-torsional buckling

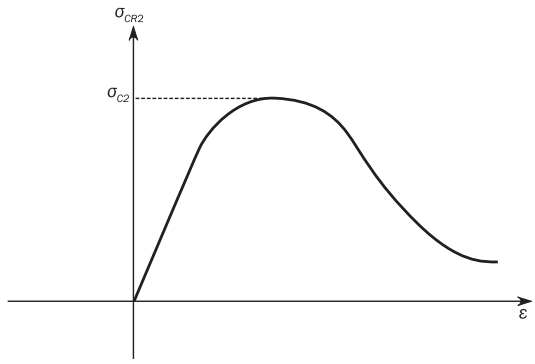

2.3.6 Web local buckling of stiffeners made of flanged profiles

The equation describing the load-end shortening curve σ_{CR3}-ε for the web local buckling of flanged stiffeners composing the hull girder transverse section is to be obtained from the following formula:

$$\sigma_{CR3} = \Phi \frac{10^3\ b_E\ t_{n50}\ R_{eHp} + (h_{we}\ t_{w-n50} + b_f\ t_{f-n50})\ R_{eHs}}{10^3\ s t_{n50} + h_w\ t_{w-n50} + b_f\ t_{f-n50}}$$

where:

Φ : Edge function, as defined in [2.3.3].

b_E : Effective width, in m, of the attached shell plating, as defined in [2.3.4].

h_{we} : Effective height, in mm, of the web, equal to:

$$h_{we} = \left(\frac{2.25}{\beta_w} - \frac{1.25}{\beta_w^2}\right) h_w \quad \text{for } \beta_w \ge 1.25$$

$$h_{we} = h_w \quad \text{for } \beta_w < 1.25$$

β_w : $\beta_w = \dfrac{h_w}{t_{w-n50}} \sqrt{\dfrac{\varepsilon\ R_{eHs}}{E}}$

ε : Relative strain, as defined in [2.3.3].

2.3.7 Web local buckling of stiffeners made of flat bars

The equation describing the load-end shortening curve σ_{CR4}-ε for the web local buckling of flat bar stiffeners composing the hull girder transverse section is to be obtained from the following formula, see Figure 10:

$$\sigma_{CR4} = \Phi\ \frac{A_{P-n50}\ \sigma_{CP} + A_{s-n50}\ \sigma_{C4}}{A_{p-n50} + A_{s-n50}}$$

where:

Φ : Edge function, as defined in [2.3.3].

σ_{CP} : Buckling stress of the attached plating, in N/mm^2, as defined in [2.3.5].

σ_{C4} : Critical stress, in N/mm^2, equal to:

$$\sigma_{C4} = \frac{\sigma_{E4}}{\varepsilon} \qquad \text{for } \sigma_{E4} \le \frac{R_{eHs}}{2}\varepsilon$$

$$\sigma_{C4} = R_{eHs}\left(1 - \frac{R_{eHs}\,\varepsilon}{4\sigma_{E4}}\right) \qquad \text{for } \sigma_{E4} > \frac{R_{eHs}}{2}\varepsilon$$

σ_{E4} : Local Euler buckling stress, in N/mm^2, equal to:

$$\sigma_{E4} = 160000\left(\frac{t_{w-n50}}{h_w}\right)^2$$

ε : Relative strain, as defined in [2.3.3].

Figure 10 : Load-end shortening curve σ_{CR4}-ε for web local buckling

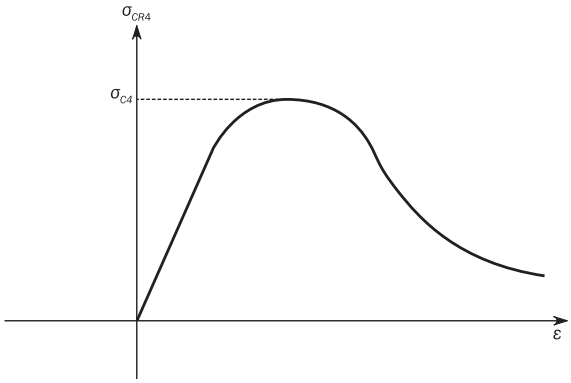

2.3.8 Plate buckling

The equation describing the load-end shortening curve σ_{CR5}-ε for the buckling of transversely stiffened panels composing the hull girder transverse section is to be obtained from the following formula:

$$\sigma_{CR5} = min\begin{cases} R_{eHp}\Phi \\ \Phi R_{eHp}\left[\frac{s}{\ell}\left(\frac{2.25}{\beta_E} - \frac{1.25}{\beta_E^2}\right) + 0.1\left(1 - \frac{s}{\ell}\right)\left(1 + \frac{1}{\beta_E^2}\right)^2\right] \end{cases}$$

where:

Φ : Edge function, as defined in [2.3.3].

β_E : $\beta_E = 10^3 \frac{s}{t_{n50}}\sqrt{\frac{\varepsilon\, R_{eHp}}{E}}$

s : Plate breadth, in m, taken as the spacing between the stiffeners.

ℓ : Longer side of the plate, in m.

3 ALTERNATIVE METHODS

3.1 General

3.1.1

The bending moment-curvature relationship, M-χ, may be established by alternative methods. Such models are to consider all the relevant effects important to the non-linear response with due considerations of:

a) Non-linear geometrical behaviour.

b) Inelastic material behaviour.

c) Geometrical imperfections and residual stresses (geometrical out-of-flatness of plate and stiffeners).

d) Simultaneously acting loads:

- Bi-axial compression.
- Bi-axial tension.
- Shear and lateral pressure.

e) Boundary conditions.

f) Interactions between buckling modes.

g) Interactions between structural elements such as plates, stiffeners, girders, etc.

h) Post-buckling capacity.

i) Overstressed elements on the compression side of hull girder cross section possibly leading to local permanent sets/buckle damages in plating, stiffeners etc (double bottom effects or similar).

3.2 Non-linear finite element analysis

3.2.1

Advanced non-linear finite element analyses models may be used for the assessment of the hull girder ultimate capacity. Such models are to consider the relevant effects important to the non-linear responses with due consideration of the items listed in [3.1.1].

3.2.2

Particular attention is to be given to modelling the shape and size of geometrical imperfections. It is to be ensured that the shape and size of geometrical imperfections trigger the most critical failure modes.

PART 1 CHAPTER 6

HULL LOCAL SCANTLING

Table of Contents

SECTION 1
General
1 Application
SECTION 2
Load Application
1 Load Combination
2 Design Load Sets
SECTION 3
Minimum Thicknesses
1 Plating
2 Stiffeners and Tripping Brackets
3 Primary Supporting Members
SECTION 4
Plating
1 Plating Subjected to Lateral Pressure
2 Special Requirements
SECTION 5
Stiffeners
1 Stiffeners Subject to Lateral Pressure
SECTION 6
Primary Supporting Members and Pillars
1 General
2 Primary Supporting Members Within Cargo Hold Region
3 Primary Supporting Members Outside Cargo Hold Region
4 Pillars

SECTION 1
GENERAL

1 APPLICATION

1.1 Application

1.1.1

This chapter applies to hull structure over the full length of the ship including fore end, cargo hold region, machinery space and aft end, the side shell above the freeboard deck, engine casing, exposed decks of superstructure and internal decks except those inside superstructure and deckhouse.

1.1.2

This chapter provides requirements for evaluation of plating, stiffeners and Primary Supporting Members (PSM) subject to lateral pressure, local loads and to hull girder loads, as applicable. Requirements are specified for:

- Load application in Ch 6, Sec 2.
- Minimum thickness of plates, stiffeners and PSM in Ch 6, Sec 3.
- Plating in Ch 6, Sec 4.
- Stiffeners in Ch 6, Sec 5.
- PSM and pillars in Ch 6, Sec 6.

In addition, other requirements not related to defined design load sets, are provided.

1.1.3 Required scantlings

The offered net scantling is to be greater than or equal to the required scantlings based on requirements provided in this chapter.

1.1.4 Additional local strength requirements

Additional local strength requirements are provided in Ch 10 considering bow impact loads, bottom slamming loads and sloshing loads, and for fore end, machinery space and aft end.

1.2 Acceptance criteria

1.2.1

Acceptance criteria set to be selected based on design load as follows:

- AC-S for design load S; static loads.
- AC-SD for design load S+D; combination of static and dynamic loads.

SECTION 2
LOAD APPLICATION

SYMBOLS

For symbols not defined in this section, refer to Ch 1, Sec 4.

1 LOAD COMBINATION

1.1 Hull girder bending

1.1.1 Normal stresses

The normal stress σ_{hg}, in N/mm^2, induced by acting vertical and horizontal bending moments at the position being considered is given as follow. This stress is to be calculated for each design load set, as defined in [2] covering all dynamic load cases defined in Ch 4 in combination with M_{sw} both in hogging and in sagging.

$$\sigma_{hg} = \left(\frac{M_{sw} + M_{wv-LC}}{I_{y-n50}} (z - z_n) - \frac{M_{wh-LC}}{I_{z-n50}} y \right) 10^{-3}$$

where:

M_{sw} : Still water bending moment, in kNm, as defined in Ch 4, Sec 4, [2.2] in accordance with the considered design load scenario in Ch 4, Sec 7, Table 1.

M_{wv-LC} : Vertical wave bending moment, in kNm, of the considered dynamic load case, as defined in Ch 4, Sec 4, [3.5.2] in accordance with the considered design load scenario in Ch 4, Sec 7, Table 1, at the considered longitudinal position.

M_{wh-LC} : Horizontal wave bending moment, in kNm, of the considered dynamic load case, as defined in Ch 4, Sec 4, [3.5.4] in accordance with the considered design load scenario in Ch 4, Sec 7, Table 1, at the considered longitudinal position.

I_{y-n50} : Net vertical hull girder moment of inertia, at the longitudinal position being considered, in m^4.

I_{z-n50} : Net horizontal hull girder moment of inertia, at the longitudinal position being considered, in m^4.

y : Transverse coordinate of load calculation point, in m.

z : Vertical coordinate of the load calculation point under consideration, in m.

z_n : Distance from the baseline to the horizontal neutral axis, in m.

1.2 Lateral pressures

1.2.1 Static and dynamic pressures in intact conditions

The static and dynamic lateral pressures in intact condition induced by the sea and the various types of cargoes, ballast and other liquids are to be considered. Applied loads will depend on the location of the elements under consideration, and the adjacent type of compartments.

1.2.2 Lateral pressure in flooded conditions

Watertight boundaries of compartments not intended to carry liquids, excluding shell envelope, are to be subjected to lateral pressure in flooded conditions.

1.3 Pressure combination

1.3.1 Elements of the outer shell

If the compartment adjacent to the outer shell is intended to carry liquids, the static and dynamic lateral pressures to be considered are the differences between the internal pressures and the external sea pressures at the corresponding draught.

If the compartment adjacent to the outer shell is not intended to carry liquids, the internal pressures and external sea pressures are to be considered independently.

1.3.2 Elements other than those of the outer shell

Except as specified in [1.3.1], the static and dynamic lateral pressures on an element separating two adjacent compartments are those obtained considering the two compartments individually loaded.

2 DESIGN LOAD SETS

2.1 Application of load components

2.1.1 Application

These requirements apply to:

- Plating and stiffeners along the full length of the ship.
- PSM outside the cargo hold region.

2.1.2 Load components

The static and dynamic load components are to be determined in accordance with Ch 4, Sec 7, Table 1.

Radius of gyration, k_r, and metacentric height, GM, are to be in accordance with Ch 4, Sec 3, Table 1 and Ch 4, Sec 3, Table 2 for the considered loading conditions specified in the design load sets given in Table 1.

2.1.3 Design load sets for plating, stiffeners and PSM

Design load sets for plating, stiffeners and primary supporting members are given in Table 1.

In addition, the design load sets for primary supporting members of bulk carriers with length L less than 150 m and of oil tankers within the cargo hold region are given respectively in Pt 2, Ch 1, Sec 4, [4.2] and in Pt 2, Ch 2, Sec 3, [1.2].

Table 1 : Design load sets

Item	Design load set	Load component	Draught	Design load	Loading condition
External shell and exposed deck	SEA-1	P_{ex}, P_D	T_{SC}	S+D	Full Load condition (1)
	SEA-2	P_{ex}	T_{SC}	S	Harbour condition (2)
Water ballast tank (oil tanker and bulk carrier)	WB-1	$P_{in} - P_{ex}$ (3)	T_{BAL}	S+D	Normal ballast condition
	WB-2	$P_{in} - P_{ex}$ (3)	T_{BAL}	S+D	Normal ballast condition Water ballast exchange
	WB-3	$P_{in} - P_{ex}$ (3)	$0.25T_{SC}$	S	Harbour/test condition
Water ballast tank (bulk carrier) and bulk cargo hold assigned as ballast hold	WB-4	$P_{in} - P_{ex}$ (3)	T_{BAL-H} (7)	S+D	Heavy ballast condition
	WB-5 (4)	$P_{in} - P_{ex}$ (3)	T_{BAL-H} (7)	S+D	Heavy ballast condition Water ballast exchange
	WB-6 (5)	P_{in}	-	S	Harbour/test condition
Cargo oil tank	OT-1	P_{in}	T_{SC}	S+D	Full Load condition
	OT-2	P_{in}	$0.6T_{SC}$	S+D	Partial load condition
	OT-3	P_{in}	-	S	Harbour/Test condition
Bulk cargo hold	BC-1	P_{in}	T_{SC}	S+D	Homogeneous loading, fully filled
	BC-2	P_{in}	-	S	
	BC-3	P_{in}	T_{SC}	S+D	Homogeneous heavy cargo, partially filled (BC-A, B ships)
	BC-4	P_{in}	-	S	
	BC-5	P_{in}	T_{SC}	S+D	Alternate light cargo, fully filled (BC-A ships)
	BC-6	P_{in}	-	S	
	BC-7	P_{in}	T_{SC}	S+D	Alternate heavy cargo, partially filled (BC-A ships)
	BC-8	P_{in}	-	S	
Other tanks (fuel oil tank, fresh water tank)	TK-1	$P_{in} - P_{ex}$ (3)	T_{BAL}	S+D	Normal ballast condition
	TK-2	$P_{in} - P_{ex}$ (3)	$0.25T_{SC}$	S	Harbour/test condition
Compartments not carrying liquids	FD-1 (6)	P_{in}	T_{SC}	S+D	Flooded condition
	FD-2 (6)	P_{in}	-	S	Flooded condition
Exposed deck, internal decks or platforms	DL-1 (8)	P_{dl}, F_U	T_{SC}	S+D	Full load condition
	DL-2 (8)	P_{dl}, F_U	-	S	Harbour condition

(1) For bulk carrier BC-A and BC-B, full load condition means 'homogeneous heavy cargo'.
(2) For external shell only.
(3) P_{ex} is to be considered for external shell only.
(4) Not to be applied to bulk cargo hold assigned as ballast hold.
(5) Bulk cargo hold only.
(6) FD-1 and FD-2 are not applicable to external shell and corrugations of transverse vertically corrugated bulkhead separating cargo holds. Requirement in flooded conditions of transverse corrugated bulkhead are given in Pt 2, Ch 1, Sec 3, [3]. FD-1 and FD-2 are to be considered for strength deck whenever applicable.
(7) Minimum draught among heavy ballast conditions is to be used.
(8) Distributed or concentrated loads only. Need not be combined with simultaneously occurring green sea pressure.

SECTION 3
MINIMUM THICKNESSES

SYMBOLS

For symbols not defined in this section, refer to Ch 1, Sec 4.

1 PLATING

1.1 Minimum thickness requirements

1.1.1

The net thickness of plating in mm, is to comply with the appropriate minimum thickness requirements given in Table 1.

Table 1 : Minimum net thickness for plating

Element	Location	Area	Net thickness
Shell	Keel	-	7.5 + 0.03 L_2
	Bottom Side shell Bilge	Fore Part	6.5 + 0.03 L_2
		Machinery space Aft part	7.0 + 0.03 L_2
		Elsewhere	5.5 + 0.03 L_2
Breasthook		Fore part	6.5
Deck	Weather deck, strength deck, internal tank boundary	-	4.5 + 0.02 L_2
	Platform deck	Machinery space	2.8 + 0.0067 s
		Elsewhere	6.5
Inner bottom (1)	-	Machinery space	6.6 + 0.024 L_2
		Elsewhere	5.5 + 0.03 L_2
Longitudinal bulkheads of bulk carriers	Inner side, hopper tank top, top wing tank longitudinal bulkhead	Cargo hold region	0.7 $L_2^{1/2}$
Bulkheads	Internal tank boundary, Transverse/longitudinal watertight bulkhead	-	4.5 + 0.02 L_2
	Non-tight bulkhead, Wash bulkhead, Bulkheads between dry spaces.	-	4.5 + 0.01 L_2
	Pillar bulkheads in fore and aft peaks	-	7.5
Other members	Diaphragms in lower/upper stool	-	5.0 + 0.015 L_2
	Engine casing (in the cargo hold region)	Cargo hold region	5.5
	Engine casing (in way of accommodation)	Accommodation	4.0
	Other plates in general	-	4.5 + 0.01 L_2

(1) Applicable for both tight and non tight members

2 STIFFENERS AND TRIPPING BRACKETS

2.1 Minimum thickness requirements

2.1.1

The net thickness of the web and face plate, if any, of stiffeners and tripping brackets in mm, is to comply with the minimum net thickness given in Table 2.

In addition, the net thickness of the web of stiffeners and tripping brackets, in mm, is to be:

- Not less than 40% of the net required thickness of the attached plating, to be determined according to Ch 6, Sec 4.
- Less than twice the net offered thickness of the attached plating.

Table 2 : Minimum net thickness for stiffeners and tripping brackets

Element	Location	Net thickness
Stiffeners and attached end brackets	Watertight boundary	$3.5 + 0.015\ L_2$
	Other structure	$3.0 + 0.015\ L_2$
Cargo hold side frames webs of single side bulk carriers	Foremost hold (1)	$6.0 + 0.026\ L$
	Other holds (1)	$5.2 + 0.023\ L$
Tripping brackets		$5.0 + 0.015\ L_2$
(1) L needs not to be taken greater than 200 m		

3 PRIMARY SUPPORTING MEMBERS

3.1 Minimum thickness requirements

3.1.1

The net thickness of web plating and flange of primary supporting members in mm, is to comply with the minimum net thickness given in Table 3.

Table 3 : Minimum net thickness for primary supporting members

Element	Location		Net thickness
Double bottom centreline girder	Machinery space		$1.55\ L_2^{1/3} + 3.5$
	Elsewhere		$5.5 + 0.025\ L_2$
Other bottom girder	Machinery space		$1.7\ L_2^{1/3} + 1.0$
	Fore part of ships with $L \geq 150$ m		$0.7\ L_2^{1/2}$
	Elsewhere and fore part of ships with $L < 150$ m		$5.5 + 0.02\ L_2$
Girders bounding a duct keel	Machinery space		$0.8\ L_2^{1/2} + 2.5$
Bottom floor	Machinery space		$1.7\ L_2^{1/3} + 1.0$
	Fore part		$0.7\ L_2^{1/2}$
	Elsewhere		$0.6\ L_2^{1/2}$
Aft peak floor	-		$0.7\ L_2^{1/2}$
Other primary supporting member	Aft part / fore part		$0.7\ L_2^{1/2}$
	Elsewhere	In oil cargo tanks	$5.5 + 0.015\ L_2$
		For other cases	$0.6\ L_2^{1/2}$

SECTION 4
PLATING

SYMBOLS

For symbols not defined in this section, refer to Ch 1, Sec 4.

α_p : Correction factor for the panel aspect ratio to be taken as follow but not to be taken greater than 1.0.

$$\alpha_p = 1.2 - \frac{b}{2.1\,a}$$

a : Length of plate panel, in mm, as defined in Ch 3, Sec 7, [2.2.2].

b : Breadth of plate panel, in mm, as defined in Ch 3, Sec 7, [2.2.2].

P : Design pressure for the considered design load set, see Ch 6, Sec 2, [2], calculated at the load calculation point defined in Ch 3, Sec 7, [2.2], in kN/m^2.

σ_{hg} : Hull girder bending stress, in N/mm^2, as defined in Ch 6, Sec 2, [1.1], calculated at the load calculation point as defined in Ch 3, Sec 7, [2.2].

χ : Coefficient taken equal to:

- In intact condition:
  - χ = 0.70 for inner bottom or bilge hopper tank plating in cargo holds of bulk carriers,
  - χ = 1.00 for other cases.
- In flooded condition:
  - χ = 1.00 for collision bulkheads for acceptance criteria set AC-S,
  - χ = 0.95 for collision bulkheads for acceptance criteria set AC-SD,
  - χ = 1.15 for other watertight boundaries of compartments.

1 PLATING SUBJECTED TO LATERAL PRESSURE

1.1 Yielding check

1.1.1 Plating

The net thickness, t in mm, is not to be taken less than the greatest value for all applicable design load sets, as defined in Ch 6, Sec 2, [2.1.3], given by:

$$t = 0.0158\,\alpha_p\,b\sqrt{\frac{|P|}{\chi\,C_a\,R_{eH}}}$$

where:

C_a : Permissible bending stress coefficient for plate taken equal to:

$$C_a = \beta - \alpha \frac{|\sigma_{hg}|}{R_{eH}}$$, not to be taken greater than $C_{a\text{-}max}$.

β : Coefficient as defined in Table 1.

α : Coefficient as defined in Table 1.

$C_{a\text{-}max}$: Maximum permissible bending stress coefficient as defined in Table 1.

Table 1 : Definition β, α and $C_{a\text{-}max}$

Acceptance criteria set	Structural member		β	α	$C_{a\text{-}max}$
AC-S	Longitudinal strength members	Longitudinally stiffened plating	0.9	0.5	0.8
		Transversely stiffened plating	0.9	1.0	0.8
	Other members		0.8	0	0.8
AC-SD	Longitudinal strength members	Longitudinally stiffened plating	1.05	0.5	0.95
		Transversely stiffened plating	1.05	1.0	0.95
	Other members		1.0	0	1.0

1.2 Plating of corrugated bulkheads

1.2.1 Cold, hot formed and built up corrugations

The net thicknesses, t in mm, of the web and flange plates of corrugated bulkheads are not to be taken less than the greatest value calculated for all applicable design load sets, as defined in Ch 6, Sec 2, [2.1.3], given by:

$$t = 0.0158\, b_p \sqrt{\frac{|P|}{C_{CB}\, R_{eH}}}$$

where:

b_p : Breadth of plane corrugation plating:

$b_p = a$ for flange plating, in mm, as defined in Ch 3, Sec 6, Figure 21.

$b_p = c$ for web plating, in mm, as defined in Ch 3, Sec 6, Figure 21.

C_{CB} : Permissible bending stress coefficient for corrugated bulkhead plating taken equal to:

- For acceptance criteria set AC-S for transverse corrugated bulkheads and vertically corrugated longitudinal bulkheads.

  $C_{CB} = 0.75$

- For acceptance criteria set AC-SD for transverse corrugated bulkheads and vertically corrugated longitudinal bulkheads.

  $C_{CB} = 0.90$

- For horizontally corrugated longitudinal bulkheads, without being greater than $C_{CB\text{-}max}$.

  $$C_{CB} = \beta_{CB} - \alpha_{CB} \frac{|\sigma_{hg}|}{R_{eH}}$$

β_{CB} : Coefficient as defined in Table 2.

α_{CB} : Coefficient as defined in Table 2.

$C_{CB\text{-}max}$: Maximum permissible bending stress coefficient as defined in Table 2.

Table 2 : Definition β_{CB}, α_{CB} and $C_{CB\text{-}max}$

Acceptance criteria set	Structural member	β_{CB}	α_{CB}	$C_{CB\text{-}max}$
AC-S	Horizontally corrugated longitudinal bulkheads	0.90	0.50	0.75
AC-SD	Horizontally corrugated longitudinal bulkheads	1.05	0.50	0.90

1.2.2 Built-up corrugations

For built-up corrugations, with flange and web plate of different thickness, the net thickness, t_1 in mm, is to be taken as the greatest value calculated for all applicable design load sets, as defined in Ch 6, Sec 2, [2.1.3], given by:

$$t_1 = \sqrt{\frac{0.0005\, b_P^{\,2}\, |P|}{C_{CB}\, R_{eH}} - t_2^{\,2}}$$

where:

t_1 : Net thickness of the thicker plating, either flange or web, in mm.

t_2 : Net thickness of the thinner plating, either flange or web, in mm.

b_P : Breadth of thicker plate, either flange or web, in mm.

C_{CB} : Permissible bending stress coefficient as defined in [1.2.1].

2 SPECIAL REQUIREMENTS

2.1 Minimum thickness of keel plating

2.1.1

The net thickness of the keel plating is not to be taken less than the offered net thickness of the adjacent 2 m width bottom plating, measured from the edge of the keel strake.

The width of the keel is defined in Ch 3, Sec 6, [7.2.1].

2.2 Bilge plating

2.2.1 Definition of bilge area

The definition of bilge area is given in Ch 1, Sec 4, [3.8.1].

2.2.2 Bilge plate thickness

a) The net thickness of bilge plating is not to be taken less than the offered net thickness for the adjacent bottom shell or adjacent side shell plating, whichever is greater.

b) The net thickness of rounded bilge plating, t, in mm, is not to be taken less than:

$$t = 6.45 \times 10^{-4}\, (P_{ex}\, s_b)^{0.4}\, R^{0.6}$$

where:

P_{ex} : Design sea pressure for the design load set SEA-1 as defined in Ch 6, Sec 2, [2.1.3] calculated at the lower turn of the bilge, in kN/m^2.

R : Effective bilge radius in mm.

$$R = R_0 + 0.5\, (\Delta s_1 + \Delta s_2)$$

R_0 : Radius of curvature, in mm. See Figure 1.

Δs_1 : Distance between the lower turn of bilge and the outermost bottom longitudinal, in mm, see Figure 1. Where the outermost bottom longitudinal is within the curvature, this distance is to be taken as zero.

Δs_2 : Distance between the upper turn of bilge and the lowest side longitudinal, in mm, see Figure 1. Where the lowest side longitudinal is within the curvature, this distance is to be taken as zero.

s_b : Distance between transverse stiffeners, webs or bilge brackets, in mm.

c) Longitudinally stiffened bilge plating is to be assessed as regular stiffened plating. The bilge thickness is not to be less than the lesser of the value obtained by [1.1.1] and [2.2.2] b). A bilge keel is not considered as an effective 'longitudinal stiffening' member.

2.2.3 Transverse extension of bilge minimum plate thickness

Where a plate seam is located in the straight plate just below the lowest stiffener on the side shell, any increased thickness required for the bilge plating does not have to be extended to the adjacent plate above the bilge provided the plate seam is not more than $s_2/4$ below the lowest side longitudinal. Similarly, for the flat part of adjacent bottom plating, any increased thickness for the bilge plating does not have to be extended to the adjacent plate provided that the plate seam is not more than $s_1/4$ beyond the outboard bottom longitudinal. For definition of s_1 and s_2, see Figure 1.

Figure 1 : Transverse stiffened bilge plating

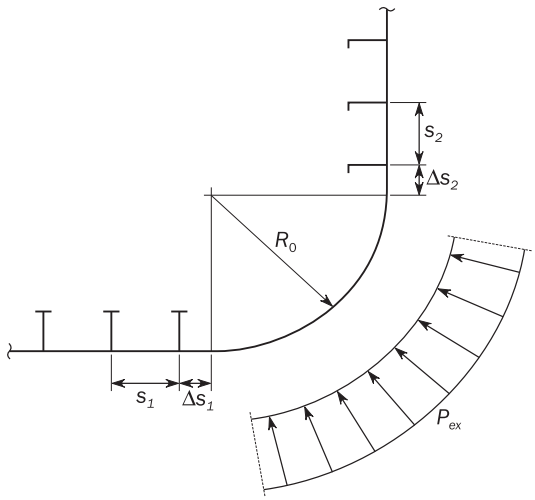

2.2.4 Hull envelope framing in bilge area

For transversely stiffened bilge plating, a longitudinal is to be fitted at the bottom and at the side close to the position where the curvature of the bilge plate starts. The scantling of those longitudinals are to be not less than the one of the closer adjacent stiffener. The distance between the lower turn of bilge and the outermost bottom longitudinal, Δs_1, is generally not to be greater than one-third of the spacing between the two outermost bottom longitudinals, s_1. Similarly, the distance between the upper turn of the bilge and the lowest side longitudinal, Δs_2, is generally not to be greater than one-third of the spacing between the two lowest side longitudinals, s_2. See Figure 1.

2.3 Side shell plating

2.3.1 Fender contact zone

The net thickness, t in mm, of the side shell plating within the fender contact zone as specified in [2.3.2] is not to be taken less than:

$$t = 26\left(\frac{b}{1000} + 0.7\right)\left(\frac{BT_{SC}}{R_{eH}^{\ 2}}\right)^{0.25}$$

2.3.2 Application of fender contact zone requirement

The application extends within the cargo hold region as defined in Ch 1, Sec 1, [2.4.3], from the ballast draught T_{BAL} to 0.25 T_{SC} (minimum 2.2 m) above T_{SC}.

2.4 Sheer strake

2.4.1 General

The minimum width of the sheer strake is defined in Ch 3, Sec 6, [8.2.4].

2.4.2 Welded sheer strake

The net thickness of a welded sheer strake is not to be less than the offered net thickness of the adjacent 2 m width side plating, provided this plating is located entirely within the top wing tank or double side tank as the case may be.

2.4.3 Rounded sheer strake

The net thickness of a rounded sheer strake is not to be less than:

- The offered net thickness of the adjacent 2 m width deck plating, or
- The offered net thickness of the adjacent 2 m width side plating,

whichever is greater.

2.5 Deck stringer plating

2.5.1

The minimum width of deck stringer plating is defined in Ch 3, Sec 6, [9.1.2].

2.5.2

Within 0.6 *L* of amidships, the net thickness of the deck stringer plate is not to be less than the offered net thickness of the adjacent deck plating.

2.6 Supporting structure in way of corrugated bulkheads

2.6.1 General

Requirements for the arrangement of bulkhead as given in Ch 3, Sec 6, [10.4] are to be considered together with [2.6.2] to [2.6.4].

2.6.2 Lower stool

a) The net thickness of the stool top plate is not to be less than that required for the attached corrugated bulkhead and is to be of at least the same material yield strength as the attached corrugation. The extension of the top plate beyond the corrugation is not to be less than the as-built flange thickness of the corrugation.

b) The net thickness of the stool side plate, within the region of the corrugation depth from the stool top plate, is not to be less than the corrugated bulkhead flange net required thickness at the lower end and is to be of at least the same material yield strength. The net thickness may be reduced to 90% of corrugation flange thickness if continuity is provided between the corrugation web and supporting brackets inside the stool as defined in (c).

c) For oil tankers, continuity between corrugation web and lower stool supporting brackets is to be maintained inside the stool. Alternatively, lower stool supporting brackets inside the stool are to be aligned with every knuckle point of corrugation web.

d) The net thickness of supporting bracket is not to be less than 80% of the required net thickness of the corrugation webs and is to be of at least the same material yield strength.

e) The net thickness of supporting floors is not to be less than the net required thickness of the stool side plating (excluding the application of GRAB requirements as defined in Pt 2, Ch 1, Sec 6) connected to the inner bottom and is to be of at least the same material yield strength. If material of different yield strength is used, the required thickness is to be adjusted by the ratio of the two material factors *k*, as defined in Ch 3, Sec 1, [2.2.1].

f) Where a lower stool is fitted, particular attention is to be given to the through-thickness properties, and arrangements for continuity of strength, at the connection of the bulkhead stool to the inner bottom. For requirements for plates with specified through-thickness properties, see Ch 3, Sec 1, [2.5].

2.6.3 Upper stool

a) The net thickness of the stool bottom plate is not to be less than that required for the attached corrugated bulkhead and is to be of at least the same material yield strength as the attached corrugation. The extension of the top plate beyond the corrugation is not to be less than the as-built flange thickness of the corrugation.

b) The net thickness of the lower portion of stool side plating is not to be less than the greater of the following:

- The net thickness obtained from [1.1],
- 80% of the net thickness of the upper part of the bulkhead plating as required by
  - [1.2],
  - Pt 2, Ch 1, Sec 3, [3.1], or Pt 2, Ch 2, Sec 3, [2.2.1] as applicable,

  where the same material is used.

If materials of different yield strength are used, the required thickness is to be adjusted by the ratio of the two material factors k as defined in Ch 3, Sec 1, [2.2.1].

2.6.4 Local supporting structure in way of corrugated bulkheads without a lower stool

a) The net thickness of the supporting floors and pipe tunnel beams in way of a corrugated bulkhead are not to be less than the required net thickness of the corrugation flanges and are to be of at least the same material yield strength. The inner bottom and hopper tank in way of the corrugation is to be of at least the same material yield strength as the attached corrugation, and Z grade steel as defined in Ch 3, Sec 1, [2.5.1] is to be used unless through thickness properties are documented for approval.

b) Brackets/carlings arranged in line with the corrugation web are to have a depth of not less than 0.5 times the corrugation depth and a net thickness not less than 80% of the net thickness of the corrugation webs and are to be of at least the same material yield strength. Where support is provided by gussets with shedder plates instead of brackets/carlings, the height of the gusset plate, see h_G in Pt 2, Ch 1, Sec 3, Figure 5, is to be at least equal to the corrugation depth. The gusset plates are to be fitted in line with and between the corrugation flanges. The net thickness of the gusset and shedder plates is not to be less than 100% and 80%, respectively, of the net thickness of the corrugation flange and is to be of at least the same material yield strength.

2.7 Aft peak bulkhead

2.7.1

The net thickness of the aft peak bulkhead plating in way of the stern tube penetration is to be at least 1.6 times the required thickness for the bulkhead plating.

SECTION 5
STIFFENERS

SYMBOLS

For symbols not defined in this section, refer to Ch 1, Sec 4.

d_{shr} : Effective shear depth, in mm, as defined in Ch 3, Sec 7, [1.4.3].

ℓ_{bdg} : Effective bending span, in m, as defined in Ch 3, Sec 7, [1.1.2].

ℓ_{shr} : Effective shear span, in m, as defined in Ch 3, Sec 7, [1.1.3].

P : Design pressure for the design load set being defined in Ch 6, Sec 2 and calculated at the load calculation point defined in Ch 3, Sec 7, [3.2], in kN/m^2.

χ : Coefficient taken equal to:

- In intact condition:
  - χ = 0.90 for stiffeners attached to inner bottom or bilge hopper tank plating in cargo holds of bulk carriers,
  - χ = 1.00 for other cases.
- In flooded condition: χ as defined in Ch 6, Sec 4 for flooded condition.

1 STIFFENERS SUBJECT TO LATERAL PRESSURE

1.1 Yielding check

1.1.1 Web plating

The minimum net web thickness, t_w in mm, is not to be taken less than the greatest value calculated for all applicable design load sets as defined in Ch 6, Sec 2, [2], given by:

$$t_w = \frac{f_{shr}\ |P|\ s\ \ell_{shr}}{d_{shr}\ \chi\ C_t\ \tau_{eH}}$$ with $\chi\, C_t$ not to be taken greater than 1.0.

where:

f_{shr} : Shear force distribution factor taken as:

- For continuous stiffeners with fixed ends, f_{shr} is not to be taken less than:
  - f_{shr} = 0.5 for horizontal stiffeners and upper end of vertical stiffeners.
  - f_{shr} = 0.7 for lower end of vertical stiffeners.
- For stiffeners with reduced end fixity, variable load or being part of grillage, the requirement in [1.2] applies.

C_t : Permissible shear stress coefficient for the design load set being considered, taken as:

- C_t = 0.75 for acceptance criteria set AC-S.
- C_t = 0.90 for acceptance criteria set AC-SD.

1.1.2 Section modulus

The minimum net section modulus, Z in cm^3, is not to be taken less than the greatest value calculated for all applicable design load sets as defined in Ch 6, Sec 2, [2.1.3], given by:

$$Z = \frac{|P|\, s\, \ell_{bdg}^2}{f_{bdg}\, \chi\, C_s\, R_{eH}}$$

with χC_s not to be taken greater than 1.0.

where:

f_{bdg} : Bending moment factor taken as:

- For continuous stiffeners with fixed ends, f_{bdg} is not to be taken higher than:
  - f_{bdg} = 12 for horizontal stiffeners and upper end of vertical stiffeners.
  - f_{bdg} = 10 for lower end of vertical stiffeners.
- For stiffeners with reduced end fixity, variable load or being part of grillage, the requirement in [1.2] applies.

C_s : Permissible bending stress coefficient as defined in Table 1 for the design load set being considered.

σ_{hg} : Hull girder bending stress, in N/mm^2, as defined in Ch 6, Sec 2, [1.1], calculated at the load calculation point as defined in Ch 3, Sec 7, [3.2].

β_s : Coefficient as defined in Table 2.

α_s : Coefficient as defined in Table 2.

$C_{s\text{-}max}$: Coefficient as defined in Table 2.

Table 1 : Definition of C_s

Sign of hull girder bending stress, σ_{hg}	Lateral pressure acting on	Coefficient C_s
Tension (positive)	Stiffener side	$C_s = \beta_s - \alpha_s \frac{\lvert\sigma_{hg}\rvert}{R_{eH}}$ but not to be taken greater than $C_{s\text{-}max}$
Compression (negative)	Plate side	
Tension (positive)	Plate side	$C_s = C_{s\text{-}max}$
Compression (negative)	Stiffener side	

Table 2 : Definition of β_s, α_s and $C_{s\text{-}max}$

Acceptance criteria set	Structural member	β_s	α_s	$C_{s\text{-}max}$
AC-S	Longitudinal strength member	0.85	1.0	0.75
	Transverse or vertical member	0.75	0	0.75
AC-SD	Longitudinal strength member	1.0	1.0	0.9
	Transverse or vertical member	0.9	0	0.9

1.1.3 Group of stiffeners

Scantlings of stiffeners based on requirements in [1.1.1] and [1.1.2] may be decided based on the concept of grouping designated sequentially placed stiffeners of equal scantlings on a single stiffened panel between primary supporting members. The scantling of the group is to be taken as the greater of the following:

- The average of the required scantling of all stiffeners within a group.
- 90% of the maximum scantling required for any one stiffener within the group.

1.1.4 Plate and stiffener of different materials

When the minimum specified yield stress of a stiffener exceeds the minimum specified yield stress of the attached plate by more than 35%, the following criterion is to be satisfied:

$$R_{eH-S} \le \left(R_{eH-P} - \frac{\alpha_S\,|\sigma_{hg}|}{\beta_S}\right)\frac{Z_P}{Z} + \frac{\alpha_S\,|\sigma_{hg}|}{\beta_S}$$

where:

$R_{eH\text{-}S}$: Minimum specified yield stress of the material of the stiffener, in N/mm^2.

$R_{eH\text{-}P}$: Minimum specified yield stress of the material of the attached plate, in N/mm^2.

σ_{hg} : Hull girder bending stress, in N/mm^2, as defined in Ch 6, Sec 2, [1.1] with $|\sigma_{hg}|$ not to be taken less than 0.4 $R_{eH\text{-}P}$.

Z : Net section modulus, in way of face plate/free edge of the stiffener, in cm^3.

Z_P : Net section modulus, in way of the attached plate of stiffener, in cm^3.

α_s, β_s : Coefficients defined in Table 2.

1.2 Beam analysis

1.2.1 Direct analysis

The maximum normal bending stress, σ and shear stress, τ in a stiffener using net properties with reduced end fixity, variable load or being part of grillage are to be determined by direct calculations taking into account:

- The distribution of static and dynamic pressures and forces, if any.
- The number and position of intermediate supports (e.g. decks, girders, etc).
- The condition of fixity at the ends of the stiffener and at intermediate supports.
- The geometrical characteristics of the stiffener on the intermediate spans.

1.2.2 Stress criteria

The stress is to comply with the following criteria where the coefficients C_t and C_s, are defined in [1.1.1] and [1.1.2].

- $\tau \le \chi\, C_t\, \tau_{eH}$
- $\sigma \le \chi\, C_s\, R_{eH}$

SECTION 6
PRIMARY SUPPORTING MEMBERS AND PILLARS

SYMBOLS

For symbols not defined in this section, refer to Ch 1, Sec 4.

P : Design pressure for the design load set being considered as defined in Ch 6, Sec 2 and calculated at the load calculation point as defined in Ch 3, Sec 7, [4.1.1], in kN/m^2.

ℓ_{bdg} : Effective bending span, as defined in Ch 3, Sec 7, [1.1.6], in m.

ℓ_{shr} : Effective shear span, as defined in Ch 3, Sec 7, [1.1.7], in m.

χ : Coefficient taken equal to:

- In intact condition:
  - χ = 0.90 for primary supporting members attached to inner bottom or bilge hopper tank plating in cargo holds of bulk carriers,
  - χ = 1.00 for other cases.
- In flooded condition: χ as defined in Ch 6, Sec 4 for flooded condition.

1 GENERAL

1.1 Application

1.1.1

The requirements of this section apply to primary supporting members subjected to lateral pressure and concentrated loads and pillars subjected to compressive axial loads. The yielding check is to be carried out for such members subjected to specific loads.

2 PRIMARY SUPPORTING MEMBERS WITHIN CARGO HOLD REGION

2.1 Flooded condition

2.1.1

The requirements in this sub-article apply to the primary supporting members of watertight boundaries other than outer shell or tank boundaries, subject to lateral pressure in flooded condition.

2.1.2

The verification against flooded condition is to be made by using the pressure and hull girder loads for the appropriate design load set as defined in Ch 6, Sec 2 and the scantling requirements given in [3.2].

2.2 Bulk carriers

2.2.1 Bulk carriers having a length *L* of 150m and above

The scantlings of primary supporting members within the cargo hold region are to be verified by FE structural analysis as defined in Ch 7.

2.2.2 Bulk carriers having a length *L* less than 150m

The scantlings of primary supporting members within the cargo hold region are to comply with the requirements given in Pt 2, Ch 1, Sec 4, [4]. Alternatively, the scantlings of such members may be verified by direct strength assessment as deemed appropriate by the Society.

2.3 Oil tankers

2.3.1

Scantlings of primary supporting members within the cargo hold region are to comply with the requirements given in Pt 2, Ch 2, Sec 3, [1] and are to be verified by FE structural analysis, as defined in Ch 7.

3 PRIMARY SUPPORTING MEMBERS OUTSIDE CARGO HOLD REGION

3.1 Application

3.1.1

The requirements of this article apply to primary supporting members, subjected to lateral pressure within the fore part, aft part and machinery space.

3.2 Scantling requirements

3.2.1 Net section modulus

The net section modulus, Z_{n50} in cm^3, of primary supporting members subjected to lateral pressure is not to be taken less than the greatest value for all applicable design load sets defined in Ch 6, Sec 2, [2], given by:

$$Z_{n50} = 1000 \frac{|P| \; S \; \ell_{bdg}{}^2}{\chi \; f_{bdg} \; C_s \; R_{eH}}$$

where:

f_{bdg} : Bending moment distribution factor, as given in Table 2.

C_s : Permissible bending stress coefficient for the acceptance criteria set, as given in Table 1.

3.2.2 Net shear area

The net shear area, $A_{shr\text{-}n50}$ in cm^2, of primary supporting members subjected to lateral pressure is not to be taken less than the greatest value for all applicable design load sets defined in Ch 6, Sec 2, [2], given by:

$$A_{shr-n50} = 10 \frac{f_{shr} \; |P| \; S \; \ell_{shr}}{\chi \; C_t \; \tau_{eH}}$$

where:

f_{shr} : Shear force distribution factor, as given in Table 2.

C_t : Permissible shear stress coefficient for the acceptance criteria set being considered, as given in Table 1.

Table 1 : Permissible bending and shear stress coefficients for primary supporting members

Acceptance criteria set	Structure attached to primary supporting member	C_s and C_t
AC-S	All boundaries, including decks and flats	0.70
AC-SD	All boundaries, including decks and flats	0.85

Table 2 : Bending moment and shear force factors, f_{bdg} and f_{shr}

Load and boundary condition				Bending moment and shear force distribution factors (based on load at mid span, where load varies)		
Position				1	2	3
Load model	1 Support	2 Field	3 Support	f_{bdg1} f_{shr1}	f_{bdg2} -	f_{bdg3} f_{shr3}
A	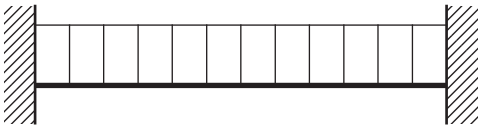			12.0 0.50	24.0 -	12.0 0.50
B	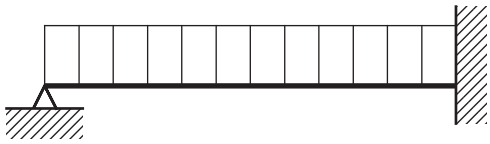			- 0.38	14.2 -	8.0 0.63
C	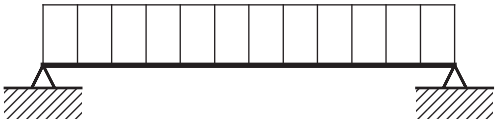			- 0.50	8.0 -	- 0.50
D	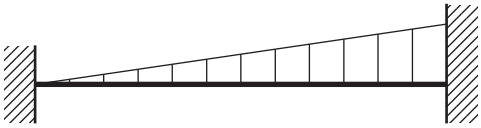			15.0 0.30	23.3 -	10.0 0.70
E	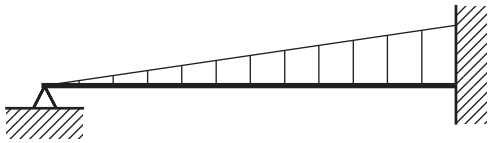			- 0.20	16.8 -	7.5 0.80
F	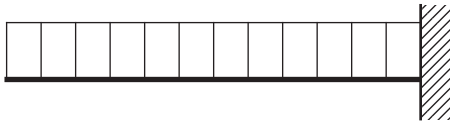			- -	- -	2.0 1.0

Note 1: The bending moment distribution factor, f_{bdg} for the support positions is applicable for a distance of 0.2 ℓ_{bdg} from the end of the effective bending span of the primary supporting member.

Note 2: The shear force distribution factor, f_{shr} for the support positions is applicable for a distance of 0.2 ℓ_{shr} from the end of the effective shear span of the primary supporting member.

Note 3: Application of f_{bdg} and f_{shr}:

The section modulus requirement within 0.2 ℓ_{bdg} from the end of the effective span is to be determined using the applicable f_{bdg1} and f_{bdg3}, however f_{bdg} is not to be taken greater than 12.

The section modulus of mid-span area is to be determined using f_{bdg} = 24, or f_{bdg2} from the table if lesser.

The shear area requirement of end connections within 0.2 ℓ_{shr} from the end of the effective span is to be determined using f_{shr} = 0.5 or the applicable f_{shr1} or f_{shr3}, whichever is greater.

For models A through F, the value of f_{shr} may be gradually reduced outside of 0.2 ℓ_{shr} towards 0.5 f_{shr} at mid-span, where f_{shr} is the greater value of f_{shr1} and f_{shr3}.

3.3 Advanced calculation methods

3.3.1 Direct analysis

Where complex grillage structures are employed or cross ties are fitted in side shell primary supporting members, the scantlings are to be determined by direct calculation taking into account:

- The distribution of still water and wave pressure and forces, if any.
- The number and position of intermediate supports (e.g. decks, girders, etc).
- The condition of fixity at the ends of the primary supporting members and at intermediate supports.
- The geometrical characteristics of the primary supporting members on the intermediate spans.

3.3.2 Analysis criteria

The calculated stresses are to comply with the following criteria where the coefficients C_t and C_s, are defined in [3.2]:

- $\sigma \leq \chi C_s R_{eH}$
- $\tau \leq \chi C_t \tau_{eH}$

where:

τ : Shear stress in member, in N/mm^2, based on t_{n50}.

σ : Normal stress in member, in N/mm^2, based on t_{n50}.

4 PILLARS

4.1 Pillars subjected to compressive axial load

4.1.1 Criteria

The maximum applied compressive axial load on a pillar, F_{pill}, in kN, is to be taken as the greatest value calculated for all applicable design load sets defined in Ch 6, Sec 2, [2], and is given by the following formula:

$$F_{pill} = Pb_{a-sup}\ \ell_{a-sup} + F_{pill-upr}$$

where:

$b_{a\text{-}sup}$: Mean breadth of area supported, in m.

$\ell_{a\text{-}sup}$: Mean length of area supported, in m.

$F_{pill\text{-}upr}$: Axial load from pillar including axial load from pillars above, in kN, if any.

$A_{pill\text{-}n50}$: Net cross section area of the pillar, in cm^2.

The buckling check of the pillar is to be performed according to Ch 8, Sec 4, [5.1], with σ_{av} in N/mm^2, as defined in Ch 8, Sec 5, [3.1] given by:

$$\sigma_{av} = 10\frac{F_{pill}}{A_{pill-n50}}$$

4.2 Pillars subject to tensile axial load

4.2.1 Criteria

Pillars and PSM members subjected to tensile axial load are to satisfy the criteria given in [3.3.2].

PART 1 CHAPTER 7

DIRECT STRENGTH ANALYSIS

Table of Contents

SECTION 1
Strength Assessment
1 General
2 Net Scantling
3 Finite Element Types
4 Submission of Results
5 Computer Programs
SECTION 2
Cargo Hold Structural Strength Analysis
1 Objective and Scope
2 Structural Model
3 FE Load Combinations
4 Load Application
5 Analysis Criteria
SECTION 3
Local Structural Strength Analysis
1 Objective and Scope
2 Local Areas to be Assessed by Fine Mesh Analysis
3 Screening Procedure
4 Structural Modelling
5 FE Load Combinations
6 Analysis Criteria

SECTION 1
STRENGTH ASSESSMENT

1 GENERAL

1.1 Application

1.1.1

This chapter provides requirements applicable to ships having rule length *L* of 150 m or above to assess the scantlings of the hull structure using finite element analysis.

1.1.2

The finite element analysis consists of three parts:

a) Cargo hold analysis to assess the strength of longitudinal hull girder structural members, primary supporting structural members and bulkheads.

b) Fine mesh analysis to assess detailed stress levels in local structural details.

c) Very fine mesh analysis to assess the fatigue capacity of the structural details according to Ch 9.

1.1.3

The strength assessment performed with finite element analysis is to verify that the scantlings comply with the acceptance criteria specified in this chapter for:

- Cargo hold structural analysis performed in accordance with Ch 7, Sec 2.
- Local structural analysis performed in accordance with Ch 7, Sec 3.

1.1.4

Strength assessment based on finite element analysis is applicable for the entire cargo hold region.

1.1.5

The analysis is to verify the following:

a) Stress levels are within the acceptance criteria for yielding.

b) Buckling capability of plates and stiffened panels are within the acceptance criteria for bucking defined in Ch 8.

c) Fatigue capacity of structural details is within the acceptance criteria defined in Ch 9.

1.1.6

A flow diagram showing the minimum requirement of finite element analysis is shown in Figure 1.

Figure 1 : Flow diagram of finite element analysis

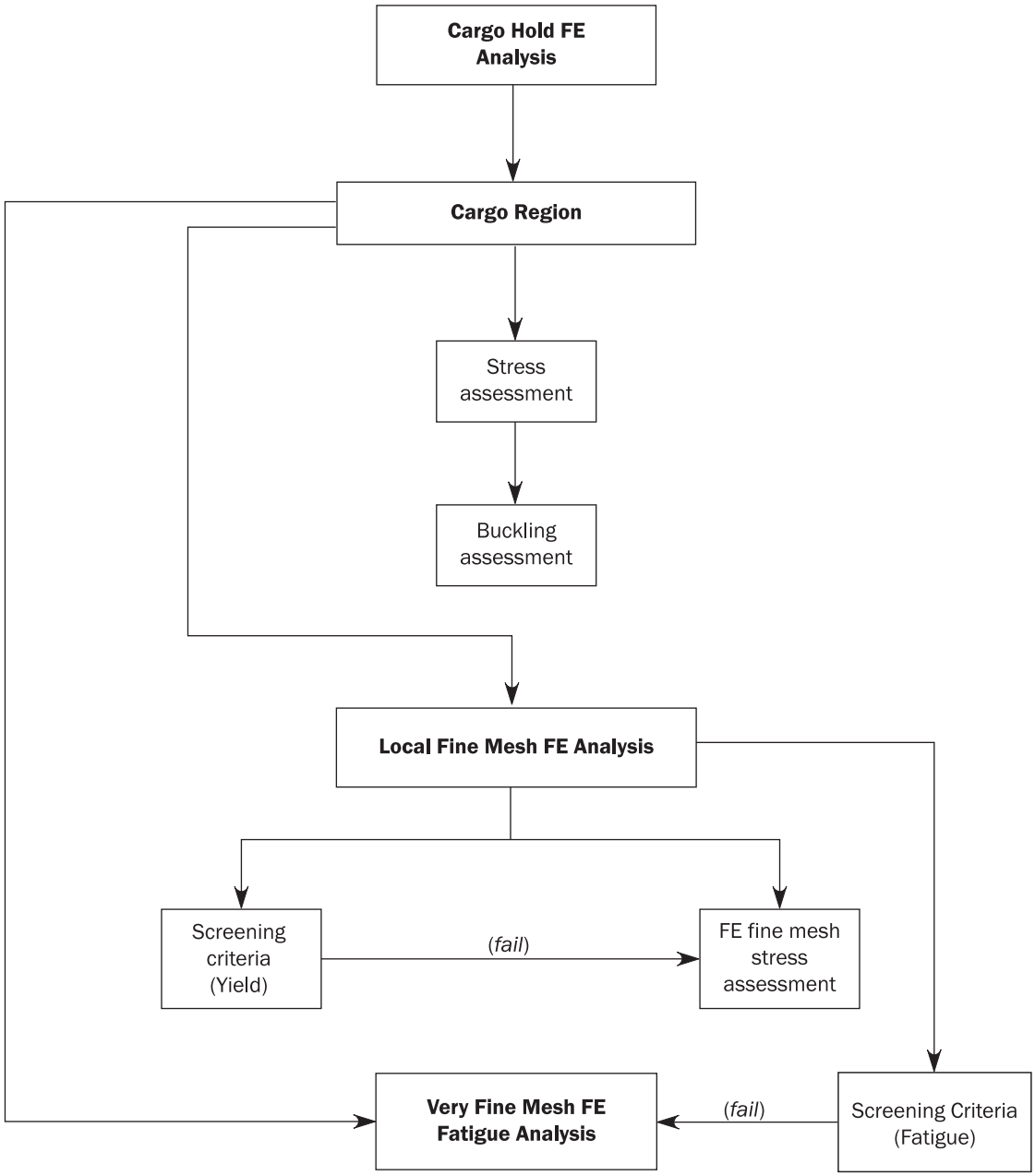

2 NET SCANTLING

2.1 Net scantling application

2.1.1

FE models for cargo hold FE analyses, local fine mesh FE analysis and very fine mesh FE analyses, are to be based on the net scantling approach, applying a corrosion addition as defined in Ch 3, Sec 2, Table 1.

All buckling capacity assessment are to be based on corrosion addition, as defined in Ch 3, Sec 2, Table 1.

3 FINITE ELEMENT TYPES

3.1 Used finite element types

3.1.1

The structural assessment is to be based on linear finite element analysis of three dimensional structural models. The general types of finite elements to be used in the finite element analysis are given in Table 1.

Table 1 : Types of finite element

Type of finite element	Description
Rod (or truss) element	Line element with axial stiffness only and constant cross sectional area along the length of the element.
Beam element	Line element with axial, torsional and bi-directional shear and bending stiffness and with constant properties along the length of the element.
Shell (or plate) element	Shell element with in-plane stiffness and out-of-plane bending stiffness with constant thickness.

3.1.2

Two node line elements and four node shell elements are, in general, considered sufficient for the representation of the hull structure. The mesh requirements given in this chapter are based on the assumption that these elements are used in the finite element models. However, higher order elements may also be used.

4 SUBMISSION OF RESULTS

4.1 Detailed report

4.1.1

A detailed report of the structural analysis is to be submitted by the designer/builder to demonstrate compliance with the specified structural design criteria. This report is to include the following information:

a) List of plans used including dates and versions.

b) Detailed description of structural modelling including all modelling assumptions and any deviations in geometry and arrangement of structure compared with plans.

c) Plots to demonstrate correct structural modelling and assigned properties.

d) Details of material properties, plate thickness, beam properties used in the model.

e) Details of boundary conditions.

f) Details of all loading conditions reviewed with calculated hull girder shear force, bending moment and torsional moment distributions.

g) Details of applied loads and confirmation that individual and total applied loads are correct.

h) Plots and results that demonstrate the correct behaviour of the structural model under the applied loads.

i) Summaries and plots of global and local deflections.

j) Summaries and sufficient plots of stresses to demonstrate that the design criteria are not exceeded in any member.

k) Plate and stiffened panel buckling analysis and results.

l) Tabulated results showing compliance, or otherwise, with the design criteria.

m) Proposed amendments to structure where necessary, including revised assessment of stresses, buckling and fatigue properties showing compliance with design criteria.

n) Reference of the finite element computer program, including its version and date.

5 COMPUTER PROGRAMS

5.1 Use of computer programs

5.1.1

Any finite element computation program complying with Ch 1, Sec 3 may be employed to determine the stress and deflection of the hull structure, provided that the combined effects of bending, shear, axial and torsional deformations are considered.

SECTION 2
CARGO HOLD STRUCTURAL STRENGTH ANALYSIS

SYMBOLS

For symbols not defined in this section, refer to Ch 1, Sec 4.

M_{sw} : Permissible vertical still water bending moment, in kNm, as defined in Ch 4, Sec 4.

M_{wv} : Vertical wave bending moment, in kNm, in hogging or sagging condition, as defined in Ch 4, Sec 4.

M_{wh} : Horizontal wave bending moment, in kNm, as defined in Ch 4, Sec 4.

M_{wt} : Wave torsional moment in seagoing condition, in kNm, as defined in Ch 4, Sec 4.

Q_{sw} : Permissible still water shear force, in kN, at the considered bulkhead position, as provided in Ch 4, Sec 4.

Q_{wv} : Vertical wave shear force, in kN, as defined in Ch 4, Sec 4.

$x_{b\text{-}aft}$, $x_{b\text{-}fwd}$: X-coordinate, in m, of respectively the aft and forward bulkhead of the mid-hold.

x_{aft} : *X*-coordinate, in m, of the aft end support of the FE model.

x_{fore} : *X*-coordinate, in m, of the fore end support of the FE model.

x_i : *X*-coordinate, in m, of web frame station *i*.

Q_{aft} : Vertical shear force, in kN, at aft bulkhead of mid-hold as defined in [4.4.6].

Q_{fwd} : Vertical shear force, in kN, at fore bulkhead of mid-hold as defined in [4.4.6].

$Q_{targ\text{-}aft}$: Target shear force, in kN, at the aft bulkhead of mid-hold as defined in [4.3.3].

$Q_{targ\text{-}fwd}$: Target shear force, in kN, at the forward bulkhead of mid-hold as defined in [4.3.3].

1 OBJECTIVE AND SCOPE

1.1 General

1.1.1

The cargo hold structural strength analysis is used for the assessment of scantlings of longitudinal hull girder structural members, primary supporting members and bulkheads within the cargo hold region. This section gives the requirements for cargo hold structural strength analysis.

1.1.2

Cargo hold structural strength analysis is mandatory within the cargo hold region including the aft bulkhead of the aftmost cargo hold and the collision bulkhead. The evaluation areas are defined in [5.1].

1.1.3

For the purpose of FE structural assessment and load application, the cargo hold region contains the following cargo hold regions, which may vary depending on the ship length and cargo hold arrangement, as defined in Figure 1:

- Midship cargo hold region,
- Forward cargo hold region,
- After cargo hold region,
- Foremost cargo hold(s),
- Aftmost cargo hold(s).

Figure 1 : Definition of cargo hold regions for FE structural assessment

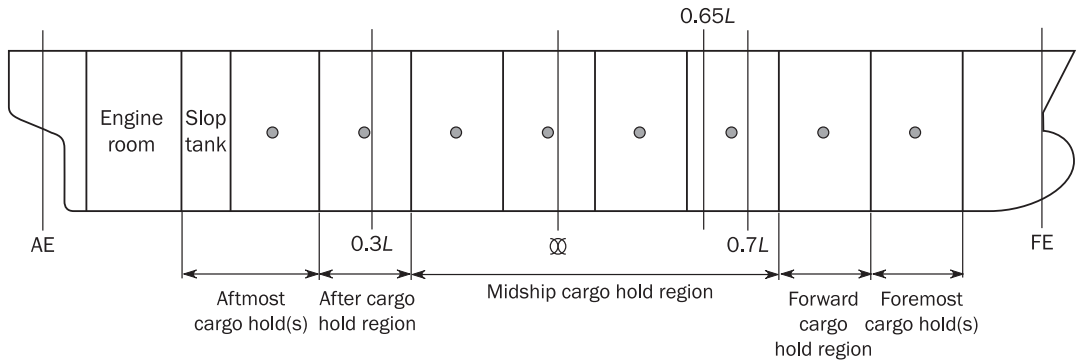

Holds in the forward cargo hold region are defined as holds with their longitudinal centre of gravity position forward of 0.7 *L* from AE, except foremost cargo hold.
Holds in the midship cargo hold region are defined as holds with their longitudinal centre of gravity position at or forward of 0.3 *L* from AE and at or aft of 0.7 *L* from AE.
Holds in the after cargo hold region are defined as holds with their longitudinal centre of gravity position aft of 0.3 *L* from AE, except aftmost cargo hold.
Foremost cargo hold(s) is (are) defined as hold(s) in the foremost location of the cargo hold region.
Aftmost cargo hold(s) is (are) defined as hold(s) in the aftmost location of the cargo hold region.

1.2 Cargo hold structural strength analysis procedure

1.2.1 Procedure description

The structural FE analysis is to be performed in accordance with the following:

- Model: Three cargo hold model with:
  - Extent as given in [2.2]
  - Finite element types as given in [2.3]
  - Structural modelling as defined in [2.4]
- Boundary conditions as defined in [2.5]
- FE load combinations as defined in [3]
- Load application as defined in [4]
- Evaluation area as defined in [5.1]
- Strength assessment as defined in [5.2] and [5.3]

1.2.2 Mid-hold definition

For the purpose of the FE analysis, the mid-hold is defined as the middle hold(s) of the three cargo hold length FE model.

In case of foremost and aftmost cargo hold assessment, the mid-hold represents the foremost and aftmost cargo hold including the slop tank if any, respectively.

1.2.3 Scantling assessment

The scantling assessment is carried out according to Ch 7, Sec 1 for each individual cargo hold using the FE load combinations defined in Ch 4, Sec 8 applicable to the considered cargo hold. The FE analysis results are applicable to the evaluation area as defined in [5.1.1], of the considered cargo hold.

The individual transverse bulkhead structural elements, inclusive plating, stiffeners and horizontal stringers, are to be assessed considering two cargo hold finite element analyses, i.e. the analysis for the hold forward and the one for the hold aft of the considered transverse bulkhead.

2 STRUCTURAL MODEL

2.1 Members to be modelled

2.1.1

All main longitudinal and transverse structural elements are to be modelled. These include:

- Inner and outer shell,
- Deck,
- Double bottom floors and girders,
- Transverse and vertical web frames,
- Hatch coamings,
- Stringers,
- Transverse and longitudinal bulkhead structures,
- Other primary supporting members,
- Other structural members which contribute to hull girder strength.

All plates and stiffeners on the structure, including web stiffeners, are to be modelled. Brackets which contribute to primary supporting member strength and the size of which is not less than the typical mesh size (s-by-s) described in [2.4.2], are to be modelled.

2.2 Extent of model

2.2.1 Longitudinal extent

Except the foremost and aftermost cargo hold models, the longitudinal extent of the cargo hold FE model is to cover three cargo hold lengths. The transverse bulkheads at the ends of the model are to be modelled. Where corrugated transverse bulkheads are fitted, the model is to include the extent of the bulkhead stool structure forward and aft of the tanks/holds at the model ends. The web frames at the ends of the model are to be modelled. Typical finite element models representing the midship cargo hold region of different ship type configurations are shown in Figure 3 and Figure 4.

The foremost and the aftmost cargo holds are located at the middle of the FE models as follows:

- Foremost cargo hold: from the after bulkhead of the cargo hold no. 2 to the ship's foremost cross section where the reinforced ring or web frame remains continuous from the base line to the strength deck.
- Aftermost cargo hold: from the after bulkhead of the engine room to the forward bulkhead of no. N-1 cargo hold, where N is the number of holds or sets of holds numbered from forward to aft.

Examples of finite element models representing the foremost and aftermost cargo holds of different ship type configurations are shown in Figure 5 and Figure 6.

2.2.2 Hull form modelling

In general, the finite element model is to represent the geometry of the hull form. In the midship cargo hold region, the finite element model may be prismatic provided the mid-hold has a prismatic shape.

In the foremost cargo hold model, the hull form forward of the transverse section at the middle of the fore part up to the model end as defined in [2.2.1] may be modelled with a simplified geometry. The transverse section at the middle of the fore part up to the model end may be extruded out to the fore model end, as shown in Figure 2.

In the aftmost cargo hold model, the hull form aft of the middle of the machinery space may be modelled with a simplified geometry. The section at the middle of the machinery space may be extruded out to its aft bulkhead, as shown in Figure 2.

When the hull form is modelled by extrusion, the geometrical properties of the transverse section located at the middle of the considered space (fore or machinery space) are copied along the simplified model. The transverse web frames are to be considered along this extruded part with the same properties as the ones in the fore part or in the machinery space.

Figure 2 : Hull form simplification for foremost and aftmost cargo hold model

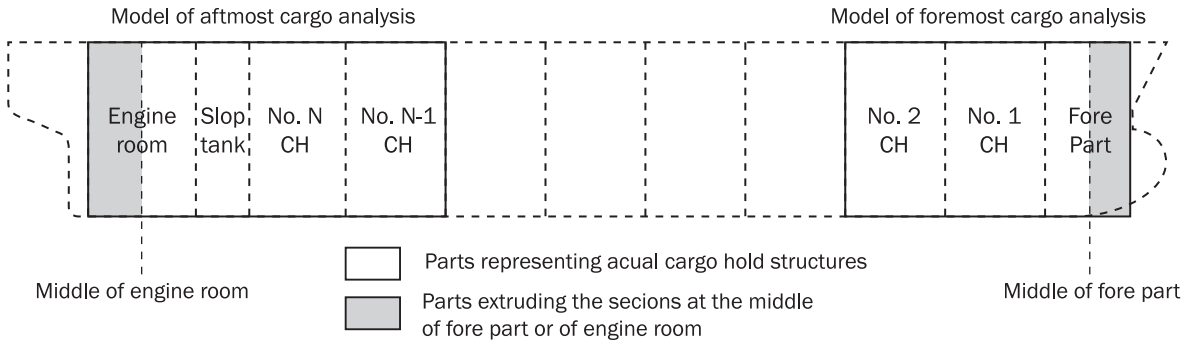

2.2.3 Transverse extent

Both port and starboard sides of the ship are to be modelled.

2.2.4 Vertical extent

The full depth of the ship is to be modelled including primary supporting members above the upper deck, trunks, forecastle and/or cargo hatch coaming, if any.

The superstructure or deck house in way of the machinery space and the bulwark are not required to be included in the model.

2.3 Finite element types

2.3.1

Shell elements are to be used to represent plates.

2.3.2

All stiffeners are to be modelled with beam elements having axial, torsional, bi-directional shear and bending stiffness. The eccentricity of the neutral axis is to be modelled.

2.3.3

Face plates of primary supporting members and brackets are to be modelled using rod or beam elements.

Figure 3 : Example of 3 cargo hold model within midship region of oil tankers

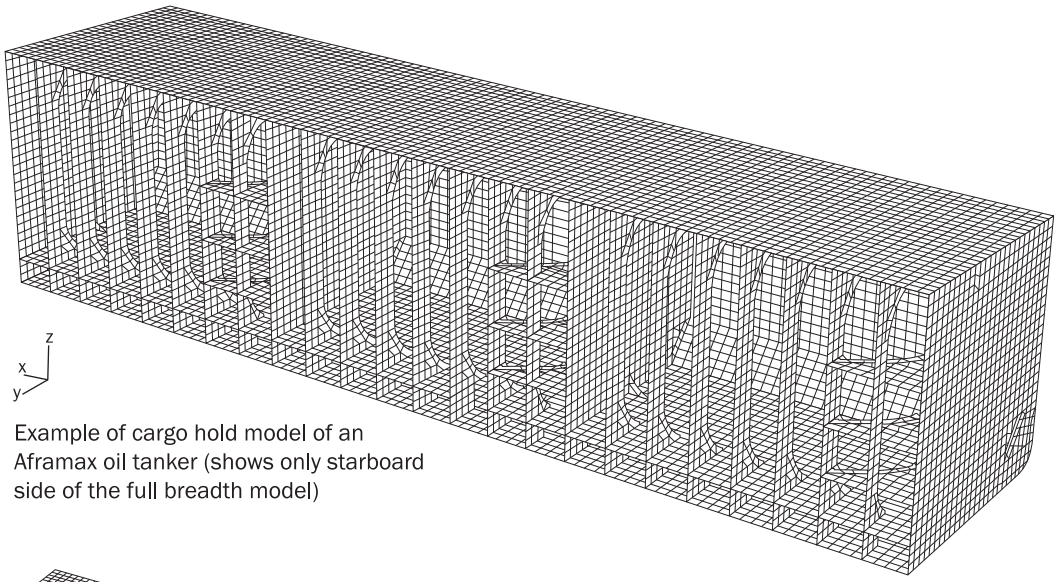

Example of cargo hold model of an Aframax oil tanker (shows only starboard side of the full breadth model)

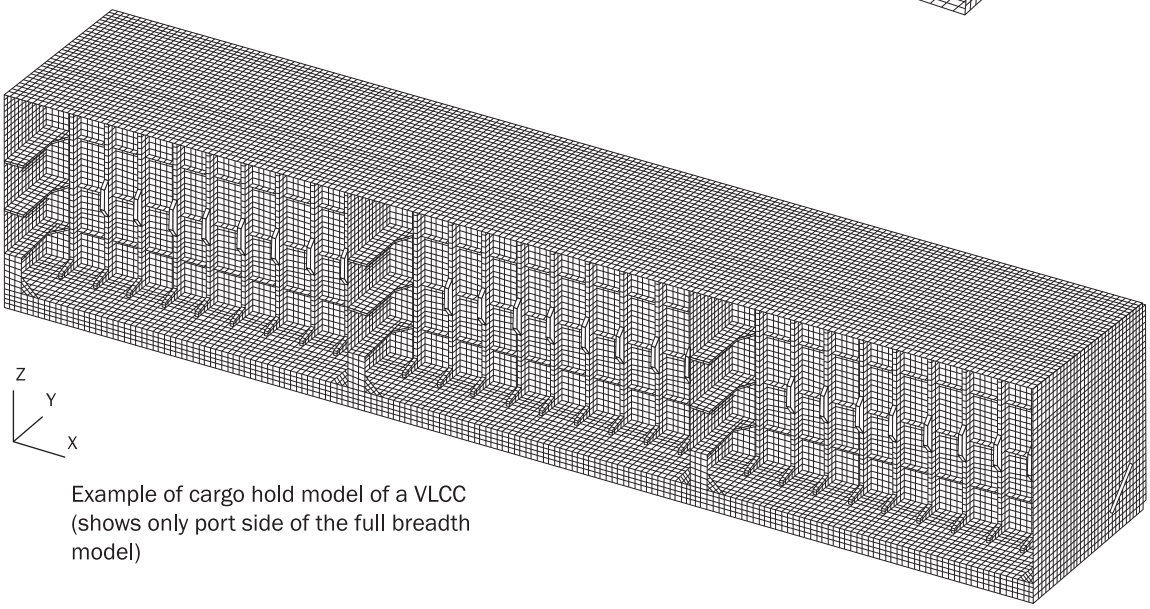

Example of cargo hold model of a VLCC (shows only port side of the full breadth model)

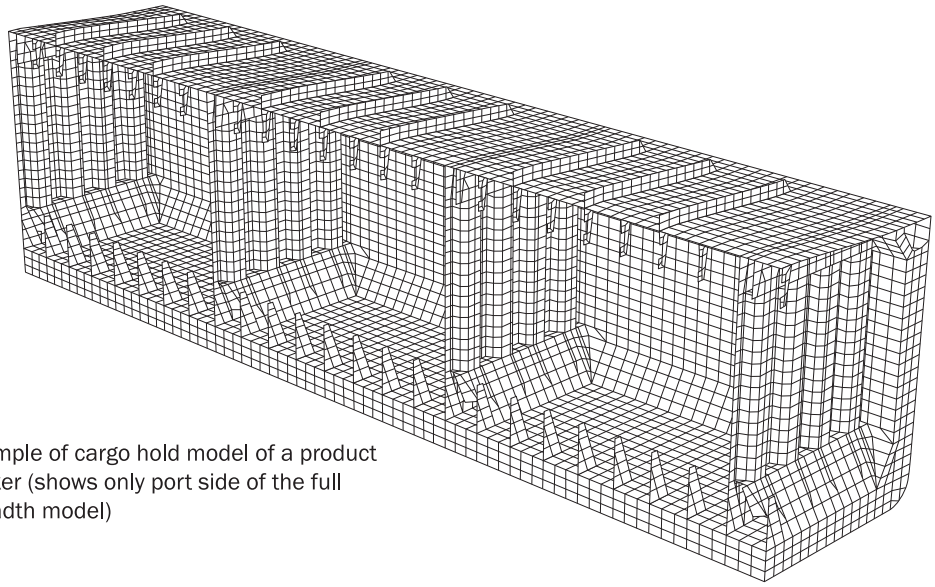

Example of cargo hold model of a product tanker (shows only port side of the full breadth model)

Figure 4 : Example of 3 cargo hold model within midship region of a bulk carrier

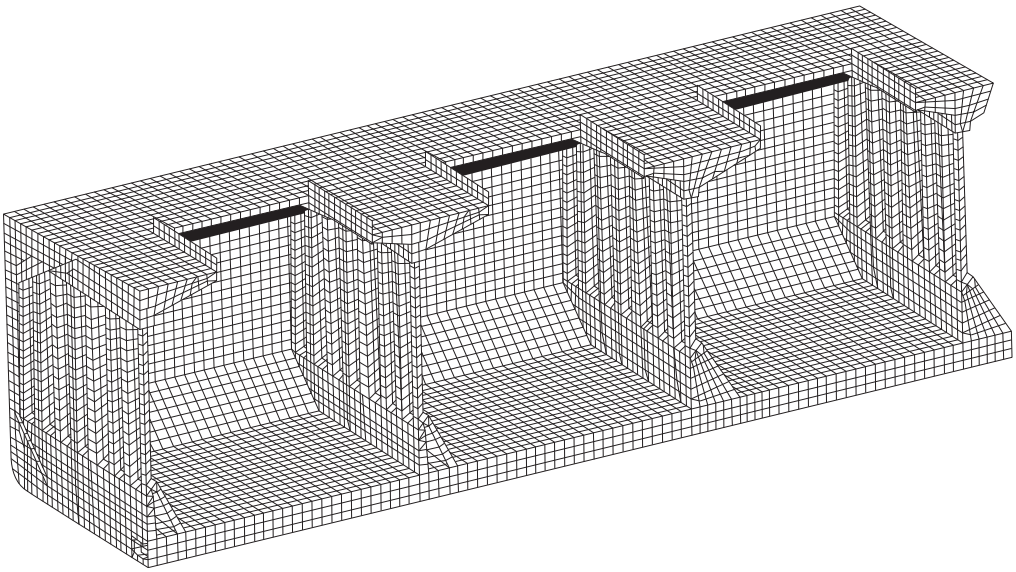

Example of cargo hold model of a bulk carrier (shows only port side of the full breadth model)

Figure 5 : Example of FE model for the foremost cargo hold structure of an oil tanker

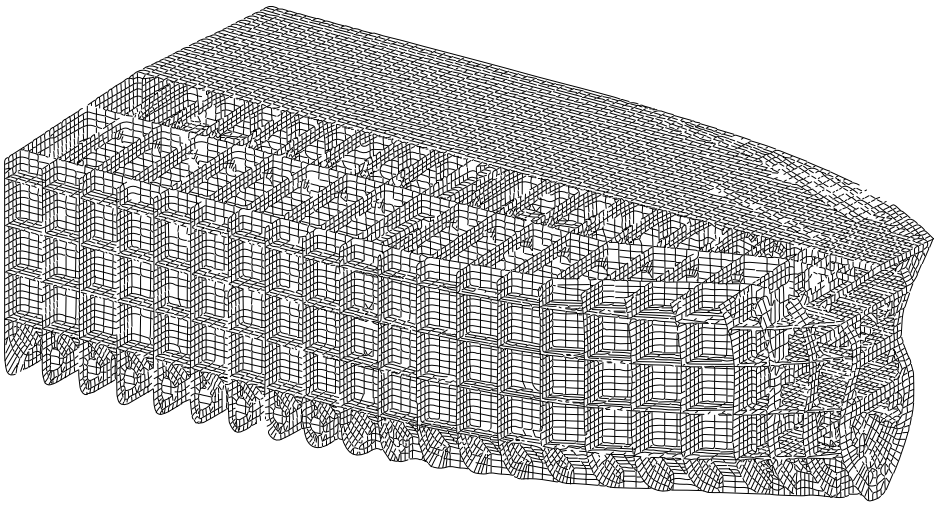

Figure 6 : Example of FE model for the aftermost cargo hold structure of a bulk carrier

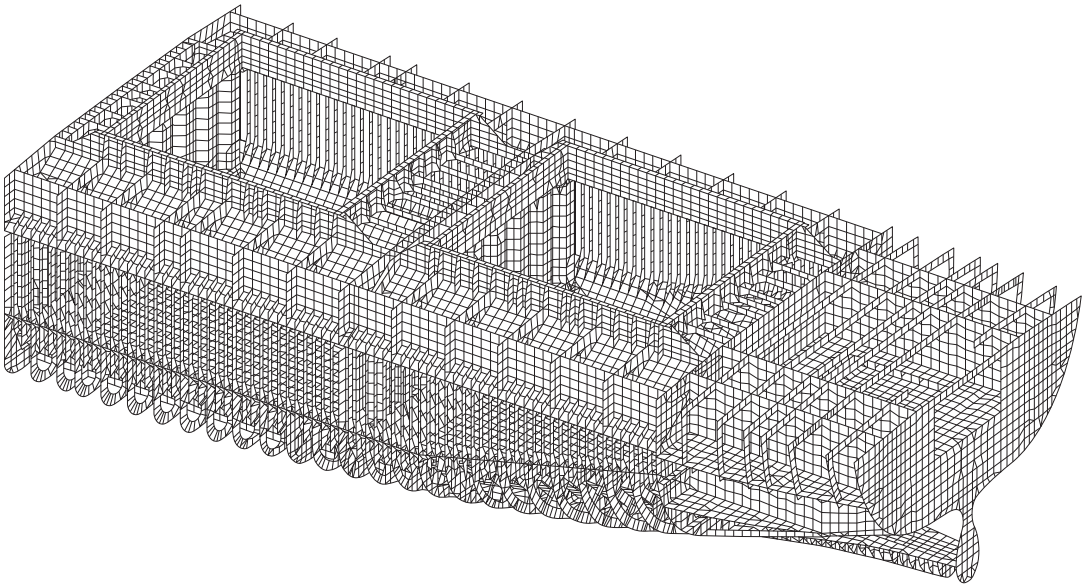

Figure 7 : Typical finite element mesh on web frame

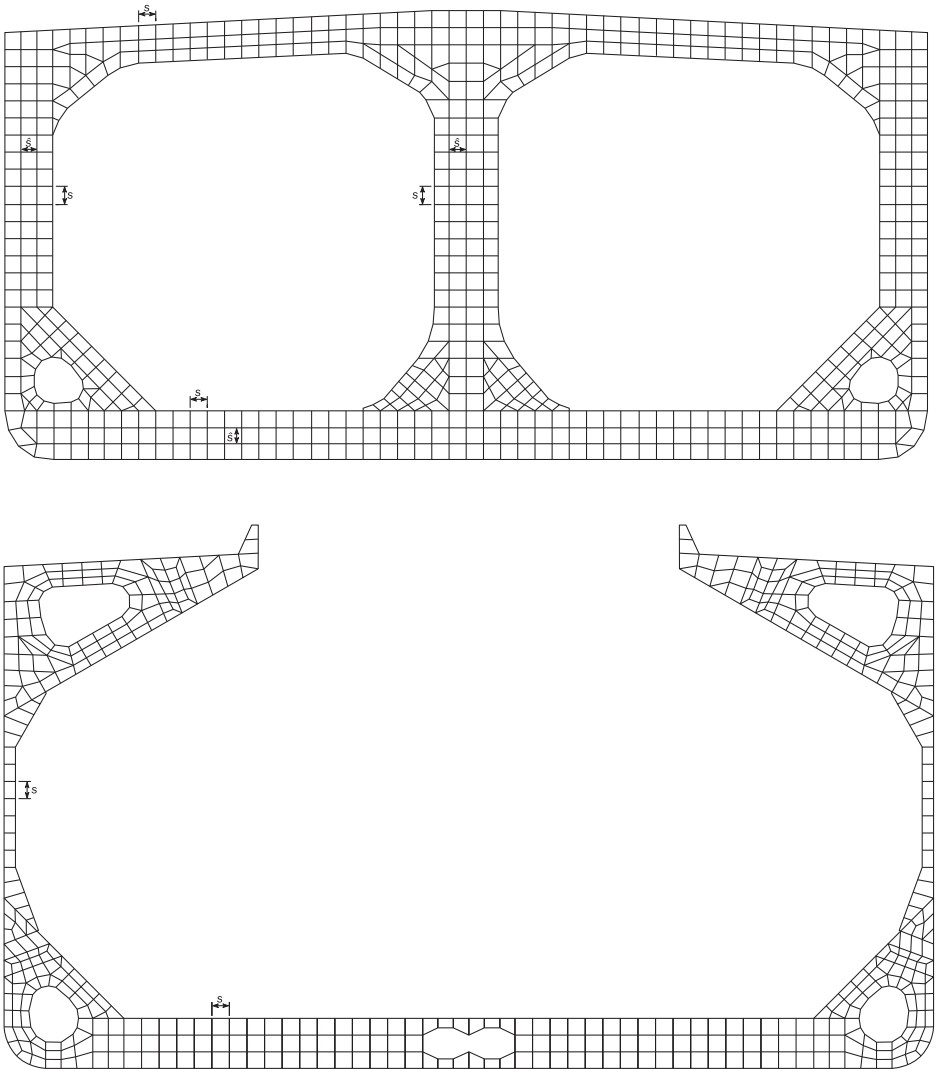

Figure 8 : Typical finite element mesh on transverse bulkhead

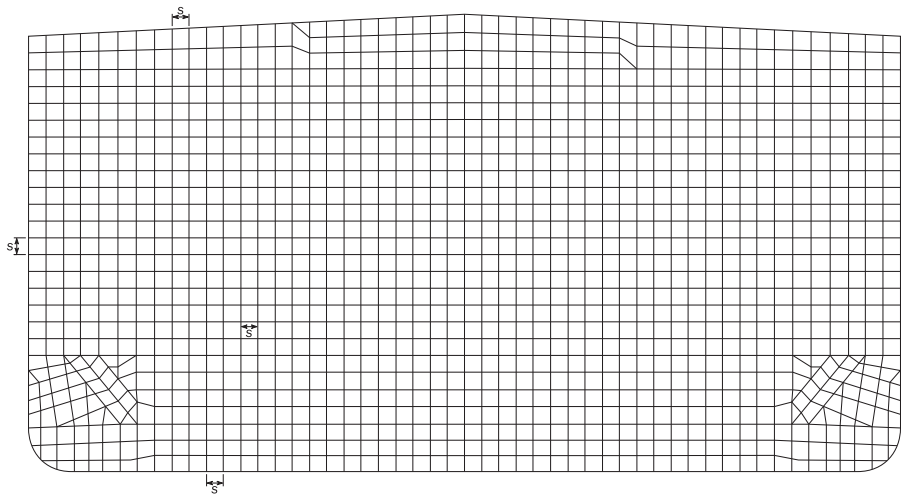

s = Stiffener spacing

2.4 Structural modelling

2.4.1 Aspect ratio

The aspect ratio of the shell elements is in general not to exceed 3. The use of triangular shell elements is to be kept to a minimum. Where possible, the aspect ratio of shell elements in areas where there are likely to be high stresses or a high stress gradient is to be kept close to 1 and the use of triangular elements is to be avoided.

2.4.2 Mesh

The shell element mesh is to follow the stiffening system as far as practicable, hence representing the actual plate panels between stiffeners. In general, the shell element mesh is to satisfy the following requirements:

a) One element between every longitudinal stiffener, see Figure 7. Longitudinally, the element length is not to be greater than 2 longitudinal spaces with a minimum of three elements between primary supporting members.

b) One element between every stiffener on transverse bulkheads, see Figure 8.

c) One element between every web stiffener on transverse and vertical web frames, cross ties and stringers, see Figure 7 and Figure 9.

d) At least 3 elements over the depth of double bottom girders, floors, transverse web frames, vertical web frames and horizontal stringers on transverse bulkheads. For cross ties, deck transverse and horizontal stringers on transverse wash bulkheads and longitudinal bulkheads with a smaller web depth, modelling using 2 elements over the depth is acceptable provided that there is at least 1 element between every web stiffener. For a single side bulk carrier, 1 element over the depth of side frames is acceptable. The mesh size of adjacent structure is to be adjusted accordingly.

e) The mesh on the hopper tank web frame and the topside web frame is to be fine enough to represent the shape of the web ring opening, as shown in Figure 7.

f) The curvature of the free edge on large brackets of primary supporting members is to be modelled to avoid unrealistic high stress due to geometry discontinuities. In general, a mesh size equal to the stiffener spacing is acceptable. The bracket toe may be terminated at the nearest nodal point provided that the modelled length of the bracket arm does not exceed the actual bracket arm length. The bracket flange is not to be connected to the plating, as shown in Figure 10. The modelling of the tapering part of the flange is to be in accordance with [2.4.8]. An example of acceptable mesh is shown in Figure 10. A finer mesh is to be used for the determination of detailed stress at the bracket toe, as given in Ch 7, Sec 3.

Figure 9 : Typical finite element mesh on horizontal transverse stringer on transverse bulkhead

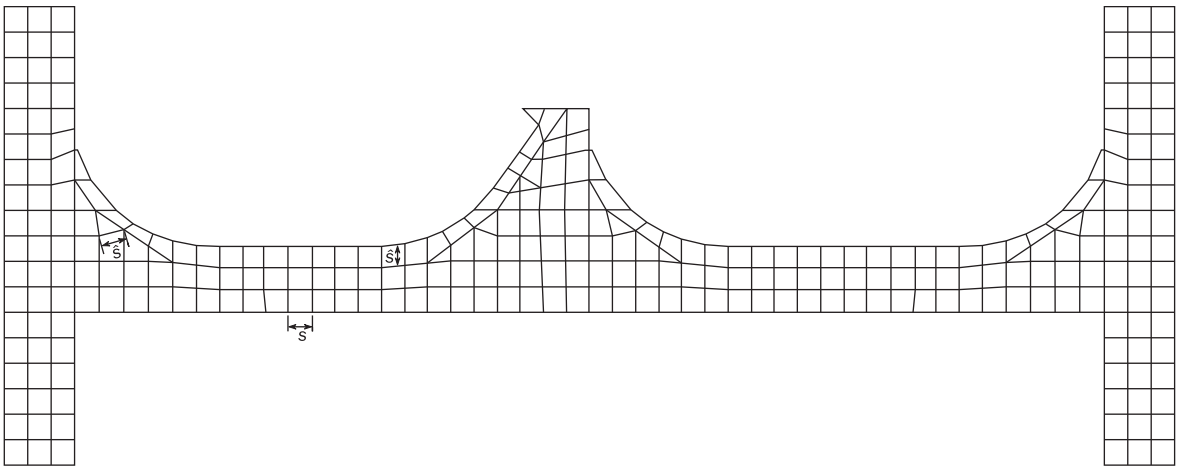

s = Stiffener spacing

Figure 10 : Typical finite element mesh on transverse web frame main bracket

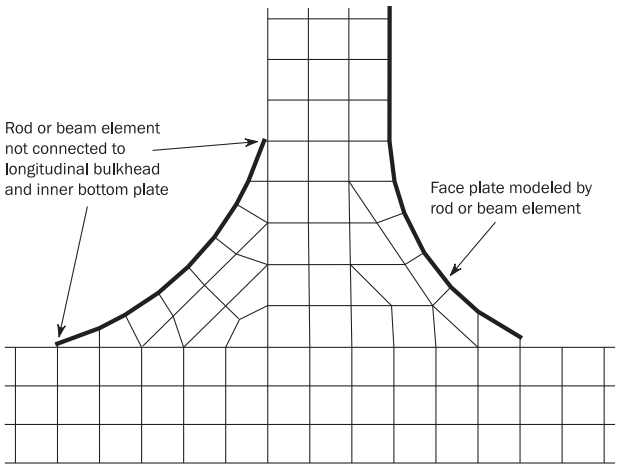

2.4.3 Finer mesh

Where the geometry cannot be adequately represented in the cargo hold model and the stress exceeds the cargo hold mesh acceptance criteria, a finer mesh may be used for such geometry to demonstrate satisfactory scantlings. The mesh size required for such analysis can be governed by the geometry. In such cases, the average stress within an area equivalent to that specified in [2.4] is to comply with the requirements given in [5.2].

2.4.4 Corrugated bulkhead

Diaphragms in the stools, supporting structure of corrugated bulkheads and internal longitudinal and vertical stiffeners on the stool plating are to be included in the model. Modelling is to be carried out as follows:

a) The corrugation is to be modelled with its geometric shape.

b) The mesh on the flange and web of the corrugation is in general to follow the stiffener spacing inside the bulkhead stool.

c) The mesh on the longitudinal corrugated bulkhead is to follow longitudinal positions of transverse web frames, where the corrections to hull girder vertical shear forces are applied in accordance with [4.4.7].

d) The aspect ratio of the mesh in the corrugation is not to exceed 2 with a minimum of 2 elements for the flange breadth and the web height.

e) Where difficulty occurs in matching the mesh on the corrugations directly with the mesh on the stool, it is acceptable to adjust the mesh on the stool in way of the corrugations.

f) For a corrugated bulkhead without an upper stool and/or lower stool, it may be necessary to adjust the geometry in the model. The adjustment is to be made such that the shape and position of the corrugations and primary supporting members are retained. Hence, the adjustment is to be made on stiffeners and plate seams if necessary.

g) When corrugated bulkhead is subjected to liquid cargo or ballast, dummy rod elements with a cross sectional area of 1 mm^2 are to be modelled at the corrugation knuckle between the flange and the web. Dummy rod elements are to be used as minimum at the two corrugation knuckles closest to the intersection between:

- Transverse and longitudinal bulkheads,
- Transverse bulkhead and inner hull,
- Transverse bulkhead and side shell.

h) Manholes in diaphragms are to be modelled according to [2.4.9].

2.4.5

Example of mesh arrangements of the cargo hold structure are shown in Figure 11 to Figure 14.

Figure 11 : Example of FE mesh arrangements of cargo hold structure for a bulk carrier

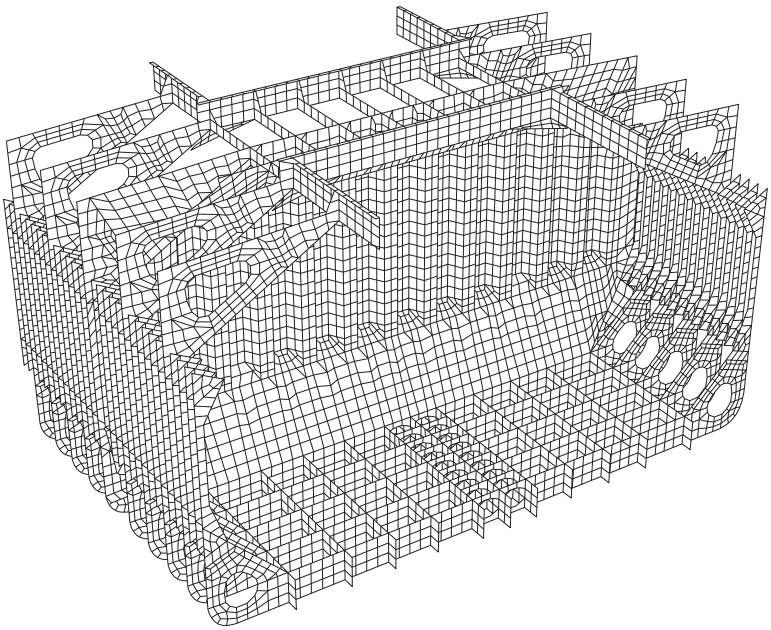

Figure 12 : Example of FE mesh on transverse corrugated bulkhead structure for a product tanker

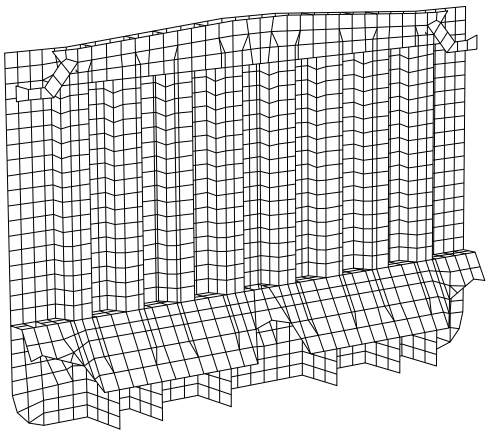

Figure 13 : Example of FE mesh arrangements of cargo tank structure for an aframax tanker

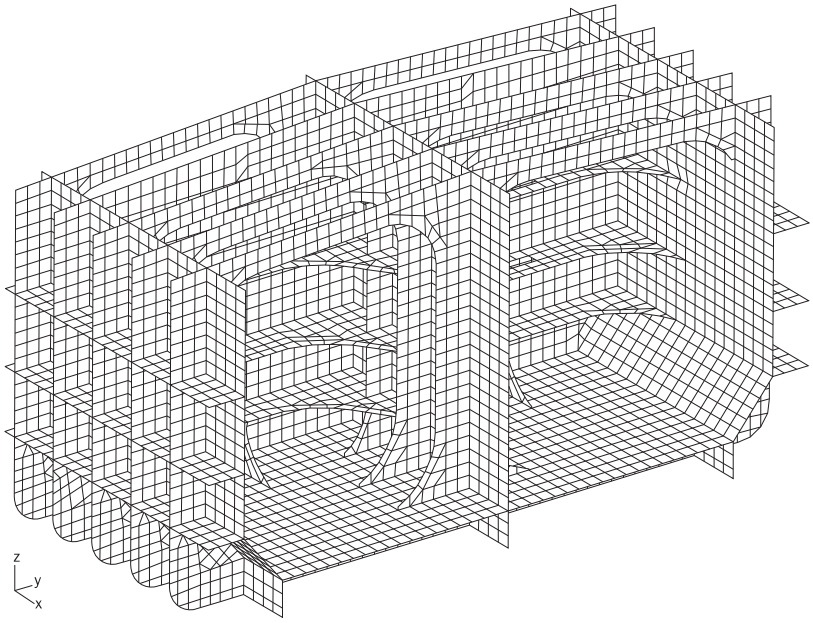

Figure 14 : Examples of FE mesh arrangements of cargo tank structure for VLCC and product tanker

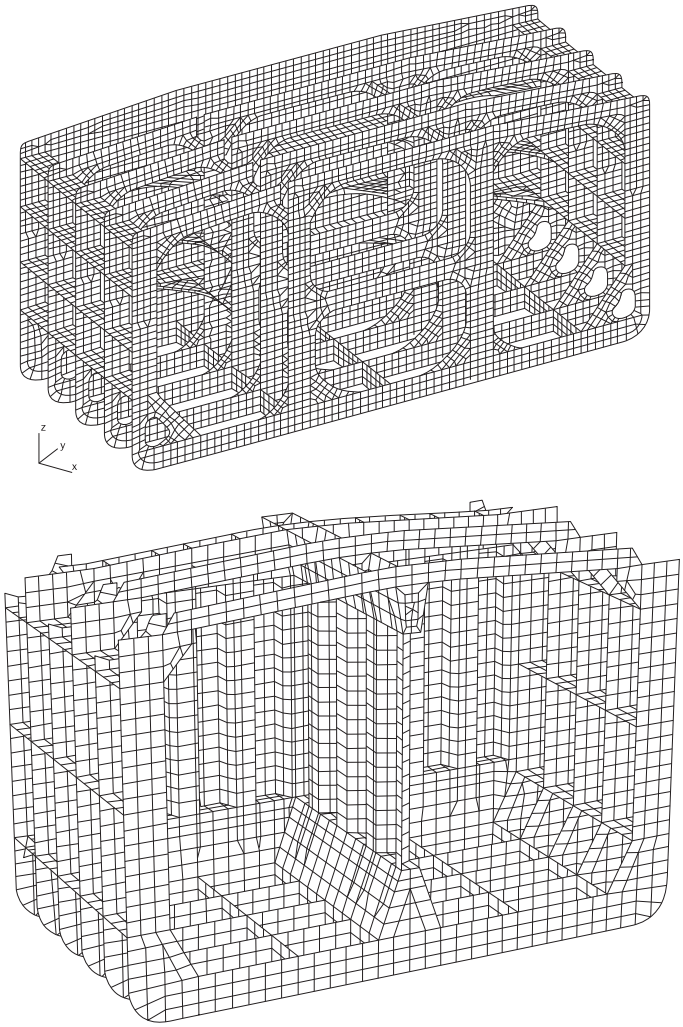

2.4.6 Sniped stiffener

Non continuous stiffeners are to be modelled as continuous stiffeners, i.e. the height web reduction in way of the snip ends are not to be modelled.

2.4.7 Web stiffeners of primary supporting members

Web stiffeners of primary supporting members are to be modelled. Where these stiffeners are not in line with the primary FE mesh, it is sufficient to place the line element along the nearby nodal points provided that the adjusted distance does not exceed 0.2 times the stiffener spacing under consideration. The stresses and buckling utilisation factors obtained need not be corrected for the adjustment. Buckling stiffeners on large brackets, deck transverses and stringers parallel to the flange are to be modelled. These stiffeners may be modelled using rod elements.

2.4.8 Face plate of primary supporting member

The effective cross sectional area at the curved part of the face plate of primary supporting members and brackets is to be calculated in accordance with Ch 3, Sec 7. The cross sectional area of a rod or beam element representing the tapering part of the face plate is to be based on the average cross sectional area of the face plate in way of the element length.

2.4.9 Openings

Methods of representing openings and manholes in webs of primary supporting members are to be in accordance with Table 1. Regardless of size, manholes are to be modelled by removing the appropriate elements.

Table 1 : Representation of openings in primary supporting member webs

Criteria	Modelling decision	Analysis
$h_o/h < 0.5$ and $g_o < 2.0$	Openings do not need to be modelled	To be evaluated by the screening procedure as given in Ch 7, Sec 3, [3.1.1]
Manholes	The geometry of the opening is to be modelled by removing the adequate elements	To be evaluated by the screening procedure as given in Ch 7, Sec 3, [3.1.1]
$h_o/h \geq 0.5$ or $g_o \geq 2.0$	The geometry of the opening is to be modelled	To be evaluated by fine mesh as given in Ch 7, Sec 3, [2.1.1]

where:

$$g_o = \left(1 + \frac{\ell_o^{\,2}}{2.6(h - h_o)^2}\right)$$

ℓ_o : Length of opening parallel to primary supporting member web direction, in m, see Figure 15. For sequential openings where the distance, d_o between openings is less than 0.25 h, the length ℓ_o is to be taken as the length across openings as shown in Figure 16.

ho : Height of opening parallel to depth of web, in m, see Figure 15 and Figure 16.

h : Height of web of primary supporting member in way of opening, in m, see Figure 15 and Figure 16.

Figure 15 : Openings in web

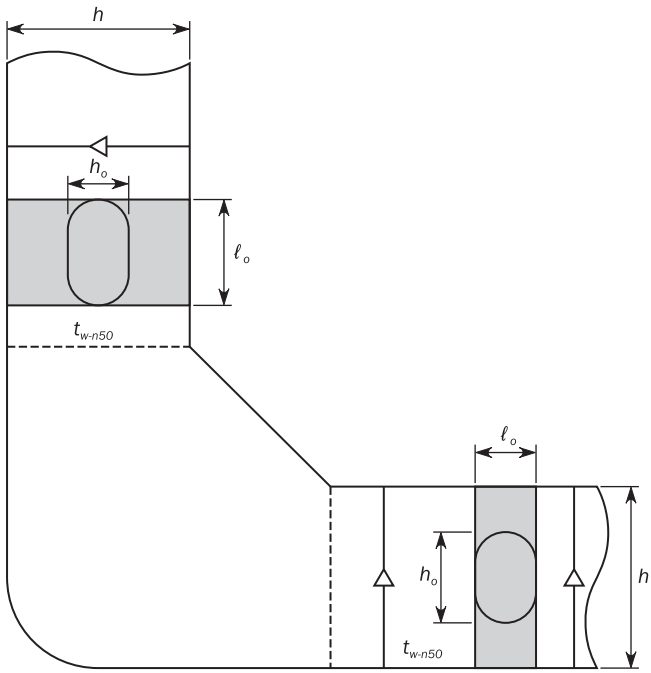

Figure 16 : Length lo for sequential openings with $d_o < h/4$

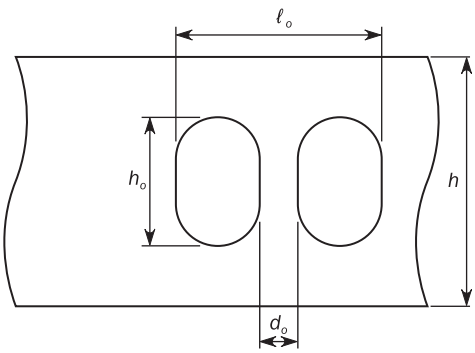

2.5 Boundary conditions

2.5.1 General

All boundary conditions described in this section are in accordance with the global coordinate system defined in Ch 4, Sec 1.

2.5.2 Application

The boundary conditions given [2.5.3] are applicable to cargo hold finite element model analyses in cargo hold region.

2.5.3 Boundary conditions

The boundary conditions consist of the rigid links at model ends, point constraints and end-beams. The rigid links connect the nodes on the longitudinal members at the model ends to an independent point at neutral axis in centreline. The boundary conditions to be applied at the ends of the cargo hold FE model, except for the foremost cargo hold, are given in Table 2. For the foremost cargo hold analysis, the boundary conditions to be applied at the ends of the cargo hold FE model are given in Table 3.

Table 2 : Boundary constraints at model ends except the foremost cargo hold models

Location	Translation			Rotation		
	δ_x	δ_y	δ_z	θ_x	θ_y	θ_z
Aft End						
Independent point	-	Fix	Fix	$M_{T\text{-}end}$	-	-
Cross section	-	Rigid link	Rigid link	Rigid link	-	-
	End beam, see [2.5.4]					
Fore End						
Independent point	-	Fix	Fix	Fix	-	-
Intersection of centreline and inner bottom	Fix	-	-	-	-	-
Cross section	-	Rigid link	Rigid link	Rigid link	-	-
	End beam, see [2.5.4]					

Note 1: [-] means no constraint applied (free).
Note 2: See Figure 17.

Table 3 : Boundary constraints at model ends of the foremost cargo hold model

Location	Translation			Rotation		
	δ_x	δ_y	δ_z	θ_x	θ_y	θ_z
Aft End						
Independent point	-	Fix	Fix	Fix	-	-
Intersection of centreline and inner bottom	Fix	-	-	-	-	-
Cross section	-	Rigid link	Rigid link	Rigid link	-	-
	End beam, see [2.5.4]					
Fore End						
Independent point	-	Fix	Fix	$M_{T\text{-}end}$	-	-
Cross section	-	Rigid link	Rigid link	Rigid link	-	-

Note 1: [-] means no constraint applied (free).
Note 2: See Figure 17.
Note 3: Boundary constraints in fore end are to be located at the most forward reinforced ring or web frame which remains continuous from the base line to the strength deck.

Figure 17 : Boundary conditions applied at the model end sections

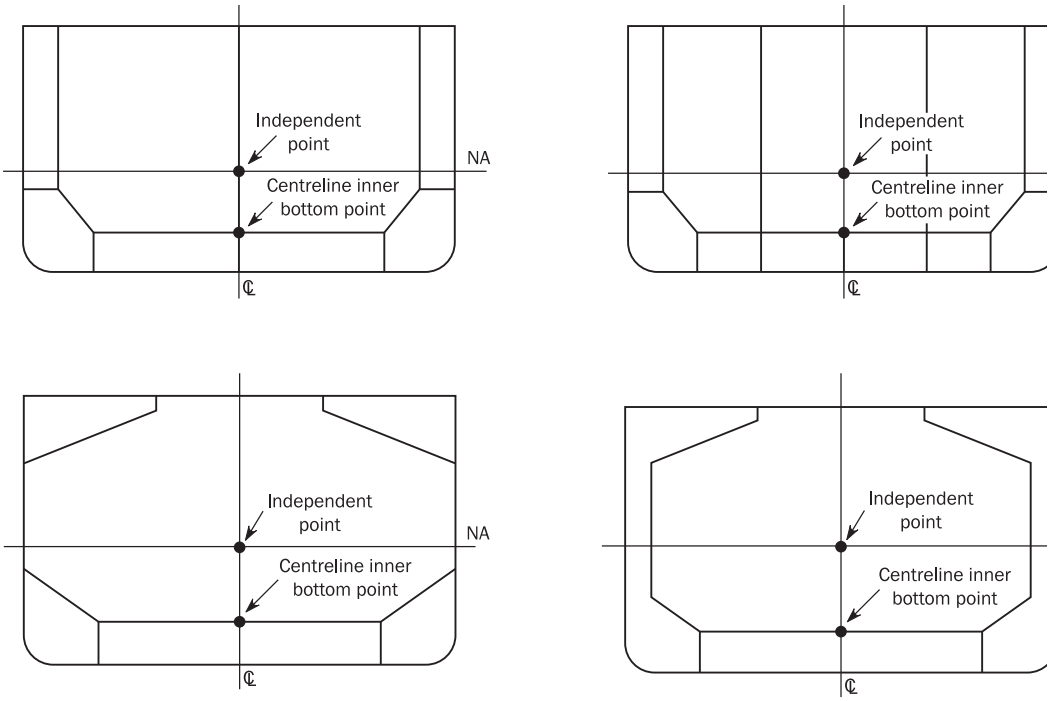

2.5.4 End constraint beams

End constraint beams are to be modelled at the both end sections of the model along all longitudinally continuous structural members and along the cross deck plating of bulk carriers. An example of end beams at one end for a double hull bulk carrier is shown in Figure 18.

Figure 18 : End constraint beams for a bulk carrier

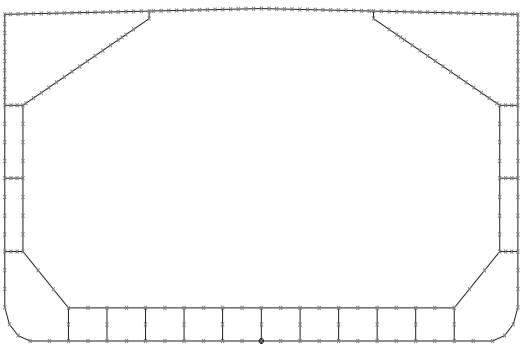

The properties of beams are calculated at fore and after sections separately and all beams at each end section have identical properties as follows:

- Net moment of inertia: $I_{yy\text{-}n50} = I_{zz\text{-}n50} = I_{xx\text{-}n50}$ (J) = 1/25 of the vertical hull girder moment of inertia of fore/aft end cross sections based on the net FE model.
- Net cross sectional area: $A_{y\text{-}n50}$ and $A_{z\text{-}n50}$ = 1/80 of the fore/aft end cross sectional areas based on the net FE model.

where:

$I_{yy\text{-}n50}$: Moment of inertia about local beam Y axial, in m^4.

$I_{zz\text{-}n50}$: Moment of inertia about local beam Z axial, in m^4.

$I_{xx\text{-}n50}$ (J) : Torsional inertia, in m^4.

$A_{y\text{-}n50}$: Shear area in local beam Y direction, in m^2.

$A_{z\text{-}n50}$: Shear area in local beam Z direction, in m^2.

3 FE LOAD COMBINATIONS

3.1 Design Load combinations

3.1.1 FE load combination definition

A FE load combination is defined as a loading pattern, a draught, a value of still water bending and shear force, associated with a given dynamic load case.

3.1.2 Mandatory load combinations

For cargo hold structural strength analysis, the design load combinations specified in Ch 4, Sec 8 are to be used for considered ship type and considered cargo hold regions.

Each design load combination given in Ch 4, Sec 8 consists of a loading pattern and dynamic load cases as given in Ch 4, Sec 2. Each load combination requires the application of the structural weight, internal and external pressures and hull girder loads. For seagoing condition, both static and dynamic load components (S+D) are applied. For harbour and tank testing condition, only static load components (S) are applied.

3.1.3 Additional loading conditions

Where the loading conditions specified by the designer are not covered by the load combinations given in Ch 4, Sec 8, these additional loading conditions are to be examined according to the procedure in [4].

4 LOAD APPLICATION

4.1 General

4.1.1 Structural weight

Effect of the weight of hull structure is to be included in static loads, but is not to be included in dynamic loads. Density of steel is to be taken as given in Ch 4, Sec 6.

4.1.2 Sign convention

Unless otherwise mentioned in this Section, the sign of moments and shear force is to be in accordance with the sign convention defined in Ch 4, Sec 1.

4.2 External and internal loads

4.2.1 External pressure

External pressure is to be calculated for each load case in accordance with Ch 4, Sec 5. External pressures include static sea pressure, wave pressure and green sea pressure.

The forces applied on the hatch cover by the green sea pressure are to be distributed along the top of the corresponding hatch coamings. The total force acting on the hatch cover is determined by integrating the hatch cover green sea pressure as defined in Ch 4, Sec 5, [5]. Then the total force is to be distributed to the total length of the hatch coamings using the average line load. The effect of the hatch cover self weight is to be ignored in the loads applied to the ship structure.

4.2.2 Internal pressure

Internal pressure is to be calculated for each load case in accordance with Ch 4, Sec 6 for design load scenarios given in Ch 4, Sec 7, Table 1. Internal pressures include static dry and liquid cargo, ballast and other liquid pressure, setting pressure on relief valve and dynamic pressure of dry and liquid cargo, ballast and other liquid pressure due to acceleration.

4.2.3 Pressure application on FE element

Constant pressure, calculated at the element's centroid, is applied to the shell element of the loaded surfaces, e.g. outer shell and deck for external pressure and tank/hold boundaries for internal pressure. Alternately, pressure can be calculated at element nodes applying linear pressure distribution within elements.

4.3 Hull girder loads

4.3.1 General

Each loading condition is to be associated with its corresponding hull girder loads which is to be applied to the model according to the procedure described in [4.4] for shear force and bending moment and in [4.5] for torsional moment. The hull girder loads are the combinations of still water hull girder loads and wave induced hull girder loads as specified in Ch 4, Sec 8. For each required FE load combination, the wave induced hull girder loads are to be calculated with the Load Combination Factors (LCFs), specified in Ch 4, Sec 2.

4.3.2 Target hull girder vertical bending moment

The target hull girder vertical bending moment, $M_{v\text{-}targ}$, in kNm, at a longitudinal position for a given FE load

combination is taken as:

$$M_{v-targ} = C_{BM-LC}\, M_{sw} + M_{wv-LC}$$

where:

$C_{BM\text{-}LC}$: Percentage of permissible still water bending moment applied for the load combination under consideration as given in Ch 4, Sec 8,

M_{sw} : Permissible still water bending moments in kNm, at the considered longitudinal position for seagoing and harbour conditions as defined in Ch 4, Sec 4, [2.2.2] and Ch 4, Sec 4, [2.2.3] respectively.

$M_{wv\text{-}LC}$: Vertical wave bending moment in kNm, for the dynamic load case under consideration, calculated in accordance with Ch 4, Sec 4, [3.5.2].

The values of $M_{v\text{-}targ}$ are taken as:

- Midship cargo hold region: the maximum hull girder bending moment within the mid-hold(s) for each individual cargo hold for each given FE load combination as defined in Ch 4, Sec 8.
- Outside midship cargo hold region: the values at all web frame and transverse bulkhead positions of the FE model under consideration.

Both $C_{BM\text{-}LC}\, M_{sw}$ *and* $M_{wv\text{-}LC}$ are either in sagging or in hogging condition according to the FE load combinations given in the tables of Ch 4, Sec 8.

4.3.3 Target hull girder shear force

The target hull girder vertical shear force at the aft and forward transverse bulkheads of the mid-hold, $Q_{targ\text{-}aft}$ and $Q_{targ\text{-}fwd}$, in kN, for a given FE load combination is taken as:

- $Q_{fwd} \geq Q_{aft}$:

$$Q_{targ-aft} = C_{SF-LC} \cdot Q_{sw-neg} - \Delta Q_{swa} + f_{\beta} |C_{QW}| Q_{wv-neg}$$

$$Q_{targ-fwd} = C_{SF-LC} \cdot Q_{sw-pos} + \Delta Q_{swf} + f_{\beta} |C_{QW}| Q_{wv-pos}$$

- $Q_{fwd} < Q_{aft}$:

$$Q_{targ-aft} = C_{SF-LC} \cdot Q_{sw-pos} + \Delta Q_{swa} + f_{\beta} |C_{QW}| Q_{wv-pos}$$

$$Q_{targ-fwd} = C_{SF-LC} \cdot Q_{sw-neg} - \Delta Q_{swf} + f_{\beta} |C_{QW}| Q_{wv-neg}$$

where:

Q_{fwd}, Q_{aft}: Vertical shear forces, in kN, due to the local loads respectively at the forward and aft bulkhead position of the mid-hold, as defined in [4.4.6].

$C_{SF\text{-}LC}$: Percentage of permissible still water shear force as given in Ch 4, Sec 8, for the FE load combination under consideration.

$Q_{sw\text{-}pos}$, $Q_{sw\text{-}neg}$: Positive and negative permissible still water shear forces, in kN, at any longitudinal position for seagoing and harbour conditions as defined in Ch 4, Sec 4, [2.3.3] and Ch 4, Sec 4, [2.3.4] respectively.

ΔQ_{swf} : Shear force correction, in kN, for the considered FE loading pattern at the forward bulkhead taken as:

- For bulk carriers:

  Minimum of the absolute values of ΔQ_{mdf} as defined in Ch 5, Sec 1, [3.6.1] calculated at forward bulkhead for the mid-hold and the value calculated at aft bulkhead of the forward cargo hold taken as:

  $$\Delta Q_{swf} = Min(|\Delta Q_{mdf}|_{Mid}, |\Delta Q_{mdf}|_{Fwd})$$

- For oil tankers:

  $$\Delta Q_{swf} = 0$$

ΔQ_{swa} : Shear force correction, in kN, for the considered FE loading pattern at the aft bulkhead taken as:

- For bulk carriers:

  Minimum of the absolute values of ΔQ_{mdf} as defined in Ch 5, Sec 1, [3.6.1] calculated at aft bulkhead for the mid-hold and the value calculated at forward bulkhead of the aft cargo hold taken as:

  $$\Delta Q_{swa} = Min(|\Delta Q_{mdf}|_{Mid}, |\Delta Q_{mdf}|_{Aft})$$

- For oil tankers:

  $$\Delta Q_{swa} = 0$$

f_{β} : Wave heading factor, as given in Ch 4, Sec 4.

C_{QW} : Load combination factor for vertical wave shear force, as given in Ch 4, Sec 2.

$Q_{wv\text{-}pos}$, Q_{wv_neg}: Positive and negative vertical wave shear force, in kN, as defined in Ch 4, Sec 4, [3.2.1].

The values of $Q_{targ\text{-}aft}$ and $Q_{targ\text{-}fwd}$ are to be taken at after and forward transverse bulkheads of the mid-hold under consideration.

4.3.4 Target hull girder horizontal bending moment

The target hull girder horizontal bending moment, $M_{h\text{-}targ}$, in kNm, for a given FE load combination is taken as:

$$M_{h-targ} = M_{wh-LC}$$

where:

$M_{wh\text{-}LC}$: Horizontal wave bending moment, in kNm, for the dynamic load case under consideration, calculated in accordance with Ch 4, Sec 4, [3.5.4].

The values of $M_{wh\text{-}LC}$ are taken as:

- Midship cargo hold region: the value calculated for the middle of the individual cargo hold under consideration.
- Outside midship cargo hold region: the values calculated at all web frame and transverse bulkhead positions of the FE model under consideration.

4.3.5 Target hull girder torsional moment

For bulk carriers only, the target hull girder torsional moment, $M_{wt\text{-}targ}$, in kNm, for the dynamic load cases OST and OSA is the value at the target location taken as:

$$M_{wt-targ} = M_{wt-LC}\ (x_{targ})$$

where:

$M_{wt\text{-}LC}\ (x)$: Wave torsional moment, in kNm, for the dynamic load case OST and OSA, defined in Ch 4, Sec 4, [3.5.5], calculated at x position.

x_{targ} : Target location for hull girder torsional moment taken as:

- For midship cargo hold region:
  - If $x_{mid} \leq 0.531\ L$: after bulkhead of the mid-hold.
  - If $x_{mid} > 0.531\ L$: forward bulkhead of the mid-hold.
- Outside midship cargo hold region:

  The transverse bulkhead of mid-hold where the following formula is minimum:

$$\frac{M_{wt-LC}(x_{bhd})}{|M_{wt-LC}(x_{bhd})|} \cdot [M_{wt-LC}(x_{bhd}) - M_{T-FEM}(x_{bhd})]$$

x_{mid} : X-coordinate, in m, of the mid-hold centre.

x_{bhd} : X-coordinate, in m, of the after or forward transverse bulkhead of mid-hold.

For dynamic load cases of bulk carriers other than OST and OSA and for all dynamic load cases of oil tankers, hull girder torsional moment $M_{wt\text{-}targ}$, at middle of mid-hold is to be adjusted to zero.

4.4 Procedure to adjust hull girder shear forces and bending moments

4.4.1 General

The procedure given in this sub-article [4.4] describes how to adjust the hull girder horizontal bending moment, vertical force and vertical bending moment distribution on the three cargo hold FE model to achieve the required target values at required locations. The hull girder load target values are specified in [4.3].

The target locations for hull girder shear force are at the transverse bulkheads of the mid-hold. The final adjusted hull girder shear force at the target location should not exceed the target hull girder shear force.

The target location for hull girder bending moment is, in general, located at the centre of the mid-hold. If the maximum value of bending moment is not located at the centre of the mid-hold, the final adjusted maximum bending moment within the mid-hold is not to exceed the target hull girder bending moment.

4.4.2 Local load distribution

The following local loads are to be applied for the calculation of hull girder shear and bending moments:

a) Ship structural steel weight distribution over the length of the cargo hold model (static loads). The structural steel weight is to be calculated based on the FE model with a net thickness of 0.5 t_c deduction, as used in the cargo hold FE model.

b) Weight of cargo and ballast (static loads).

c) Static sea pressure, dynamic wave pressure and, where applicable, green sea load. For the harbour/tank testing load cases, only static sea pressure needs to be applied.

d) Dynamic cargo and ballast loads for seagoing load cases.

With the above local loads applied to the FE model, the FE nodal forces are obtained through FE loading procedure. The 3D nodal forces will then be lumped to each longitudinal station to generate the one dimension local load distribution. The longitudinal stations are located at transverse bulkheads/frames and typical longitudinal FE model nodal locations in between the frames according to the cargo hold model mesh size requirement. Any intermediate nodes created for modelling structural details are not treated as the

longitudinal stations for the purpose of local load distribution. The nodal forces within half of forward and half of afterward of longitudinal station spacing are lumped to that station. The lumping process will be done for vertical and horizontal nodal forces separately to obtain the lumped vertical and horizontal local loads, f_{vi} and f_{hi}, at the longitudinal station i.

4.4.3 Hull girder forces and bending moment due to local loads

With the local load distribution, the hull girder load longitudinal distributions are obtained by assuming the model is simply supported at model ends. The reaction forces at both ends of the model and longitudinal distributions of hull girder shear forces and bending moments induced by local loads at any longitudinal station are determined by the following formulae:

$$R_{V_fore} = -\frac{\sum_i (x_i - x_{aft})\ f_{vi}}{x_{fore} - x_{aft}} \qquad R_{V_aft} = \sum_i f_{vi} + R_{V_fore}$$

$$R_{H_fore} = \frac{\sum_i (x_i - x_{aft})\ f_{hi}}{x_{fore} - x_{aft}} \qquad R_{H_aft} = -\sum_i f_{hi} + R_{H_fore}$$

$$F_l = \sum_i f_{li}$$

$$Q_{V_FEM}\ (x_j) = R_{V_aft} - \sum_i f_{vi} \qquad \text{when} \quad x_i < x_j$$

$$Q_{H_FEM}\ (x_j) = R_{H_aft} + \sum_i f_{hi} \qquad \text{when} \quad x_i < x_j$$

$$M_{V_FEM}\ (x_j) = (x_j - x_{aft})\ R_{V_aft} - \sum_i (x_j - x_i)\ f_{vi} \qquad \text{when} \quad x_i < x_j$$

$$M_{H_FEM}\ (x_j) = (x_j - x_{aft})\ R_{H_aft} + \sum_i (x_j - x_i)\ f_{hi} \qquad \text{when} \quad x_i < x_j$$

where:

R_{V_aft}, R_{V_fore}, R_{H_aft}, R_{H_fore} : Vertical and horizontal reaction forces at the aft and fore ends, in kN.

x_{aft} : X-coordinate of the aft end support, in m.

x_{fore} : X-coordinate of the fore end support, in m.

f_{vi} : Lumped vertical local load at longitudinal station i as defined in [4.4.2], in kN.

f_{hi} : Lumped horizontal local load at longitudinal station i as defined in [4.4.2], in kN.

F_l : Total net longitudinal force of the model, in kN.

f_{li} : Lumped longitudinal local load at longitudinal station i as defined in [4.4.2], in kN.

x_j : X-coordinate, in m, of considered longitudinal station j.

x_i : X-coordinate, in m, of longitudinal station i.

$Q_{V_FEM}\ (x_j)$, $Q_{H_FEM}\ (x_j)$, $M_{V_FEM}\ (x_j)$, $M_{H_FEM}\ (x_j)$: Vertical and horizontal shear forces, in kN, and bending moments, in kNm, at longitudinal station x_j created by the local loads applied on the FE model. The sign convention for reaction forces is that a positive creates a positive shear force.

4.4.4 Longitudinal unbalanced force

In case total net longitudinal force of the model, F_l, is not equal to zero, the counter longitudinal force, $(F_x)_j$, is to be applied at one end of the model, where the translation on X-direction, δ_x, is fixed, by distributing longitudinal axial nodal forces to all hull girder bending effective longitudinal elements, as follows:

$$(F_x)_j = \frac{F_l}{A_{x-n50}} \frac{A_{j-n50}}{n_j}$$

where:

$(F_x)_j$: Axial force applied to a node of the j-th element, in kN.

F_l : Total net longitudinal force of the model, as defined in [4.4.3], in kN.

A_{j-n50} : Net cross sectional area of the j-th element, in m^2.

A_{x-n50} : Net cross sectional area of fore end section, in m^2,

$$A_{x-n50} = \sum_j A_{j-n50}$$

n_j : Number of nodal points of j-th element on the cross section, n_j = 1 for beam element, n_j = 2 for 4-node shell element.

4.4.5 Hull girder shear force adjustment procedure

The hull girder shear force adjustment procedure defined in this requirement applies to all FE load combinations given in Ch 4, Sec 8. The FE load combinations not directly covered by the load combination tables of Ch 4, Sec 8 are to be considered on a case by case basis.

The two following methods are to be used for the shear force adjustment:

- Method 1 (M1): for shear force adjustment at one bulkhead of the mid-hold as given in [4.4.6],
- Method 2 (M2): for shear force adjustment at both bulkheads of the mid-hold as given in [4.4.7].

For the considered FE load combination, the method to be applied is to be selected as follows:

- For maximum shear force load combination (Max SFLC), the method 1 applies at the bulkhead mentioned in Table 4 if the shear force after the adjustment with method 1 at the other bulkhead does not exceed the target value. Otherwise, the method 2 applies.
- For other shear force load combination:
  - The shear force adjustment is not requested when the shear forces at both bulkheads are lower or equal to the target values. This applies to cargo hold analysis in whole cargo area except for aft most and foremost cargo hold.

    For aft most and foremost cargo hold analyses, the shear force adjustment is to be applied with method 1. The target hull girder vertical shear force at the aft and forward transverse bulkheads, $Q_{targ\text{-}aft}$ and $Q_{targ\text{-}fwd}$, are to be set to values of vertical shear force due to local loads Q_{aft} and Q_{fwd} accordingly:

    $Q_{targ-fwd} = Q_{fwd}$

    $Q_{targ-aft} = Q_{aft}$
  - The method 1 applies when the shear force exceeds the target at one bulkhead and the shear force at the other bulkhead after the adjustment with method 1 does not exceed the target value. Otherwise the method 2 applies,
  - The method 2 applies when the shear forces at both bulkheads exceed the target values,

The “maximum shear force load combinations” are marked as “Max SFLC” in the load combination tables of Ch 4, Sec 8. The “other shear force load combinations” are those which are not the maximum shear force load combinations. They are not marked in the load combination tables of Ch 4, Sec 8.

Table 4 : Mid-hold bulkhead location for shear force adjustment

Design loading conditions	Bulkhead location	$M_{wv\text{-}LC}$	Condition on Q_{fwd}	Mid-hold bulkhead for SF adjustment
Seagoing conditions	$x_{b\text{-}aft} > 0.5\,L$	< 0 (sagging)	$Q_{fwd} > Q_{aft}$	Fwd
			$Q_{fwd} \le Q_{aft}$	Aft
		> 0 (hogging)	$Q_{fwd} > Q_{aft}$	Aft
			$Q_{fwd} \le Q_{aft}$	Fwd
	$x_{b\text{-}fwd} < 0.5\,L$	< 0 (sagging)	$Q_{fwd} > Q_{aft}$	Aft
			$Q_{fwd} \le Q_{aft}$	Fwd
		> 0 (hogging)	$Q_{fwd} > Q_{aft}$	Fwd
			$Q_{fwd} \le Q_{aft}$	Aft
	$x_{b\text{-}aft} \le 0.5\,L$ and $x_{b\text{-}fwd} \ge 0.5\,L$	-	-	(1)
Harbour and testing conditions	whatever the location	-	-	(1)

(1) For the FE load combinations covered by the load combination tables of Ch 4, Sec 8, the bulkhead where the shear force adjustment is to be done is indicated in those tables.

Table 5 : Vertical shear force adjustment by application of vertical bending moments M_{Y_aft} and M_{Y_fore} for method 1

Vertical shear force diagram	Target position in mid-hold
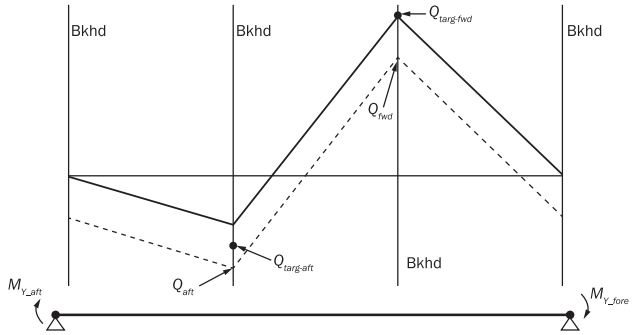	Forward bulkhead
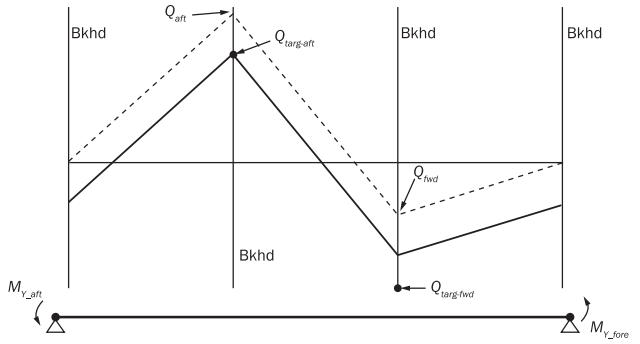	Aft bulkhead
Vertical shear force after adjustment - - - - - - - - Vertical shear force due to local loads	

4.4.6 Method 1 for vertical shear force adjustment at one bulkhead

The required adjustments in shear force at aft or forward transverse bulkhead of the mid-hold are to be made by applying vertical bending moments, M_{Y_aft}, M_{Y_fore} at model ends. For aft most cargo and foremost cargo hold models, the following additional vertical loads are to be applied at the transverse frame positions as shown in Table 7:

- $\delta w'_1$ for aft most cargo hold model
- $\delta w'_3$ for foremost cargo hold model

The required adjustments in shear force at following transverse bulkheads of the mid-hold are given by:

- Aft bulkhead:

$$M_{Y_aft} = M_{Y_fore} = \frac{(x_{fore} - x_{aft})}{2}(Q_{targ-aft} - Q_{aft}) - M'_{1-aft}$$

$$\Delta Q_{aft} = \Delta Q_{fwd} = 0$$

$$\delta w'_1 = \frac{Q_{targ-aft} - Q_{aft} + R_{v_aft}}{(n_1 - 1)} \quad \text{for aftmost cargo hold model only}$$

$$\delta w'_3 = \frac{Q_{targ-aft} - Q_{aft} + R_{v_fore}}{(n_3 - 1)} \quad \text{for foremost cargo hold model only}$$

- Forward bulkhead

$$M_{Y_aft} = M_{Y_fore} = \frac{(x_{fore} - x_{aft})}{2}(Q_{targ-fwd} - Q_{fwd}) - M'_{1-fwd}$$

$$\Delta Q_{aft} = \Delta Q_{fwd} = 0$$

$$\delta w'_1 = \frac{Q_{targ-fwd} - Q_{fwd} + R_{v_aft}}{(n_1 - 1)} \quad \text{for aftmost cargo hold model only}$$

$$\delta w'_3 = \frac{Q_{targ-fwd} - Q_{fwd} + R_{v_fore}}{(n_3 - 1)} \quad \text{for foremost cargo hold model only}$$

where:

M_{Y_aft}, M_{Y_fore}: Vertical bending moment, in kNm, to be applied at the aft and fore ends in accordance with [4.4.10], to enforce the hull girder vertical shear force adjustment as shown in Table 5. The sign convention is that of the FE model axis.

Q_{aft} : Vertical shear force, in kN, due to local loads at aft bulkhead location of mid-hold, x_{b_aft}, resulting from the local loads calculated according to [4.4.3].

Since the vertical shear force is discontinued at the transverse bulkhead location, Q_{aft} is the maximum absolute shear force between the stations located right after and right forward of the aft bulkhead of mid-hold.

Q_{fwd} : Vertical shear force, in kN, due to local loads at the forward bulkhead location of mid-hold, $x_{b\text{-}_fwd}$, resulting from the local loads calculated according to [4.4.3].

Since the vertical shear force is discontinued at the transverse bulkhead location, Q_{fwd} is the maximum absolute shear force between the stations located right after and right forward of the forward bulkhead of mid-hold.

M'_{1-aft}, M'_{1-fwd}: Additional vertical bending moment, in kNm, applicable for aftmost and foremost cargo hold analysis only, taken as:

- Aft most cargo hold model

$$M'_{1-aft} = \frac{\ell_1}{4}(Q_{targ-aft} - Q_{aft} + R_{v_aft})$$

$$M'_{1-fwd} = \frac{\ell_1}{4}(Q_{targ-fwd} - Q_{fwd} + R_{v_aft})$$

- Foremost cargo hold model

$$M'_{1-aft} = \frac{\ell_3}{4}(Q_{targ-aft} - Q_{aft} + R_{v_fore})$$

$$M'_{1-fwd} = \frac{\ell_3}{4}(Q_{targ-fwd} - Q_{fwd} + R_{v_fore})$$

$\delta w'_1$: Distributed load, in kN, at frame in the modelled engine room of aftmost cargo hold model, see also Table 8.

$\delta w'_3$: Distributed load, in kN, at frame in the modelled forepeak of foremost cargo hold model, see also Table 8.

ΔQ_{aft}, ΔQ_{fwd}: Shear force adjustments, as given in Table 8.

R_{υ_aft}, R_{υ_fore}: Reaction forces at the aft and fore ends, in kN, as defined in [4.4.3].

ℓ_1 : Length of the modelled engine room in aftmost cargo hold model, in m. See also Table 8.

ℓ_3 : Length of the modelled forepeak in foremost cargo hold model, in m. See also Table 8.

n_1, n_3 : Number of frame spaces, see Table 8.

4.4.7 Method 2 for vertical shear force adjustment at both bulkheads

The required adjustments in shear force at both transverse bulkheads of the mid-hold are to be made by applying:

- Vertical bending moments, M_{Y_aft}, M_{Y_fore} at model ends and,
- Vertical loads at the transverse frame positions as shown in Table 7 in order to generate vertical shear forces, ΔQ_{aft} and ΔQ_{fwd}, at the transverse bulkhead positions.
- For aft most cargo and foremost cargo hold models, the following additional vertical loads are to be applied at the transverse frame positions as shown in Table 7:
  - $\delta w'_1$ for aft most cargo hold model
  - $\delta w'_3$ for foremost cargo hold model

Table 6 shows examples of the shear adjustment application due to the vertical bending moments and to vertical loads.

$$M_{Y_aft} = M_{Y_fore} = \frac{(x_{fore} - x_{aft})}{2} \cdot \frac{(Q_{targ-fwd} - Q_{fwd} + Q_{targ-aft} - Q_{aft})}{2} - M'_2$$

$$\Delta Q_{fwd} = \frac{Q_{targ-fwd} - Q_{fwd} - (Q_{targ-aft} - Q_{aft})}{2}$$

$$\Delta Q_{aft} = -\Delta Q_{fwd}$$

- Aft most cargo hold model

$$\delta w'_1 = \left(\frac{(Q_{targ-aft} - Q_{aft})(\ell - \ell_2 - \ell_1) + (Q_{targ-fwd} - Q_{fwd})(\ell - \ell_2 - \ell_3)}{2\ell - \ell_1 - 2\ell_2 - \ell_3} + R_{v_{aft}}\right)\frac{1}{(n_1 - 1)}$$

- Foremost cargo hold model

$$\delta w'_3 = \left(\frac{(Q_{targ-fwd} - Q_{fwd})(\ell - \ell_2 - \ell_3) + (Q_{targ-aft} - Q_{aft})(\ell - \ell_2 - \ell_3)}{2\ell - \ell_1 - 2\ell_2 - \ell_3} + R_{v_{fore}}\right)\frac{1}{(n_3 - 1)}$$

where:

M_{Y_aft}, M_{Y_fore}: Vertical bending moment, in kNm, to be applied at the aft and fore ends in accordance with [4.4.10], to enforce the hull girder vertical shear force adjustment. The sign convention is that of the FE model axis.

ΔQ_{aft} : Adjustment of shear force, in kN, at aft bulkhead of mid-hold.

ΔQ_{fwd} : Adjustment of shear force, in kN, at fore bulkhead of mid-hold.

M'_2 : Additional vertical bending moment, in kNm, applicable for aftmost and foremost cargo hold analysis only, taken as:

- Aftmost cargo hold model

$$M'_2 = \frac{\ell_1(\eta_1 - 1)\delta w'_1}{4}$$

- Foremost cargo hold model

$$M'_2 = \frac{\ell_3(\eta_3 - 1)\delta w'_3}{4}$$

$\delta w'_1$: Distributed load, in kN, at frame in the modelled engine room of aftmost cargo hold model, see also Table 8.

$\delta w'_3$: Distributed load, in kN, at frame in the the modelled forepeak of foremost cargo hold model, see also Table 8.

R_{υ_aft}, R_{υ_fore}: Reaction forces at the aft and fore ends, in kN, as defined in [4.4.3].

ℓ_1 : Length of the modelled engine room in aftmost cargo hold model, in m. See also Table 8.

ℓ_3 : Length of the modelled forepeak in foremost cargo hold model, in m. See also Table 8.

n_1, n_3 : Number of frame spaces, see Table 8.

The above adjustments in shear forces, ΔQ_{aft} and ΔQ_{fwd}, at the transverse bulkhead positions are to be generated by applying vertical loads at the transverse frame positions as shown in Table 7. For bulk carriers, the transverse frame positions correspond to the floors. Vertical correction loads are not to be applied to any transverse tight bulkheads, any frames forward of the forward cargo hold and any frames aft of the aft cargo hold of the FE model.

The vertical loads to be applied to each transverse frame to generate the increase/decrease in shear force at the bulkheads may be calculated as shown in Table 7. In case of uniform frame spacing, the amount of vertical force to be distributed at each transverse frame may be calculated in accordance with Table 8.

Table 6 : Target and required shear force adjustment by applying vertical forces

Vertical shear force diagram	Aft Bhd	Fore Bhd
	SF target	SF target
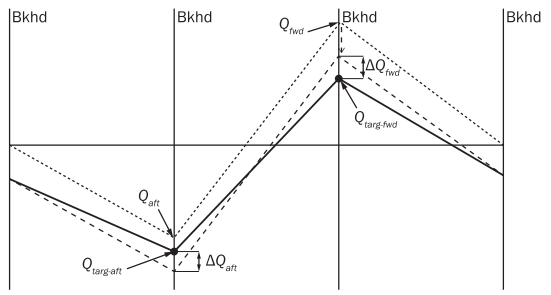	$Q_{targ\text{-}aft}$ (-ve)	$Q_{targ\text{-}fwd}$ (+ve)
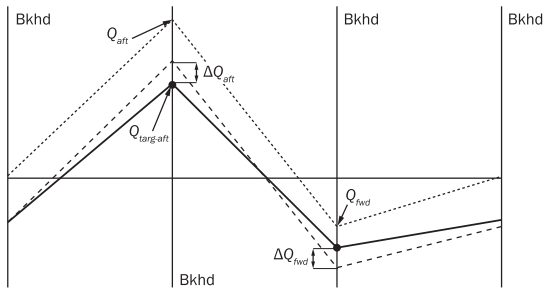	$Q_{targ\text{-}aft}$ (+ve)	$Q_{targ\text{-}fwd}$ (-ve)
——— Vertical shear force after both adjustments - - - - - - - Vertical shear force after adjustment by use of M_{Y_aft} and M_{Y_fore} - - - - - - - - Vertical shear force due to local loads		
Note 1: -ve means negative. Note 2: +ve means positive.		

Table 7 : Distribution of adjusting vertical force at frames and resulting shear force distributions

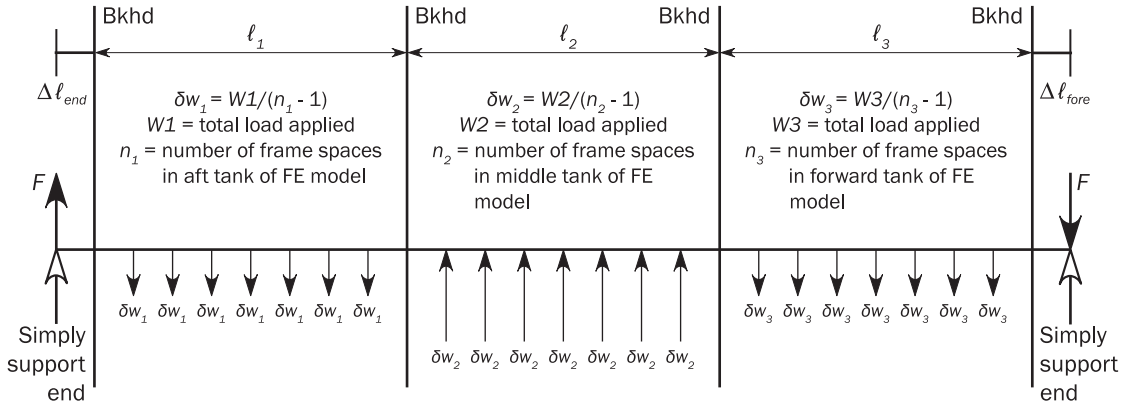

Note: Transverse bulkhead frames not loaded
Frames beyond aft transverse bulkhead of aft most tank and forward bulkhead of forward most tank not loaded
F = Reaction load generated by supported ends

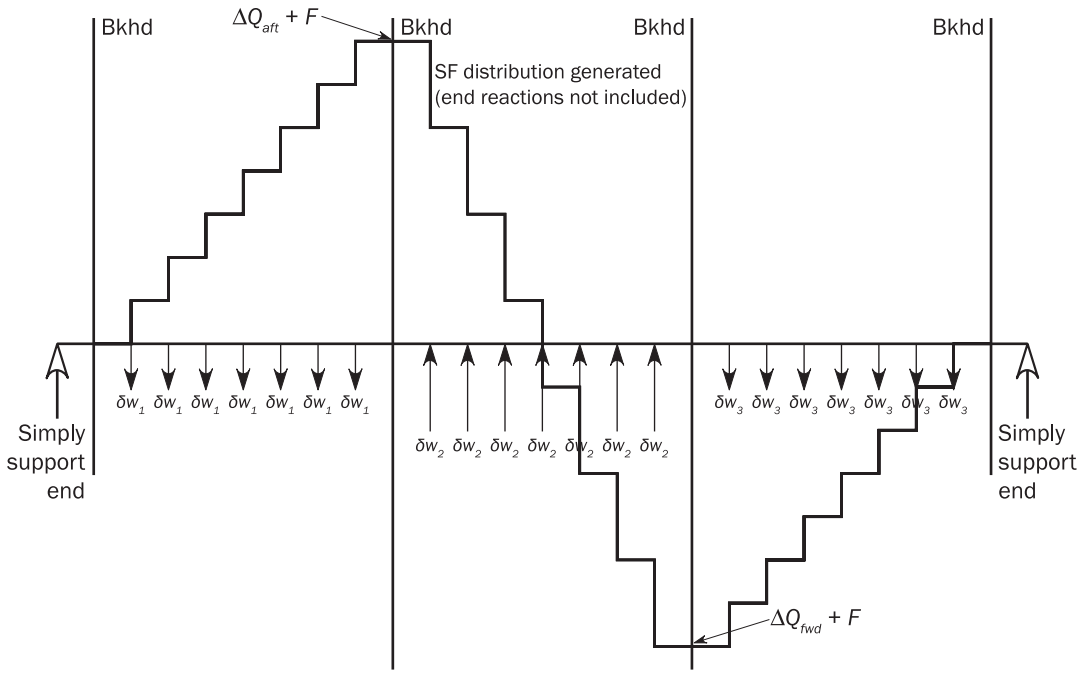

Shear Force distribution due to adjusting vertical force at frames

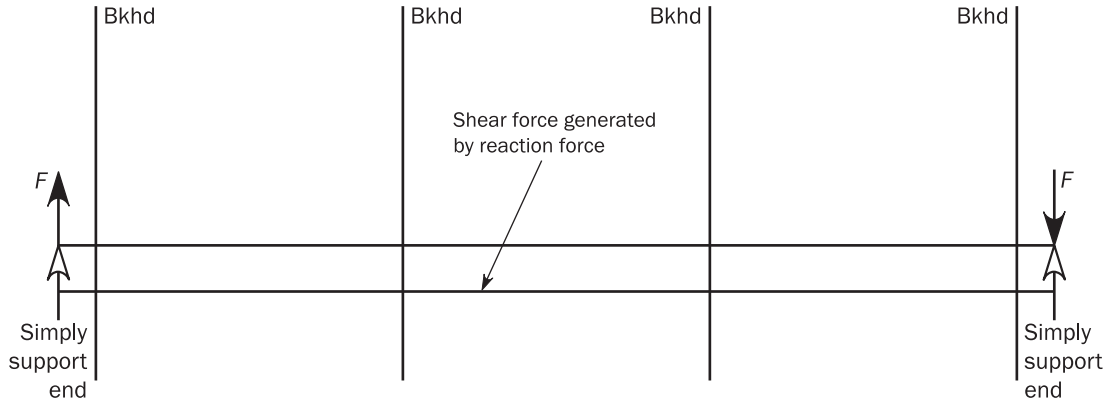

Note: $F = 0$ if $\ell_1 = \ell_3$ and $\Delta\ell_{fore} = \Delta\ell_{end}$, and loads are symmetrical about mid-length of model

Note 1: For definition of symbols, see Table 8.

Table 8 : Formulae for calculation of vertical loads for adjusting vertical shear forces

$\delta w_1 = \dfrac{\Delta Q_{aft}\ 2\ell - \ell_2 - \ell_3 + \Delta Q_{fwd}\ \ell_2 + \ell_3}{n_1 - 1\ 2\ell - l_1 - 2\ell_2 - \ell_3} + \delta w'_1$
$\delta w_2 = \dfrac{(W1 + W3)}{(n_2 - 1)} = \dfrac{(\Delta Q_{aft} - \Delta Q_{fwd})}{(n_2 - 1)}$
$\delta w_3 = \dfrac{-\Delta Q_{fwd}\ 2\ell - \ell_1 - \ell_2 - \Delta Q_{aft}\ \ell_1 + \ell_2}{n_3 - 1\ 2\ell - \ell_1 - 2\ell_2 - \ell_3} - \delta w'_3$
• In general $F = F_{aft} = F_{fwd} = 0.5\left(\dfrac{W1\ (\ell_2 + \ell_1) - W3\ (\ell_2 + \ell_3)}{\ell}\right)$ • For aftmost and foremost cargo hold FE model $F = F_{aft} = \left(\dfrac{W1(\Delta\ell_{fore} + \ell_3 + \ell_2 + 0.5\ell_1) + W2(\Delta\ell_{fore} + \ell_3 + 0.5\ell_2) + W3(\Delta\ell_{fore} + 0.5\ell_3)}{\ell}\right)$
where: ℓ_1 : Length of aft cargo hold of model, in m. ℓ_2 : Length of mid-hold of model, in m. ℓ_3 : Length of forward cargo hold of model, in m. ΔQ_{aft} : Required adjustment in shear force, in kN, at aft bulkhead of middle hold, see [4.4.7]. ΔQ_{fwd} : Required adjustment in shear force, in kN, at fore bulkhead of middle hold, see [4.4.7]. F : End reactions, in kN, due to application of vertical loads to frames. $W1$: Total evenly distributed vertical load, in kN, applied to aft hold of FE model, $(n_1 - 1)\ \delta w_1$. $W2$: Total evenly distributed vertical load, in kN, applied to mid-hold of FE model, $(n_2 - 1)\ \delta w_2$. $W3$: Total evenly distributed vertical load, in kN, applied to forward hold of FE model, $(n_3 - 1)\ \delta w_3$. n_1 : Number of frame spaces in aft cargo hold of FE model. n_2 : Number of frame spaces in mid-hold of FE model. n_3 : Number of frame spaces in forward cargo hold of FE model. δw_1 : Distributed load, in kN, at frame in aft cargo hold of FE model. δw_2 : Distributed load, in kN, at frame in mid-hold of FE model. δw_3 : Distributed load, in kN, at frame in forward cargo hold of FE model. $\delta w'_1$: Additional distributed load, in kN, at frame in the modelled engine room of aftmost cargo hold model. Formulae of $\delta w'_1$ are given in [4.4.6] and [4.4.7] for shear force adjustment method 1 and method 2 accordingly. $\delta w'_3$: Additional distributed load, in kN, at frame in the modelled forepeak of foremost cargo hold model. Formulae of $\delta w'_3$ are given in [4.4.6] and [4.4.7] for shear force adjustment method 1 and method 2 accordingly. $\Delta\ell_{end}$: Distance, in m, between end bulkhead of aft cargo hold to aft end of FE model. $\Delta\ell_{end} = 0$ in the aftmost cargo hold model $\Delta\ell_{fore}$: Distance, in m, between fore bulkhead of forward cargo hold to forward end of FE model. $\Delta\ell_{fore} = 0$ in the foremost cargo hold model ℓ : Total length, in m, of FE model including portions beyond end bulkheads: $= \ell_1 + \ell_2 + \ell_3 + \Delta\ell_{end} + \Delta\ell_{fore}$
Note 1: Positive direction of loads, shear forces and adjusting vertical forces in the formulae is in accordance with Table 6 and Table 7. Note 2: $W1 + W3 = W2$ (not applicable for aftmost and foremost cargo FE model). Note 3: The above formulae are only applicable if uniform frame spacing is used within each hold. The length and frame spacing of individual cargo holds may be different.

If non-uniform frame spacing is used within each cargo hold, the average frame spacing $\ell_{av\text{-}i}$ is used to calculate the average distributed frame loads $\delta w_{av\text{-}i}$, according to Table 8, where i = 1, 2, 3 for each hold.

Then $\delta w_{av\text{-}i}$ is redistributed to the non-uniform frame as follows:

$$\delta w_i^k = \delta w_{av-i} \frac{\ell^k_{av-i}}{\ell_{av-i}} \qquad k = 1, 2, ..., n_i - 1 \text{ , for each frame in cargo hold i, i = 1, 2, 3}$$

where:

$\ell_{av\text{-}i}$: Average frame spacing, in m, calculated as ℓ_i / n_i, in cargo hold i with i = 1, 2, 3.

ℓ_i : Length, in m, of the cargo hold i with i = 1, 2, 3 as defined in Table 8.

n_i : Number of frame spacing in cargo hold i with i = 1, 2, 3 as defined in Table 8.

$\delta w_{av\text{-}i}$: Average uniform frame spacing, in m, distributed force calculated according to Table 8 with the average frame spacing $\ell_{av\text{-}i}$ in cargo hold i with i = 1, 2, 3.

δw_i^k : Distributed load, in kN, for non-uniform frame k in cargo hold i.

$\ell^k_{av\text{-}i}$: Equivalent frame spacing, in m, for each frame k with k = 1, 2,..., n_i - 1, in cargo hold i, taken as:

$$\ell^k_{av-i} = \ell_i^1 - \frac{\ell_{av-i}\,\ell_i^1}{\ell_i^1 + \ell_i^{n_i}} + \frac{\ell_i^2}{2} \qquad \text{for k = 1 (first frame), in cargo hold i}$$

$$\ell^k_{av-i} = \frac{\ell_i^k}{2} + \frac{\ell_i^{k+1}}{2} \qquad \text{for k = 2, 3, ..., } n_1 \text{ - 2, in cargo i}$$

$$\ell^k_{av-i} = \ell_i^{n_i} - \frac{\ell_{av-i}\,\ell_i^{n_i}}{\ell_i^1 + \ell_i^{n_i}} + \frac{\ell_i^{n_i-1}}{2} \qquad \text{for k = } n_i \text{ - 1 (last frame), in cargo i}$$

ℓ_i^k : Frame spacing, in m, between the frame k - 1 and k in the cargo hold i:

The required vertical load δw_i for a uniform frame spacing or δw_i^k for non-uniform frame spacing, are to be applied by following the shear flow distribution at the considered cross section, as described in Ch 5, App 1. For a frame section under vertical load δw_i, the shear flow, q_f, at the middle point of the element is calculated as:

$$q_{f-k} = \frac{\delta w_i}{I_{y-n50}} Q_{k-n50}$$

where:

$q_{f\text{-}k}$: Shear flow calculated at the middle of the k-th element of the transverse frame, in N/mm.

δw_i : Distributed load at each transverse frame location for i-th cargo hold, i = 1, 2, 3, as defined in Table 8, in N.

$I_{y\text{-}n50}$: Moment of inertia of the hull girder cross section, in mm^4.

$Q_{k\text{-}n50}$: First moment about neutral axis of the accumulative section area starting from the open end (shear stress free end) of the cross section to the point s_k for shear flow $q_{f\text{-}k}$, in mm^3, taken as;

$$Q_{k-n50} = \int_0^{s_k} z_{neu}\, t_{n50}\, ds$$

z_{neu} : Vertical distance from the integral point, s, to the vertical neutral axis.

t_{n50} : Net thickness, in mm, of the plate at the integral point of the cross section.

The distributed shear force at j-th FE grid of the transverse frame, $F_{j\text{-}grid}$, is obtained from the shear flow of the connected elements as following:

$$F_{j-gird} = \sum_{k=1}^{n} q_{f-k} \frac{\ell_k}{2}$$

where:

ℓ_k : Length of the *k*-th element of the transverse frame connected to the grid *j*, in mm.

n : Total number of elements connect to the grid *j*.

The shear flow has direction along the cross section and therefore the distributed force, $F_{j\text{-}grid}$, is a vector force. For vertical hull girder shear correction, the vertical and horizontal force components calculated with above mentioned shear flow method need to be applied to the cross section.

4.4.8 Procedure to adjust vertical and horizontal bending moments for midship cargo hold region

In case the target vertical bending moment needs to be reached, an additional vertical bending moment is to be applied at both ends of the cargo hold FE model to generate this target value in the mid-hold of the model. This end vertical bending moment is given as follows:

$$M_{v-end} = M_{v-targ} - M_{v-peak}$$

where:

$M_{v\text{-}end}$: Additional vertical bending moment, in kNm, to be applied to both ends of FE model in accordance with [4.4.10].

$M_{v\text{-}targ}$: Hogging (positive) or sagging (negative) vertical bending moment, in kNm, as specified in [4.3.2].

$M_{v\text{-}peak}$: Maximum or minimum bending moment, in kNm, within the length of the mid-hold due to the local loads described in [4.4.3] and due to the shear force adjustment as defined in [4.4.5].

$M_{v\text{-}peak}$ is to be taken as the maximum bending moment if $M_{v\text{-}targ}$ is hogging (positive) and as the minimum bending moment if $M_{v\text{-}targ}$ is sagging (negative). $M_{v\text{-}peak}$ is to be calculated as follows based on a simply supported beam model:

$$M_{v-peak} = \text{Extremum}\left\{M_{V_FEM}(x) + M_{lineload} + M_{Y_aft}\left(2\,\frac{x - x_{aft}}{x_{fore} - x_{aft}} - 1\right)\right\}$$

$M_{V_FEM}(x)$: Vertical bending moment, in kNm, at position *x*, due to the local loads as described in [4.4.3].

M_{Y_aft} : End bending moment, in kNm, to be taken as:

- When method 1 is applied: the value as defined in [4.4.6].
- When method 2 is applied: the value as defined in [4.4.7].
- Otherwise: $M_{Y_aft} = 0$

$M_{lineload}$: Vertical bending moment, in kNm, at position *x*, due to application of vertical line loads at frames according to method 2, to be taken as:

$$M_{lineload} = -\,(x - x_{aft})\,F - \sum_i (x - x_i)\,\delta w_i \quad \text{when} \quad x_i < x$$

F : Reaction force, in kN, at model ends due to application of vertical loads to frames as defined in Table 7.

x : *X*-coordinate, in m, of frame in way of the mid-hold.

δw_i : vertical load, in kN, at web frame station *i* applied to generate required shear force.

$\delta w_i = -\,\delta w_1$ when frame *i* is within after hold

$\delta w_i = \delta w_2$ when frame *i* is within mid-hold

$\delta w_i = -\,\delta w_3$ when frame *i* is within forward hold

In case the target horizontal bending moment needs to be reached, an additional horizontal bending moment is to be applied at the ends of the cargo tank FE model to generate this target value within the mid-hold. The additional horizontal bending moment is to be taken as:

$$M_{h-end} = M_{h-targ} - M_{h-peak}$$

where:

$M_{h\text{-}end}$: Additional horizontal bending moment, in kNm, to be applied to both ends of the FE model according to [4.4.10].

$M_{h\text{-}targ}$: Horizontal bending moment, as defined in [4.3.4].

$M_{h\text{-}peak}$: Maximum or minimum horizontal bending moment, in kNm, within the length of the mid-hold due to the local loads described in [4.4.3].

$M_{h\text{-}peak}$ is to be taken as the maximum horizontal bending moment if $M_{h\text{-}targ}$ is positive (starboard side in tension) and as the minimum horizontal bending moment if $M_{h\text{-}targ}$ is negative (port side in tension).

$M_{h\text{-}peak}$ is to be calculated as follows based on a simply supported beam model:

$$M_{h-peak} = \text{Extremum}\ \{M_{H_FEM}(x)\}$$

$M_{H_FEM}(x)$: Horizontal bending moment, in kNm, at position x, due to the local loads as described in [4.4.3].

The vertical and horizontal bending moments are to be calculated over the length of the mid-hold to identify the position and value of each maximum/minimum bending moment.

4.4.9 Procedure to adjust vertical and horizontal bending moments outside midship cargo hold region

To reach the vertical hull girder target values at each frame and transverse bulkhead position, as defined in [4.3.2], the vertical bending moment adjustments, m_{vi}, are to be applied at web frames and transverse bulkhead positions of the finite element model, as shown in Figure 19. The vertical bending moment adjustment at each longitudinal location, i, is to be calculated as follows:

$$f(i) = M_{v-\text{targ}}(i) - M_{V-FEM}(i) - M_{lineload}(i) - M_{Y-aft}\left(2 \cdot \frac{x_i - x_{aft}}{x_{fore} - x_{aft}} - 1\right)$$

$$m_{vi} = \frac{f(i) + f(i+1)}{2} - \sum_{j=0}^{i-1} m_{vj}$$

$$m_{v_end} = -\sum_{j=0}^{n_t} m_{vj}$$

where:

i : Index corresponding to the i-th station, starting from i =1 at the aft end section up to n_t

n_t : Total number of longitudinal stations where the vertical bending moment adjustment, m_{vi}, is applied.

m_{vi} : Vertical bending moment adjustment, in kNm, to be applied at transverse frame or bulkhead at station i.

m_{v_end} : Vertical bending moment adjustment, in kNm, to be applied, at the fore end section (n_t+1 station).

m_{vj} : Argument of summation to be taken as:

- m_{vo}= 0 when j=0
- m_{vj} = m_{vi} when j=i

$M_{v\text{-}targ}(i)$: Required target vertical bending moment, in kNm, at station i, calculated in accordance with [4.3.2].

$M_{V\text{-}FEM}(i)$: Vertical bending moment distribution, in kNm, at station i due to local loads as given in [4.4.3].

$M_{lineload}(i)$:Vertical bending moment, in kNm, at station i, due to the line load for the vertical shear force correction as required in [4.4.8].

Figure 19 : Adjustments of bending moments outside midship cargo hold region.

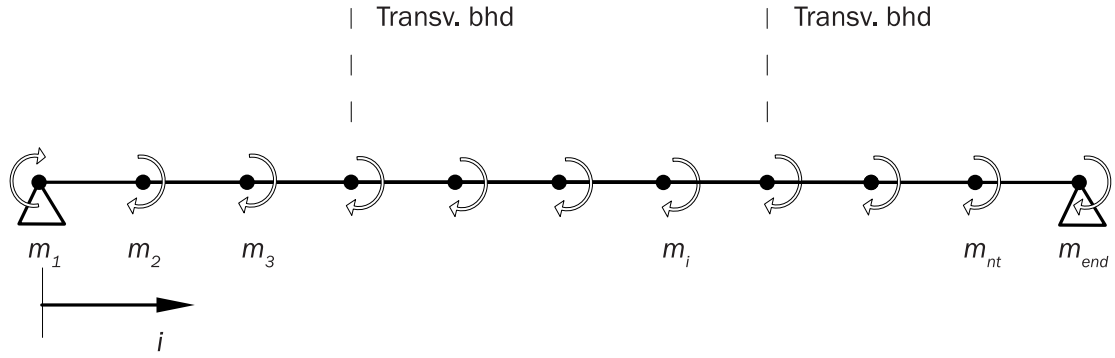

m_{hi} can be substituted to m_{vi} in this figure and m_i is the positive bending moment in FE coordinate system

To reach the horizontal hull girder target values at each frame and transverse bulkhead position as defined in [4.3.4], the horizontal bending moment adjustments, m_{hi}, are to be applied at web frames and transverse bulkhead positions of the finite element model, as shown in Figure 19. The horizontal bending moment adjustment at each longitudinal location, i, is to be calculated as follows:

$$f(i) = M_{h-targ}(i) - M_{H-FEM}(i)$$

$$m_{hi} = \frac{f(i) + f(i+1)}{2} - \sum_{j=0}^{i-1} m_{hj}$$

$$m_{h_end} = -\sum_{j=0}^{n_t} m_{hj}$$

where:

i : Longitudinal location for bending moment adjustments, m_{hi}.

n_t : Total number of longitudinal stations where the horizontal bending moment adjustment, m_{hi}, is applied.

m_{hi} : Horizontal bending moment adjustment, in kNm, to be applied at transverse frame or bulkhead at station i.

m_{h_end} : Horizontal bending moment adjustment, in kNm, to be applied at the fore end section (n_t+1 station).

m_{hj} : Argument of summation to be taken as:

- m_{ho} = 0 when $j=0$
- $m_{hj} = m_{hi}$ when $j=i$

$M_{h\text{-}targ}(i)$: Required target horizontal bending moment, in kNm, at station i, calculated in accordance with [4.3.4].

$M_{H\text{-}FEM}(i)$: Horizontal bending moment distribution, in kNm, at station i due to local loads as given in [4.4.3].

The vertical and horizontal bending moment adjustments, m_{vi} and m_{hi}, are to be applied at all web frames and bulkhead positions of the FE model. The adjustments are to be applied in FE model by distributing longitudinal axial nodal forces to all hull girder bending effective longitudinal elements in accordance with [4.4.10].

4.4.10 Application of bending moment adjustments on the FE model

The required vertical and horizontal bending moment adjustments are to be applied to the considered cross section of the cargo hold model by distributing longitudinal axial nodal forces to all hull girder bending effective longitudinal elements of the considered cross section according to Ch 5, Sec 1, [1.2] as follows:

- For vertical bending moment:

$$(F_x)_i = \frac{M_v}{I_{y-n50}} \frac{A_{i-n50}}{n_i} z_i$$

- For horizontal bending moment:

$$(F_x)_i = \frac{M_h}{I_{z-n50}} \frac{A_{i-n50}}{n_i} y_i$$

where:

M_v : Vertical bending moment adjustment, in kNm, to be applied to the considered cross section of the model.

M_h : Horizontal bending moment adjustment, in kNm, to be applied to the considered cross section the ends of the model.

$(F_x)_i$: Axial force, in kN, applied to a node of the *i*-th element.

$I_{y\text{-}n50}$: Hull girder vertical moment of inertia, in m^4, of the considered cross section about its horizontal neutral axis.

$I_{z\text{-}n50}$: Hull girder horizontal moment of inertia, in m^4, of the considered cross section about its vertical neutral axis.

Z_i : Vertical distance, in m, from the neutral axis to the centre of the cross sectional area of the *i*-th element.

Y_i : Horizontal distance, in m, from the neutral axis to the centre of the cross sectional area of the *i*-th element.

$A_{i\text{-}n50}$: Cross sectional area, in m^2, of the *i*-th element.

n_i : Number of nodal points of *i*-th element on the cross section, n_i = 1 for beam element, n_i = 2 for 4-node shell element.

For cross sections other than cross sections at the model end, the average area of the corresponding *i*-th elements forward and aft of the considered cross section is to be used.

4.5 Procedure to adjust hull girder torsional moments

4.5.1 General

The procedure in this sub-article describes how to adjust the hull girder torsional moment distribution on the cargo hold FE model to achieve the target torsional moment at the target location. The hull girder torsional moment target values are given in [4.3.5].

4.5.2 Torsional moment due to local loads

Torsional moment, in kNm, at longitudinal station *i* due to local loads, $M_{T\text{-}FEMi}$ in kNm, is determined by the following formula (see Figure 20):

$$M_{T-FEMi} = \sum_k [f_{hik}(z_{ik} - z_r)] - \sum_k (f_{vik} y_{ik})$$

where:

$M_{T\text{-}FEMi}$: Lumped torsional moment, in kNm, due to local load at longitudinal station *i*.

z_r : Vertical coordinate of torsional reference point, in m:

For bulk carrier, z_r = 0.

For oil tanker, $z_r = z_{sc}$, shear centre at the middle of the mid-hold.

f_{hik} : Horizontal nodal force, in kN, of node *k* at longitudinal station *i*.

f_{vik} : Vertical nodal force, in kN, of node *k* at longitudinal station *i*.

y_{ik} : *Y*-coordinate, in m, of node *k* at longitudinal station *i*.

z_{ik} : *Z*-coordinate, in m, of node *k* at longitudinal station *i*.

$M_{T\text{-}FEM0}$: Lumped torsional moment, in kNm, due to local load at aft end of the FE model (forward end for foremost cargo hold model), taken as:

$$M_{T-FEM0} = -\sum_k [f_{h0k}(z_{0k} - z_r)] + \sum_k (f_{v0k}\, y_{0k}) + R_{H_fwd}\,(z_{ind} - z_r) \text{ for foremost cargo hold model}$$

$$M_{T-FEM0} = \sum_k [f_{h0k}(z_{0k} - z_r)] - \sum_k (f_{v0k}\, y_{0k}) + R_{H_aft}\,(z_{ind} - z_r) \text{ for the other cargo hold models}$$

R_{H_fwd} : Horizontal reaction forces, in kN, at the forward end, as defined in [4.4.3].

R_{H_aft} : Horizontal reaction forces, in kN, at the aft end, as defined in [4.4.3].

z_{ind} : Vertical coordinate, in m, of independent point as defined in [2.5.3].

Figure 20 : Station forces and acting location of torsional moment at section

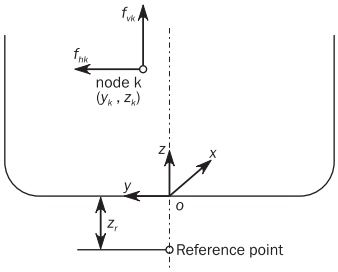

4.5.3 Hull girder torsional moment

The hull girder torsional moment, $M_{T\text{-}FEM}(x_j)$ in kNm, is obtained by accumulating the station torsional moment from the aft end section (forward end for foremost cargo hold model) as follows:

$$M_{T-FEM}(x_j) = \sum_i M_{T-FEMi}$$

- when $x_i \geq x_j$ for foremost cargo hold model,
- when $x_i < x_j$ otherwise.

where:

$M_{T\text{-}FEM}(x_j)$: Hull girder torsional moment, in kNm, at longitudinal station x_j.

x_j : *X*-coordinate, in m, of considered longitudinal station *j*.

The torsional moment distribution given in [4.5.2], has a step at each longitudinal station.

4.5.4 Procedure to adjust hull girder torsional moment to target value

The torsional moment is to be adjusted by applying a hull girder torsional moment $M_{T\text{-}end}$ in kNm, at the independent point of the aft end section of the model (forward end for foremost cargo hold model), given as follows:

$$M_{T-end} = M_{wt-targ} - M_{T-FEM}(x_{targ})$$

where:

x_{targ} : *X*-coordinate, in m, of the target location for hull girder torsional moment, as defined in [4.3.5].

$M_{wt\text{-}targ}$: Target hull girder torsional moment, in kNm, specified in [4.3.5], to be achieved at the target location.

$M_{T\text{-}FEM}(x_{targ})$: Hull girder torsional moment, in kNm, at target location due to local loads.

Due to the step of hull girder torsional moment at each longitudinal station, the hull girder torsional moment is to be selected from the values aft and forward of the target location as follows: Maximum value for positive torsional moment and minimum value for negative torsional moment.

4.6 Summary of hull girder load adjustments

4.6.1

The required methods of hull girder load adjustments for different cargo hold regions are given in Table 9.

Table 9 : Overview of hull girder load adjustments in FE analyses

	Midship cargo hold region	After and Forward cargo hold region	Aft most cargo holds	Foremost cargo holds
Adjustment of Vertical Shear Forces	See [4.4.5]			
Adjustment of Bending Moments	See [4.4.8]	See [4.4.9]		
Adjustment of Torsional Moment	See [4.5.4]			

5 ANALYSIS CRITERIA

5.1 General

5.1.1 Evaluation areas

Verification of results against the acceptance criteria is to be carried out within the longitudinal extent of the mid-hold, as shown in Figure 21 and Figure 22.

Figure 21 : Longitudinal extent of evaluation area for oil tanker

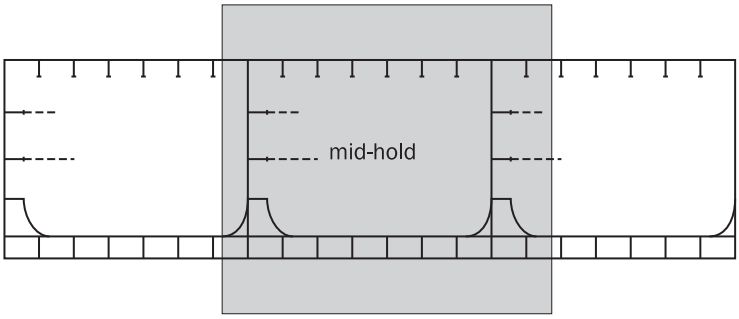

Figure 22 : Longitudinal extent of evaluation area for bulk carrier

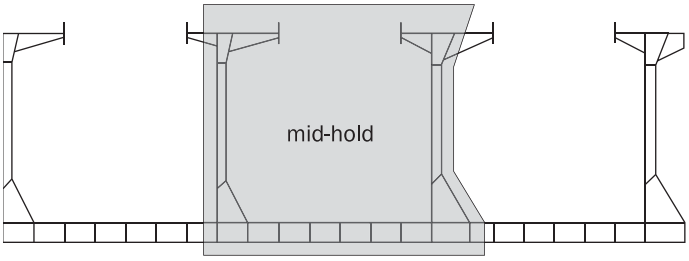

5.1.2 Structural members

The following structural elements within the evaluation area are to be verified with the criteria given in [5.2] and [5.3]:

- All hull girder longitudinal structural members,
- All primary supporting structural members and bulkheads within the mid-hold,
- All structural members being part of the transverse bulkheads, such as:
  - For oil tanker: stringer, buttress structure, stool tanks, partial girders together with attached transverse structures,

- For bulk carrier: stool tanks together with connected longitudinal girders and double bottom floors,

- All structural members being part of the collision bulkhead, and extending to one web frame spacing forward of the collision bulkhead,
- All structural members being part of the forward transverse bulkhead of the machinery space and all hull girder longitudinal structural members aft of this transverse bulkhead within the extent of 15% of the aftmost cargo hold length excluding slop tanks.

5.2 Yield strength assessment

5.2.1 Von Mises stress

For all plates of the structural members defined in [5.1.2], the von Mises stress, σ_{vm}, in N/mm^2, is to be calculated based on the membrane normal and shear stresses of the shell element. The stresses are to be evaluated at the element centroid of the mid-plane (layer), as follows:

$$\sigma_{vm} = \sqrt{\sigma_x^2 - \sigma_x \sigma_y + \sigma_y^2 + 3\tau_{xy}^2}$$

where:

σ_x, σ_y : Element normal membrane stresses, in N/mm^2.

τ_{xy} : Element shear stress, in N/mm^2.

5.2.2 Axial stress in beams and rod elements

For beams and rod elements, the axial stress, σ_{axial}, in N/mm^2, is to be calculated based on axial force alone. The axial stress is to be evaluated at the middle of element length.

5.2.3 Coarse mesh permissible yield utilisation factors

The coarse mesh permissible yield utilisation factors, λ_{yperm}, given in Table 10, are based on the mesh sizes and element types described in [2.3] to [2.4].

The yield utilisation factor resulting from element stresses of each structural component are not to exceed the permissible values as given in Table 10.

Table 10 : Coarse mesh permissible yield utilisation factor

Structural component	Coarse mesh permissible yield utilisation factor, λ_{yperm}
Plating of all longitudinal hull girder structural members, primary supporting structural members and bulkheads. Face plate of primary supporting members modelled using shell or rod elements. Dummy rod of corrugated bulkhead	1.0 (load combination S+D) 0.8 (load combination S)
Corrugation of vertically corrugated bulkheads with lower stool and horizontally corrugated bulkhead, under lateral pressure from liquid loads, for shell elements only. Supporting structure in way of lower end of corrugated bulkheads without lower stool (1).	0.90 (load combination S+D) 0.72 (load combination S)
Corrugation of vertically corrugated bulkheads without lower stool under lateral pressure from liquid loads and without lower stool, for shell elements only.	0.81 (load combination S+D) 0.65 (load combination S)

(1) Supporting structure for a transverse corrugated bulkhead refers to the structure in the longitudinal direction within half a web frame space forward and aft of the bulkhead, and within a vertical extent equal to the corrugation depth.
Supporting structure for a longitudinal corrugated bulkhead refers to the structure in transverse direction within 3 longitudinal stiffener spacings from each side of the bulkhead, and within a vertical extent equal to the corrugation depth.

5.2.4 Yield criteria

The structural elements given in [5.1.2] are to comply with the following criteria:

$\lambda_y \leq \lambda_{yperm}$

where:

λ_y : Yield utilisation factor.

$$\lambda_y = \frac{\sigma_{vm}}{R_Y} \text{ for shell elements in general.}$$

$$\lambda_y = \frac{|\sigma_{axial}|}{R_Y} \text{ for rod or beam elements in general.}$$

σ_{vm} : Von Mises stress, in N/mm^2.

σ_{axial} : Axial stress in rod or beam element, in N/mm^2.

λ_{yperm} : Coarse mesh permissible yield utilisation factors defined in Table 10.

The yield check criteria is to be based on axial stress for the following members:

- The flange of primary supporting members,
- The intersections between the flange and web of the corrugations, according to [5.2.5].

Where the von Mises stress of the elements in the cargo hold FE model in way of the area under investigation by fine mesh exceeds the yield criteria, average von Mises stress, obtained from the fine mesh analysis, calculated over an area equivalent to the mesh size of the cargo hold finite element model is to satisfy the yield criteria above.

In way of cut-outs, yield utilisation factor is to be obtained with shear stress correction, as given in [5.2.6].

5.2.5 Corrugation of corrugated bulkhead

The stress in corrugation of corrugated bulkheads is to be evaluated based on:

a) The von Mises stress, σ_{vm}, in shell elements on the flange and web of the corrugation.

b) The axial stress, σ_{axial}, in dummy rod elements, modelled with unit cross sectional properties at the intersection between the flange and web of the corrugation.

5.2.6 Shear stress correction for cut-outs

Except as indicated in [5.2.7], the element shear stress in way of cut-outs in webs is to be corrected for loss in shear area in accordance with the following formula. The corrected element shear stress is to be used to calculate the von Mises stress of the element for verification against the yield criteria.

$$\tau_{cor} = \frac{h\ t_{mod-n50}}{A_{shr-n50}}\ \tau_{elem}$$

where:

τ_{cor} : Corrected element shear stress, in N/mm^2.

h : Height of web of girder, in mm, in way of opening, see Table 1. Where the geometry of the opening is modelled, h is to be taken as the height of web of the girder deducting the height of the modelled opening.

$t_{mod-n50}$: Modelled web thickness, in mm, in way of opening.

$A_{shr-n50}$: Effective net shear area of web, in mm^2, taken as the web area deducting the area lost of all openings, including slots for stiffeners, calculated in accordance with Ch 3, Sec 7, [1.4.8].

τ_{elem} : Element shear stress, in N/mm^2, before correction.

5.2.7 Exceptions for shear stress correction for openings

Correction of element shear stress due to presence of cut-outs is not required for cases given in Table 11 provided λ_y/C_r complies with the criteria given in [5.2.4].

Table 11 : Exceptions for shear stress correction

Identification	Figure	Difference between modelled shear area and the net effective shear area in % of the modelled shear area $\frac{A_{FEM-n50} - A_{shr-n50}}{A_{FEM-n50}} \cdot 100\%$	Reduction factor for yield criteria, C_r
Upper and lower slots for local support stiffeners fitted with lugs or collar plates	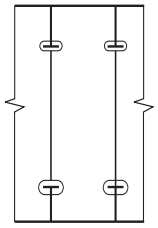	< 15%	0.85
Upper or lower slots for local support stiffeners fitted with lugs or collar plates	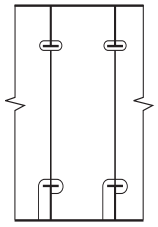	< 20%	0.80
In way of opening; upper and lower slots for local support stiffeners fitted with collar plates	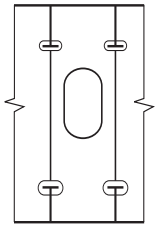	< 40%	0.60
$A_{shr-n50}$: Effective net shear area of the web, in mm^2, taken as the web area without the all opening areas and without the slots for stiffeners, in accordance with Ch 3, Sec 7, [1.4.8].			

5.3 Buckling strength assessment

5.3.1

All structural elements in FE analysis carried out in accordance with this Section are to be assessed individually against the buckling requirements as defined in Ch 8, Sec 4.

SECTION 3
LOCAL STRUCTURAL STRENGTH ANALYSIS

1 OBJECTIVE AND SCOPE

1.1 General

1.1.1

The local strength analysis of structural details is to be in accordance with the requirements given in this section.

1.1.2

The selection of critical locations on the structural members for fine mesh analysis is to be in accordance with this section.

1.1.3 Fine mesh analysis procedure

The details to be assessed by fine mesh analysis are to be modelled according to the requirements given in [4], under the FE load combinations defined in [5] and to comply with the criteria given in [6].

1.1.4 Scope of local structural strength verification

The fine mesh verification is to be performed as follows:

- Fine mesh analysis for the structural details given in [2],
- Screening procedure according to [3].

2 LOCAL AREAS TO BE ASSESSED BY FINE MESH ANALYSIS

2.1 List of mandatory structural details

2.1.1 List of structural details

In the midship cargo hold region, the following structural details are to be assessed according to the fine mesh analysis procedure defined in [1.1.3]:

a) Hopper knuckles for ship with double side as given in [2.1.2],

b) Side frame end brackets and lower hopper knuckle for single side bulk carrier as given in [2.1.3],

c) Large openings as given in [2.1.4],

d) Connections of deck and double bottom longitudinal stiffeners to transverse bulkhead as given in [2.1.5],

e) Connections of corrugated bulkhead to adjoining structure as given in [2.1.6],

f) Bracket at the heel of horizontal stringer as given in [2.1.7].

For each above mentioned structural detail, one fine mesh model is required within all the cargo hold models covering the midship cargo hold region. The selection of the location of this fine mesh model is to be based on requirements given from [2.1.2] to [2.1.7] from all cargo hold analyses in the midship cargo hold region.

2.1.2 Hopper knuckles for ship with double side

Fine mesh analysis is to be carried out for the lower and upper hopper knuckles of either welded or bent type, in way of a typical transverse web frame, as indicated in Figure 1.

For double side arrangements without the hopper plating, i.e. where the inner hull longitudinal bulkhead is fitted directly to the inner bottom, fine mesh analysis is to be carried out for the heel of the transverse web frame.

The transverse web frame which, in the cargo hold analysis, has the maximum yield utilisation factor, λ_y, in knuckle is to be selected for the fine mesh analysis.

2.1.3 Side frame end brackets and lower hopper knuckle for single side bulk carrier

Fine mesh analysis is to be carried out for the lower hopper knuckle of either welded or bent type, lower and upper end bracket of side frame, as indicated in Figure 2.

The side frame which in the cargo hold analysis has the maximum yield utilisation factor, λ_y, in end bracket joints is to be selected for the fine mesh analysis.

2.1.4 Large openings

Large openings in way of primary supporting members, for which their geometry is required to be represented in the cargo hold model in accordance with Ch 7, Sec 2, [2.4.9], are to be assessed by fine mesh analysis.

The structural member in way of the large openings having the maximum yield utilisation factor, λ_y, in the cargo hold analysis is to be selected for the fine mesh analysis.

2.1.5 Connections between deck and double bottom longitudinal stiffeners and adjoining structures of transverse bulkhead

Fine mesh analysis is to be carried out for the connections of deck and double bottom longitudinal stiffeners and adjoining structures of transverse bulkhead, either plane or corrugated bulkhead. The adjoining structures of transverse bulkhead include the structural members in way of the bulkhead, the partial deck girders and partial double bottom girders, if any.

For example, the following structural members are to be assessed, some of them being shown in Figure 3:

- At least one pair of connections between inner and outer bottom longitudinal stiffeners and adjoining structures of transverse bulkhead.
- At least one pair of connections between inner and outer bottom longitudinal stiffeners and adjoining structures of adjacent floor to the transverse bulkhead.
- At least one connection between deck longitudinal stiffener (fitted above or below deck) and adjoining vertical structure of transverse oil tight bulkhead.
- Connection between deck longitudinal partial girder on top of transverse oil tight bulkheads when fitted and adjoining vertical structure of transverse oil tight bulkhead.
- Connection between bottom longitudinal partial girder in way of transverse oil tight bulkheads when fitted and adjoining vertical structure of transverse oil tight bulkhead.

The selection of the connections between longitudinal and vertical stiffeners to be analysed is to be based on the maximum relative deflection between supports, i.e. between floor and transverse bulkhead or between deck transverse and transverse bulkhead. Where there is a significant variation in end connection arrangement between stiffeners or scantlings, analyses of additional connections may be required by the Society.

Outside the midship cargo hold region, the scantlings of the connections as given above are not to be less than the required scantlings obtained for the midship cargo hold region unless an equivalent strength is demonstrated by fine mesh analysis.

Figure 1 : Mandatory areas at hopper knuckles for ships with double side

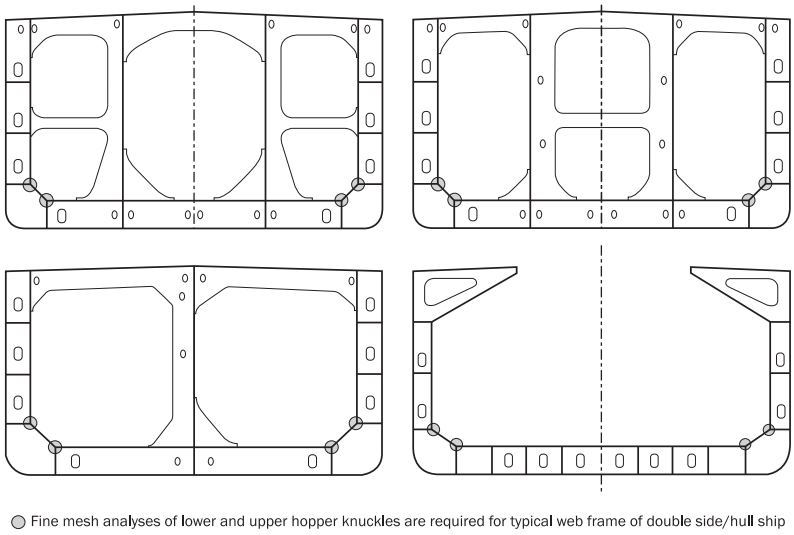

Figure 2 : Mandatory areas at lower upper knuckle and side frame end brackets for single side bulk carrier

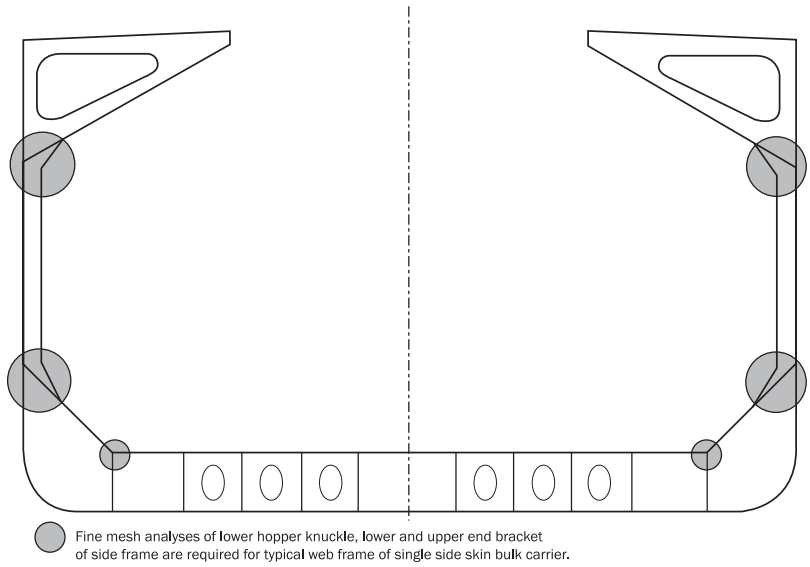

2.1.6 Connections between corrugation and adjoining lower structure

Fine mesh analysis is to be carried out for connections between corrugation and adjoining lower supporting structures. For example, the following structural members, as shown in Figure 4, are to be assessed:

- Connection of the corrugation and supporting structure in way of lower stool shelf plate.
- Connection of the corrugation and lower supporting structure to inner bottom if no lower stool is fitted.
- Connection of the corrugation and the upper corner of the gusset plate if shedder plate with a gusset plate is fitted at top of the lower stool.

The corrugation unit as defined in Ch 8, Sec 4, [3.3.2] which, in the cargo hold analysis, has the maximum yield utilisation factor, λ_y, in way of the corrugation connection, is to be selected for the fine mesh analysis.

Where there is a significant variation in the arrangement of supporting structure of the corrugation, analysis of additional locations may be required by the Society.

For ships with both longitudinal and transverse corrugated bulkheads, fine mesh analysis is required for the connection between corrugations and supporting structure in way of the lower stool shelf plate or inner bottom, if no lower stool is fitted, at the intersection between longitudinal and transverse corrugated bulkheads.

Figure 3 : Examples of mandatory areas at connections between double bottom and deck longitudinals and adjoining structure of transverse bulkhead

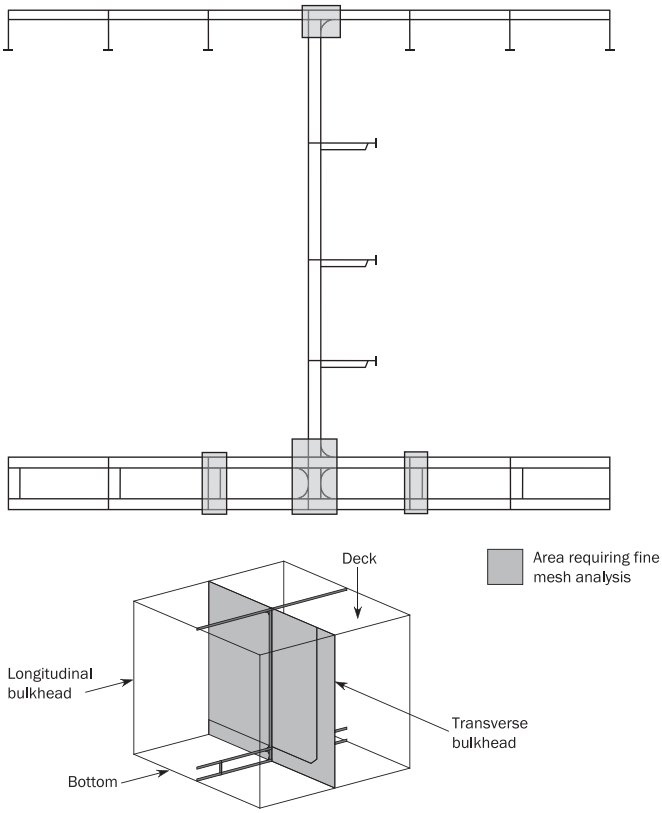

Figure 4 : Mandatory areas at connections between corrugations and adjoining lower stool

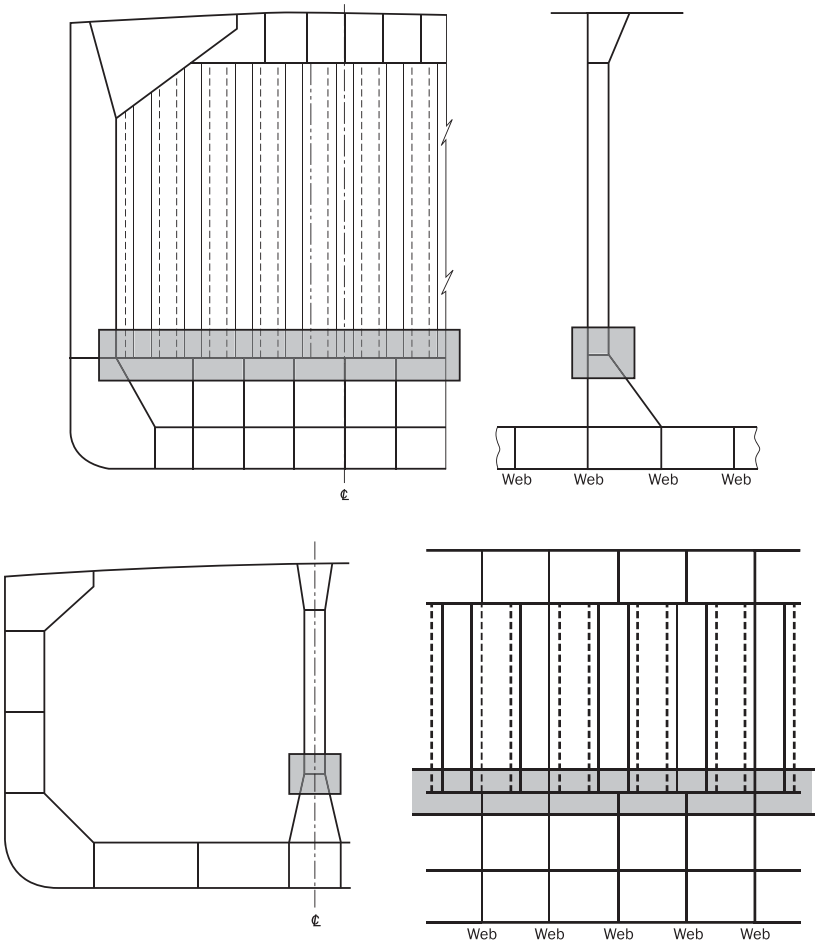

2.1.7 Bracket at the heel of horizontal stringer

Fine mesh analysis is to be carried out for the bracket at the heel of horizontal stringers. All structural elements adjacent to the heel including the inner hull, longitudinal and transverse bulkhead are to satisfy the stress acceptance criteria. The heel of horizontal stringer which, in the cargo hold analysis, has the maximum yield utilization factor, λ_y, is to be selected for the fine mesh analysis. Where there is a significant variation in the arrangement of the bracket at the heel and the horizontal stringer, analysis of additional locations may be required by the Society.

3 SCREENING PROCEDURE

3.1 Screening areas

3.1.1

The structural details subject to this screening procedure are checked in the following ship areas:

- Within the full cargo hold region for the details given in [3.2.1],
- Outside midship cargo hold region for the details given in [3.2.2].

3.2 List of structural details

3.2.1 Cargo hold region

The following structural details and areas in the cargo hold region are to be evaluated by screening:

a) Openings which do not require modelling and manholes, see Ch 7, Sec 2, [2.4.9], in way of web of primary supporting members, such as transverse web frame as indicated in Table 1 and Table 2, horizontal stringers as indicated in Table 3, floors and longitudinal girders in double bottom.

b) Bracket toes on transverse web frame as indicated in Table 1 and Table 2, horizontal stringer and transverse plane bulkhead connected to double bottom or buttress structure specified in Table 3.

c) Heels of transverse bulkhead horizontal stringers specified in Table 3.

d) Connections of transverse lower stool to double bottom girders and longitudinal lower stool to double bottom floors as indicated in Figure 5.

e) Connection of lower hopper to transverse lower stool structure as indicated in Figure 5.

f) Connection of topside tank to inner side as indicated in Figure 6.

g) Connection of corrugation and upper supporting structure to upper stool as indicated in Figure 7.

h) Hatch corner area, such as the hatch coaming end bracket, the hatch corner and the hatch end beam connection as indicated in Figure 8.

Within each group of the structural details having the same geometry and the same relative location inside the cargo region, the screening verification can be performed for the detail for which the yield utilisation factor, λ_y, is maximum

3.2.2 Outside midship cargo hold region

The following structural details outside midship cargo hold region are to be evaluated by screening:

a) Hopper knuckle, as defined in [2.1.2] and [2.1.3],

b) Side frame end bracket, as defined in [2.1.3],

c) Large openings, as defined in [2.1.4],

d) Connections of corrugation to adjoining structure, as defined in [2.1.6],

e) Bracket at the heel of horizontal stringers in [2.1.7].

The connections of corrugation to adjoining structure and the bracket at the heel of horizontal stringers to be screened are to be similar in its geometry, its proportion and its relative location to the corresponding detail modelled in fine mesh in the midship cargo hold region.

When the connections of corrugation to adjoining structure and the bracket at the heel of horizontal stringers outside the midship cargo hold region are different from the corresponding detail modelled in fine mesh in the midship cargo hold region, a fine mesh analysis is to be performed for the detail located where the yield utilisation factor, λ_y, is maximum for structural details having the same geometry and the same relative location.

When it is deemed necessary, the Society may request a fine mesh analysis to be performed according to [1.1.3].

Table 1 : Screening areas of transverse web frame in oil tanker

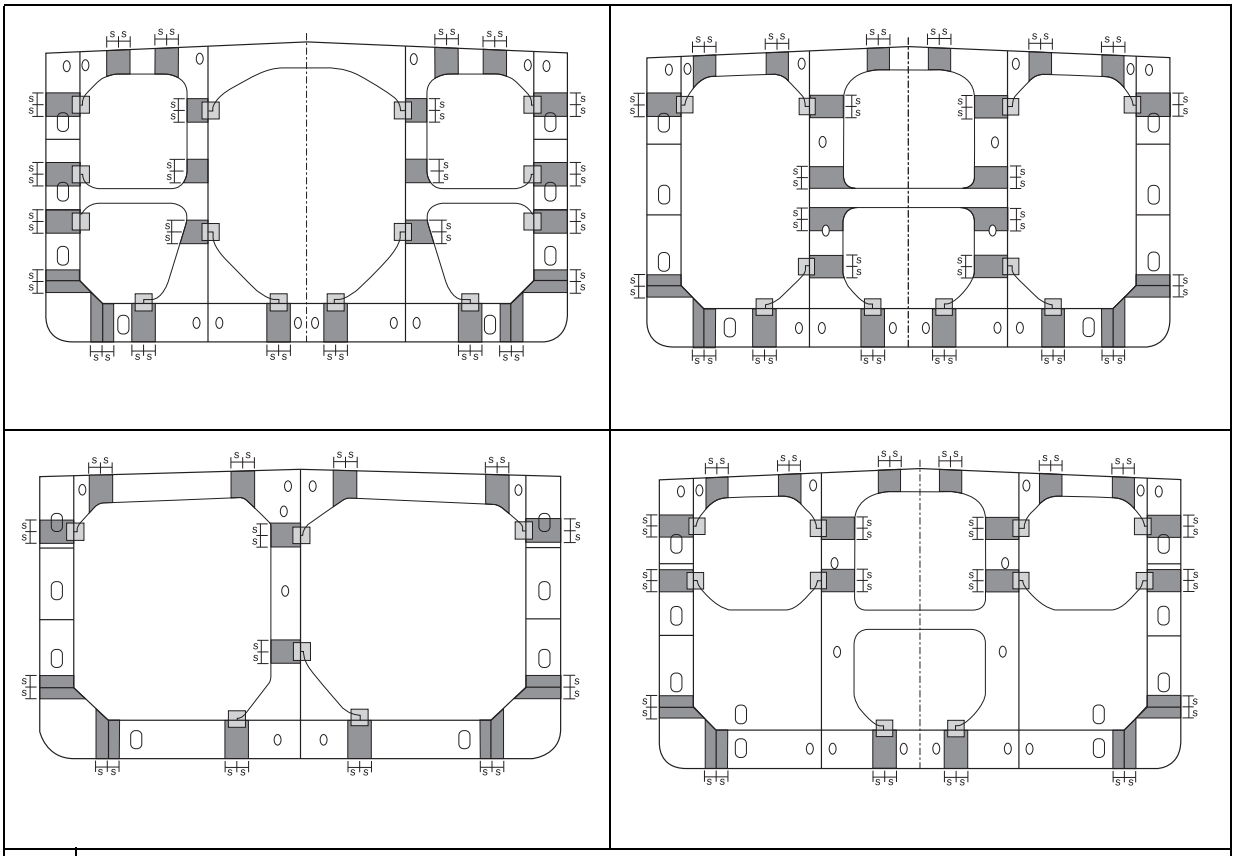

	Bracket toes	
	Openings and manholes (shaded regions)	
	Openings and manholes (unshaded regions)	Screening check to be performed for openings except if: h_o/h < 0.35 and g_o < 1.2, and each end of the opening forms a semi circle arc (i.e. radius of opening equal to $b/2$). This criterion does not apply to manholes which are to be evaluated by screening irrespective of size. h_o, h and g_o is defined in Ch 7, Sec 2, [2.4.9], b is the smallest of the length and breadth of the opening.

Table 2 : Screening areas for transverse web frame in bulk carrier

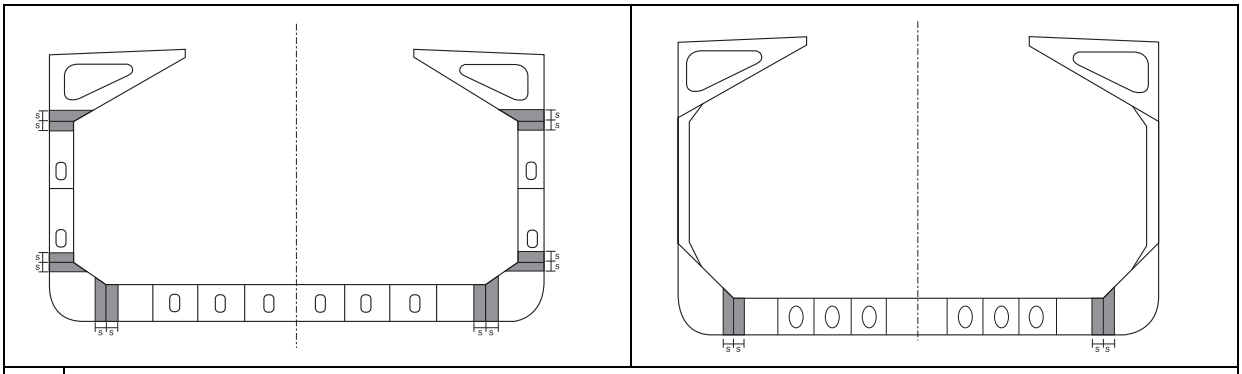

	Bracket toes	
	Openings and manholes (shaded regions)	
	Openings and manholes (unshaded regions)	Screening check to be performed for openings except if: h_o/h < 0.35 and g_o < 1.2, and each end of the opening forms a semi circle arc (i.e. radius of opening equal to $b/2$). This criterion does not apply to manholes which are to be evaluated by screening irrespective of size. h_o, h and g_o is defined in Ch 7, Sec 2, [2.4.9], b is the smallest of the length and breadth of the opening.

Table 3 : Screening areas for horizontal stringer and transverse bulkhead to double bottom connections in oil tanker

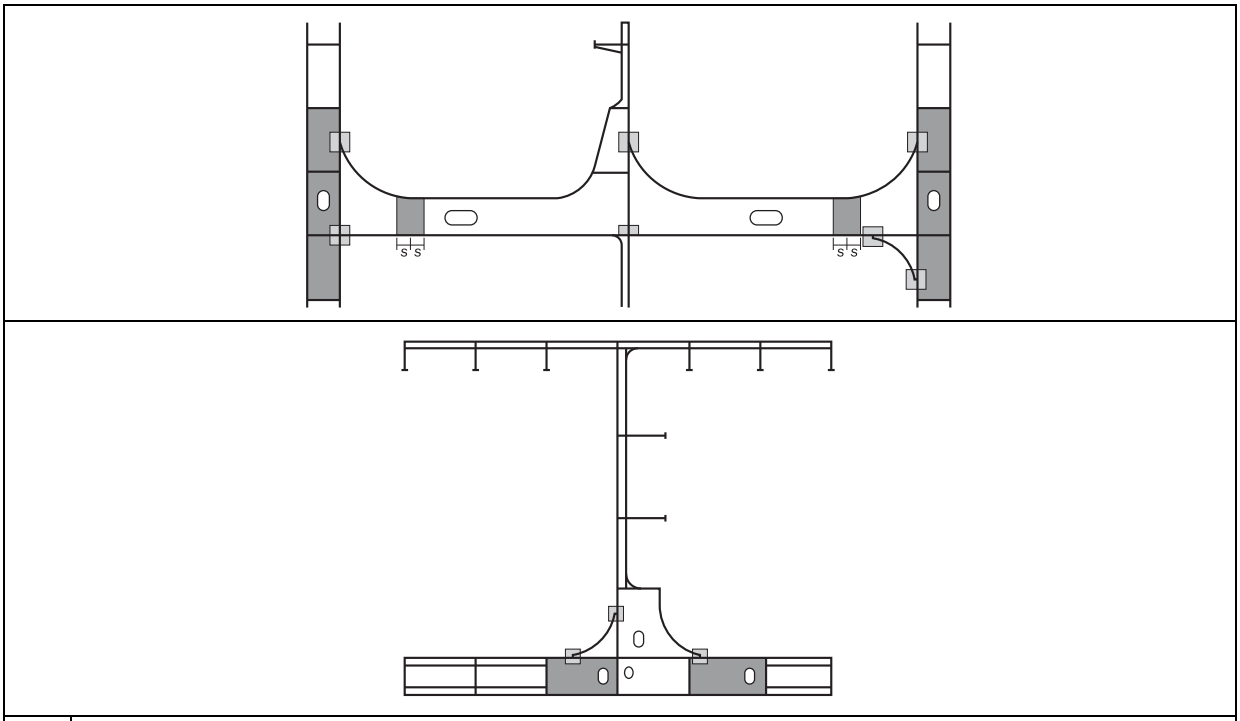

	Bracket toes and heels	
	Openings and manholes (shaded regions)	
	Openings and manholes (unshaded regions)	Screening check to be performed for openings except if: h_o/h < 0.35 and g_o < 1.2, and each end of the opening forms a semi circle arc (i.e. radius of opening equal to $b/2$). This criterion does not apply to manholes which are to be evaluated by screening irrespective of size. h_o, h and g_o is defined in Ch 7, Sec 2, [2.4.9], b is the smallest of the length and breadth of the opening.

Figure 5 : Screening areas at connections of lower stool to inner bottom and hopper tank

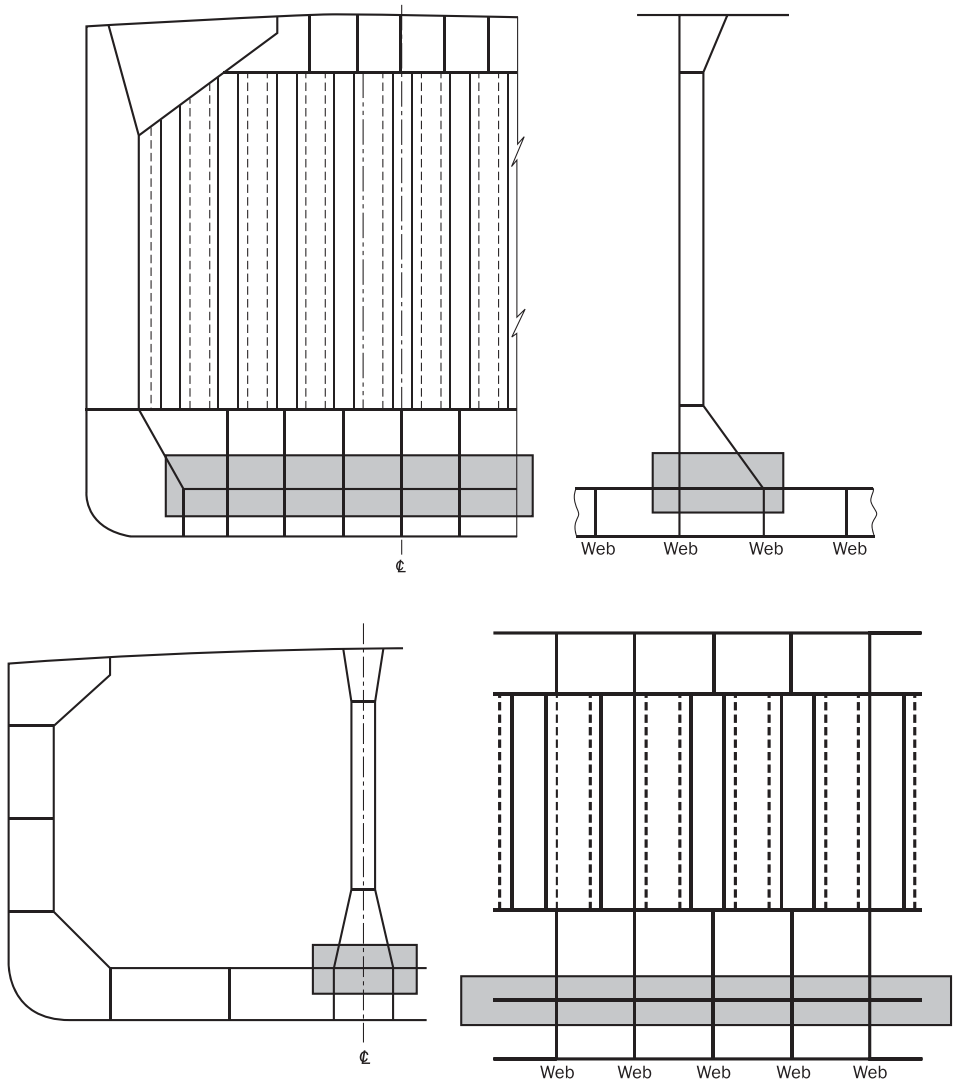

Figure 6 : Screening areas at connections of topside tank to inner side

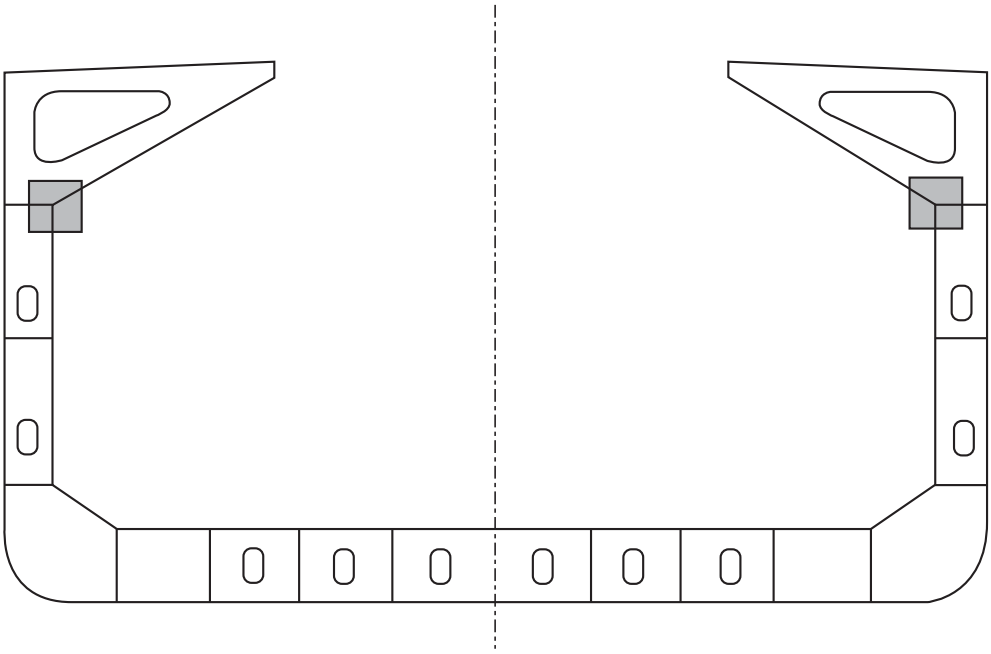

Figure 7 : Screening areas at connection of corrugation and upper supporting structure to upper stool

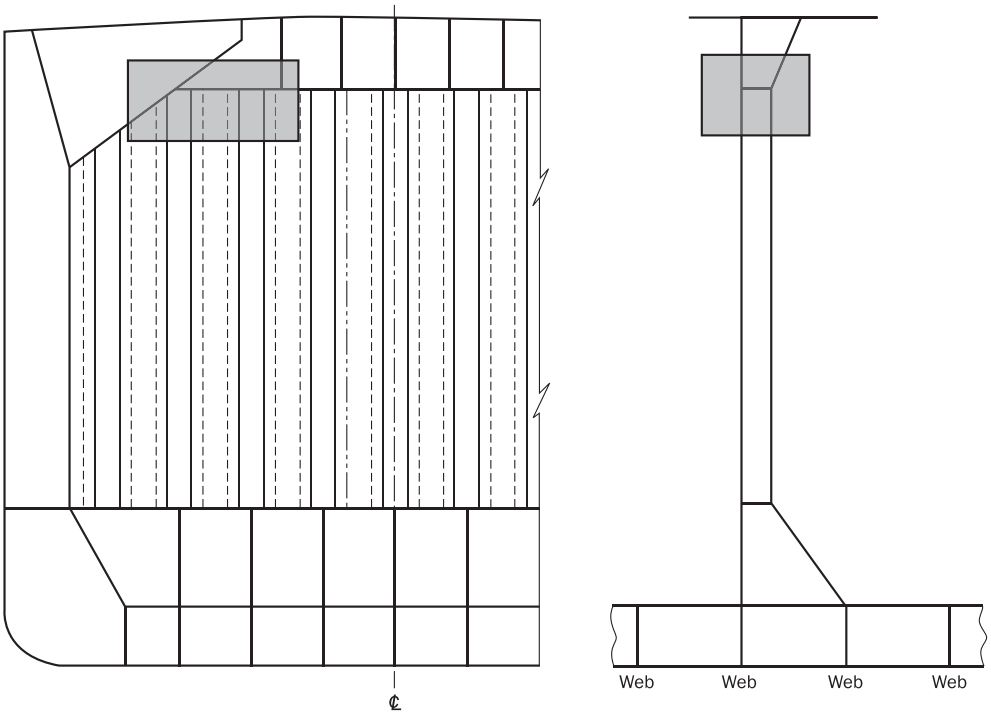

Figure 8 : Screening areas at hatch corner in bulk carrier

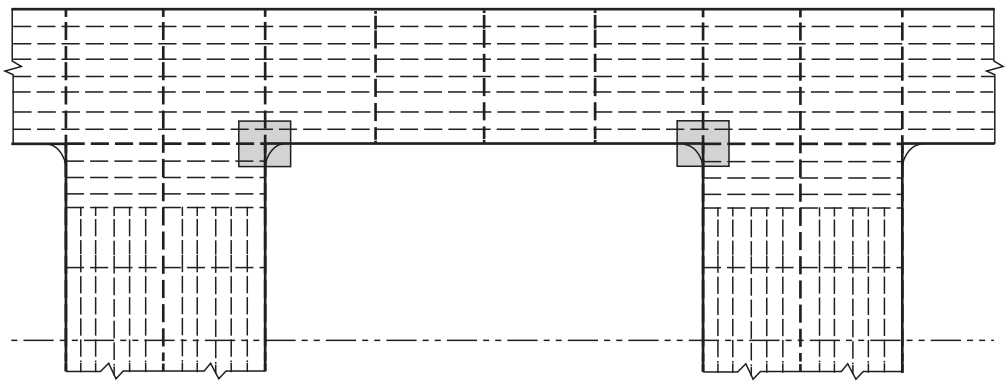

3.3 Screening criteria

3.3.1 Screening factors and permissible screening factors

The screening factors, λ_{sc}, and the permissible screening factors, λ_{scperm}, are given in Table 4 for the screening areas defined in [3.1].

Table 4 : Screening factors and permissible screening factors

Type of Details	Screening factors, λ_{sc}	Permissible screening factors, λ_{scperm}	
Within the whole cargo hold region		**S+D**	**S**
Openings for which their geometry is not required to be represented in the cargo hold model in accordance with Ch 7, Sec 2, [2.4.9] in way of webs of primary supporting members, such as transverse web frame as indicated in Table 1 and Table 2, horizontal stringers as indicated in Table 3, floors and longitudinal girders in double bottom.	Table 5	1.70	1.36
Manholes **(2)**	λ_y	0.85 λ_{yperm}	
Bracket toes on transverse web frames as indicated in Table 1 and Table 2, horizontal stringers and transverse plane bulkhead to double bottom connection or buttress structure specified in Table 3.	Table 6	1.50	1.20
Heels of transverse bulkhead horizontal stringers specified in Table 3.	Table 7	1.50	1.20
Connections of transverse lower stool to double bottom girders and longitudinal lower stool to double bottom floors as indicated in Figure 5. The connection of lower hopper to transverse lower stool structure as indicated in Figure 5. The connection of topside tank to inner side as indicated in Figure 6. The connection of corrugation and upper supporting structure to upper stool as indicated in Figure 7.	λ_y	0.75 λ_{yperm}	
Hatch corner area.	λ_y	0.95 λ_{yperm}	
Outside midship cargo hold region			
Hopper knuckle	λ_y	0.65 λ_{yperm}	
Side frame end bracket		0.85 λ_{yperm}	
Large openings **(2)**		0.85 λ_{yperm}	
Connections of corrugation to adjoining structure and bracket at the heel of horizontal stringer	$\lambda_{sc} = \frac{K_{sc} \cdot \sigma_c}{R_Y}$ **(1)**	1.50 f_f	1.20f_f

where:

λ_y : Coarse mesh yield utilisation factor, as defined in Ch 7, Sec 2, [5.2.4].

λ_{yperm} : Coarse mesh permissible yield utilisation factor, as defined in Ch 7, Sec 2, [5.2.4].

K_{sc} : Screening stress concentration factor, taken as:

$$K_{sc} = \frac{\sigma_{FM}}{\sigma_{CM}}$$

σ_{FM} : Von Mises fine mesh stress, in N/mm^2, for the considered detail calculated in the midship cargo hold region according to [2].

σ_{CM} : Von Mises coarse mesh stress, in N/mm^2, for the considered detail calculated in the midship cargo hold region according to Ch 7, Sec 2.

σ_c : Von Mises coarse mesh stress, in N/mm^2, for the area in way of considered detail.

f_f : Fatigue factor defined in [6.2.1].

(1) For each screened detail, σ_{FM} and σ_{CM} are to be taken from the corresponding elements in the same plane position.

(2) The representative element which has maximum yield utilisation factor around the manhole and the large opening is to be verified against criterion.

Table 5 : Screening factor for openings in primary supporting members

λ_{sc} : Screening factor taken as

$$\lambda_{sc} = 0.85 C_h \left(|\sigma_x + \sigma_y| + \left(2 + \left(\frac{\ell_o}{2r} \right)^{0.74} + \left(\frac{h_o}{2r} \right)^{0.74} \right) |\tau_{xy}| \right) \frac{k}{235}$$

C_h : Coefficient taken as [(2)]:

- For opening in web of PSM.

  $$C_h = 1.0 - 0.23 \left(\frac{h_o}{h} \right) + 2.12 \left(\frac{h_o}{h} \right)^2$$

- For opening in web of main bracket and buttress (see figures below).

  $C_h = 1.0$

r : Radius of opening, in mm.

h_o : Height of opening parallel to depth of web, in mm.

ℓ_o : Length of opening parallel to girder web direction, in mm.

h : Height of web of girder in way of opening, in mm.

σ_x : Axial stress in element x-direction determined from cargo hold FE analysis according to the coordinate system shown, in N/mm^2.

σ_y : Axial stress in element y-direction determined from cargo hold FE analysis according to the coordinate system shown, in N/mm^2.

τ_{xy} : Element shear stress determined from cargo hold FE analysis [(1)], in N/mm^2.

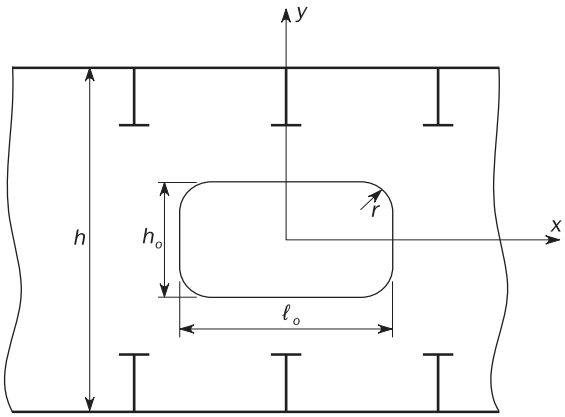

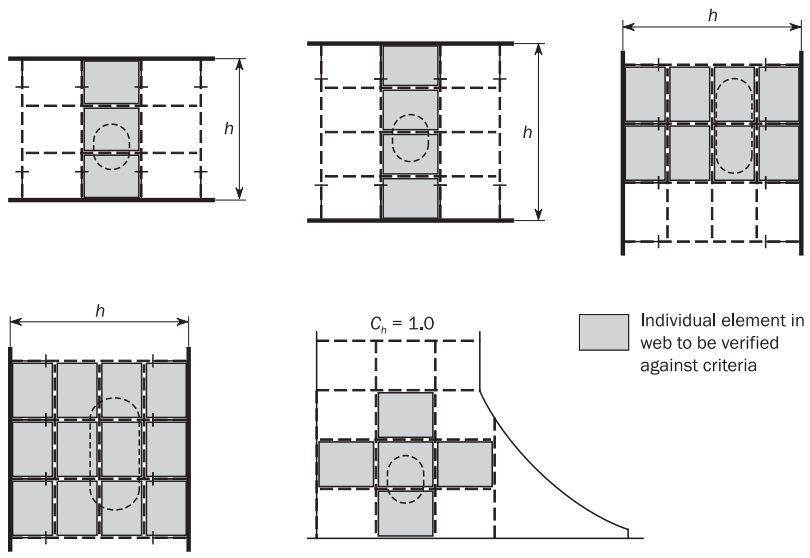

(1) The element shear stress is to be adjusted using the formula given in Ch 7, Sec 2, [5.2.6] prior to the evaluation of yield utilisation factor for verification against the screening criteria.

(2) Where the geometry of the opening is required to be modelled in accordance with Ch 7, Sec 2, [2.4.9], fine mesh FE analysis is to be carried out to determine the stress level and the screening criteria are not applicable.

Table 6 : Screening factor for bracket toes of primary supporting members

λ_{sc} : Screening factor taken as:

$$\lambda_{sc} = C_a \left(0.68 \left(\frac{b_2}{b_1}\right)^{0.5} \sigma_{vm} + 0.50 \left(\frac{A_{beam-n50}}{b_1\, t_{n50}}\right)^{0.5} |\sigma_{beam}|\right) \frac{k}{235}$$

C_a : Coefficient taken as:

$$C_a = 1.0 - 0.2 \left(\frac{R_a}{1400}\right)^2$$

b_1, b_2 : Height of shell element in way of bracket toe in cargo hold FE model, in mm.

$A_{beam-n50}$: Sectional area of beam or rod element in cargo hold FE model representing the face plate of bracket, in mm^2.

σ_{beam} : Beam or rod element axial stress determined from cargo hold FE analysis, in N/mm^2.

σ_{vm} : Von Mises stress of shell element in way of bracket toe determined from cargo hold FE analysis, in N/mm^2.

t_{n50} : Net thickness of shell element in way of bracket toe, in mm.

R_a : Leg length, in mm, not to be taken as greater than 1400 mm.

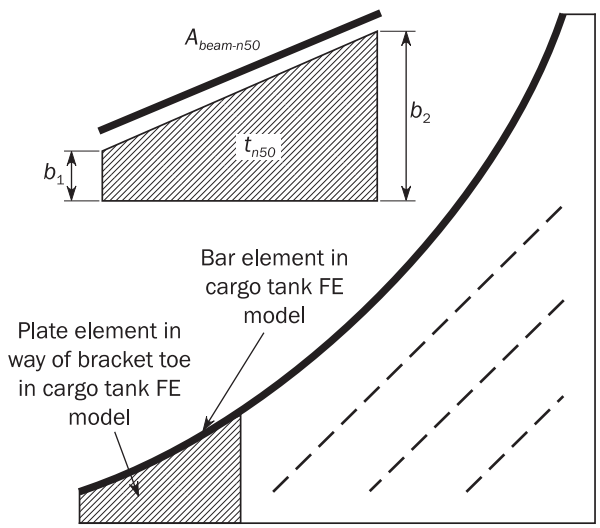

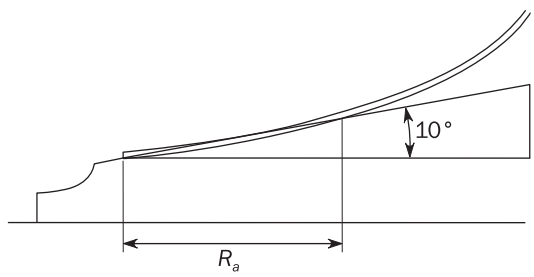

3.3.2 Screening criteria

Stresses in areas defined in [3.1], calculated for all applicable FE load combinations given in [5], are to be checked against the following screening criteria.

$\lambda_{sc} \le \lambda_{scperm}$

where:

λ_{sc} : Screening factor defined in [3.3.1]

λ_{scperm} : Permissible screening factor defined in [3.3.1]

Where the screening criteria are not met, fine mesh analysis of the corresponding structural detail is required and to be performed according to [1.1.3].

Table 7 : Screening factor for heels of transverse bulkhead horizontal stringers

λ_{sc} : Screening factor taken as:

- For heels at side horizontal girder and transverse bulkhead horizontal stringer, at the locations 1, 2 and 3 in figure below.

$$\lambda_{sc} = 1.67\ \sigma_{vm}\ \frac{k}{235}$$

- For heel at longitudinal bulkhead horizontal stringer, at the location 4 in figure below.

$$\lambda_{sc} = 3.2\ |\sigma_x|\ \frac{k}{235}$$

σ_x : Axial stress in element *x* direction determined from cargo hold FE analysis in accordance with the coordinate system shown, in N/mm^2.

σ_{vm} : Von Mises stress of shell element in way of heel determined from cargo hold FE analysis, in N/mm^2.

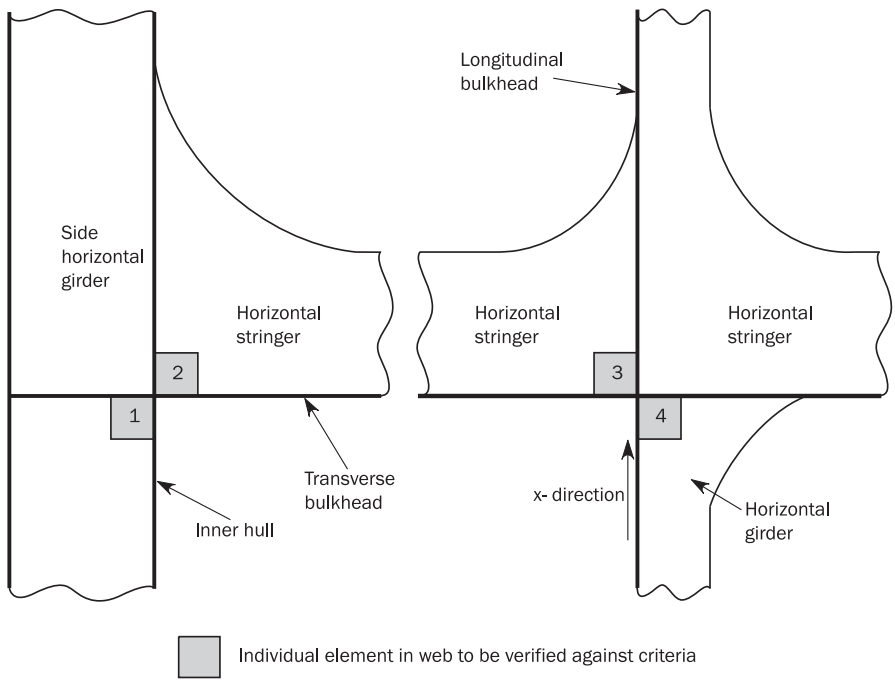

	Individual element in web to be verified against criteria.

4 STRUCTURAL MODELLING

4.1 General

4.1.1

Evaluation of detailed stresses requires the use of refined finite element mesh in way of areas of high stress. This fine mesh analysis can be carried out by fine mesh zones incorporated into the cargo hold model. Alternatively, separate local FE model with fine mesh zones in conjunction with the boundary conditions obtained from the cargo hold model may be used.

4.2 Extent of model

4.2.1

If a separate local fine mesh model is used, its extent is to be such that the calculated stresses at the areas of interest are not significantly affected by the imposed boundary conditions. The boundary of the fine mesh model is to coincide with primary supporting members in the cargo hold model, such as web frame, girders, stringers and floors.

4.3 Mesh size

4.3.1

The mesh size in the fine mesh zones is not to be greater than 50 x 50 mm.

4.3.2

The extent of the fine mesh zone is not to be less than 10 elements in all directions from the area under investigation. A smooth transition of mesh density from fine mesh zone to the boundary of the fine mesh model is to be maintained.

4.4 Elements

4.4.1

All plating within the fine mesh zone is to be represented by shell elements. The aspect ratio of elements within the fine mesh zone is to be kept as close to 1 as possible. Variation of mesh density within the fine mesh zone and the use of triangular elements are to be avoided. In all cases, the elements within the fine mesh model are to have an aspect ratio not exceeding 3. Distorted elements, with element corner angles of less than 45° or greater than 135°, are to be avoided. Stiffeners inside the fine mesh zone are to be modelled using shell elements. Stiffeners outside the fine mesh zones may be modelled using beam elements.

4.4.2

Where fine mesh analysis is required for main bracket end connections, including the end connection of hold frames of single skin bulk carriers, the fine mesh zone is to be extended at least 10 elements in all directions from the area subject to assessment, see Figure 9.

4.4.3

Where fine mesh analysis is required for an opening, the first two layers of elements around the opening are to be modelled with mesh size not greater than 50 x 50 mm. A smooth transition from the fine mesh to the coarser mesh is to be maintained. Edge stiffeners which are welded directly to the edge of an opening are to be modelled with shell elements. Web stiffeners close to an opening may be modelled using rod or beam elements located at a distance of at least 50 mm from the edge of the opening. Example of fine mesh zone around an opening is shown in Figure 10.

4.4.4

Face plates of openings, primary supporting members and associated brackets are to be modelled with at least two elements across their width on either side.

Figure 9 : Fine mesh zone around bracket toes

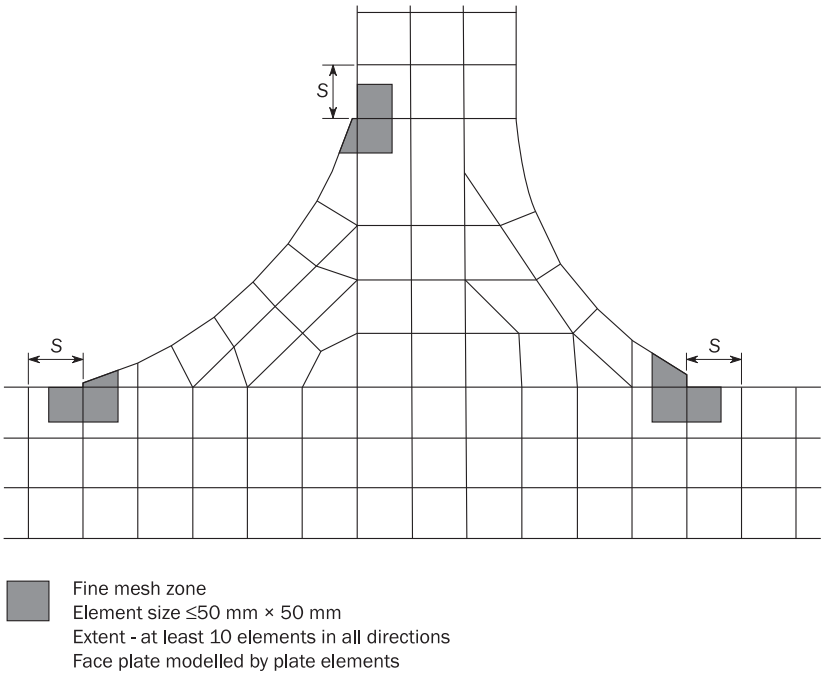

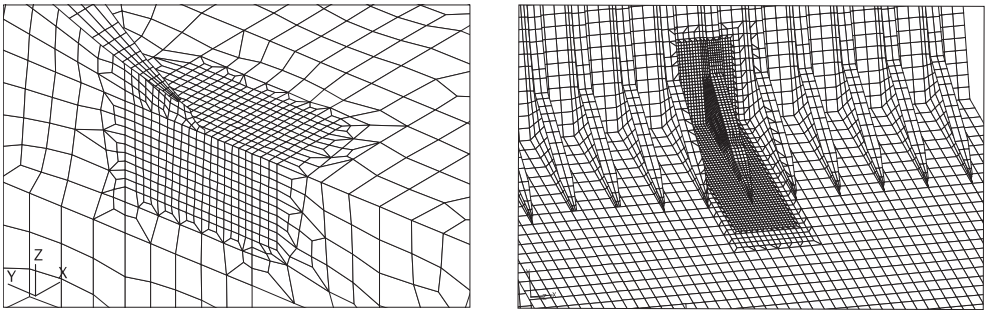

Figure 10 : Fine mesh zone around an opening

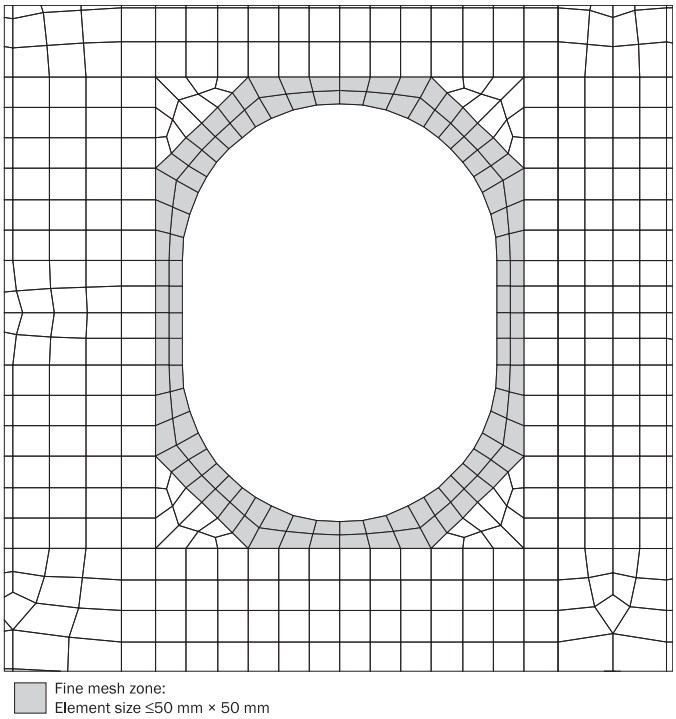

4.5 Transverse web frames

4.5.1

In addition to the requirements of [4.2] to [4.4], the modelling requirements in this sub-section are applicable to the analysis of a typical transverse web frame.

4.5.2

Where a FE sub model is used, the model is to have an extent of at least 1+1 web frame spaces, i.e. one web frame space extending either side of the transverse web frame under investigation. For bulk carriers, the web frame space is the longer space of web frames in the upper wing and the lower hopper tanks. The transverse web frames forward and aft of the web frame under investigation need not be included in the sub model.

4.5.3

The full depth and full breadth of the ship are to be modelled, see Figure 11.

Figure 12 shows a close up view of the finite element mesh at the lower part of the vertical web and backing brackets.

Figure 11 : Example of extent of local model for fine mesh analysis of web frame bracket connections and openings

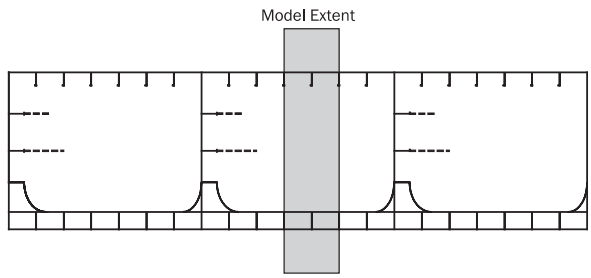

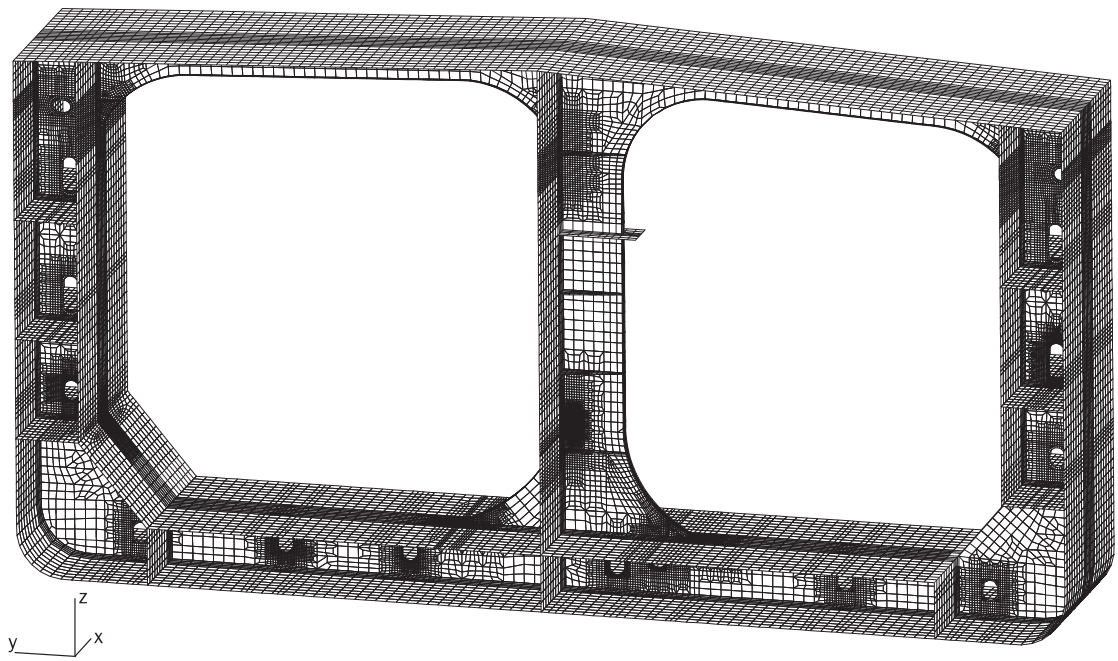

Figure 12 : Close-up view of finite element mesh at the lower part of a transverse web frame

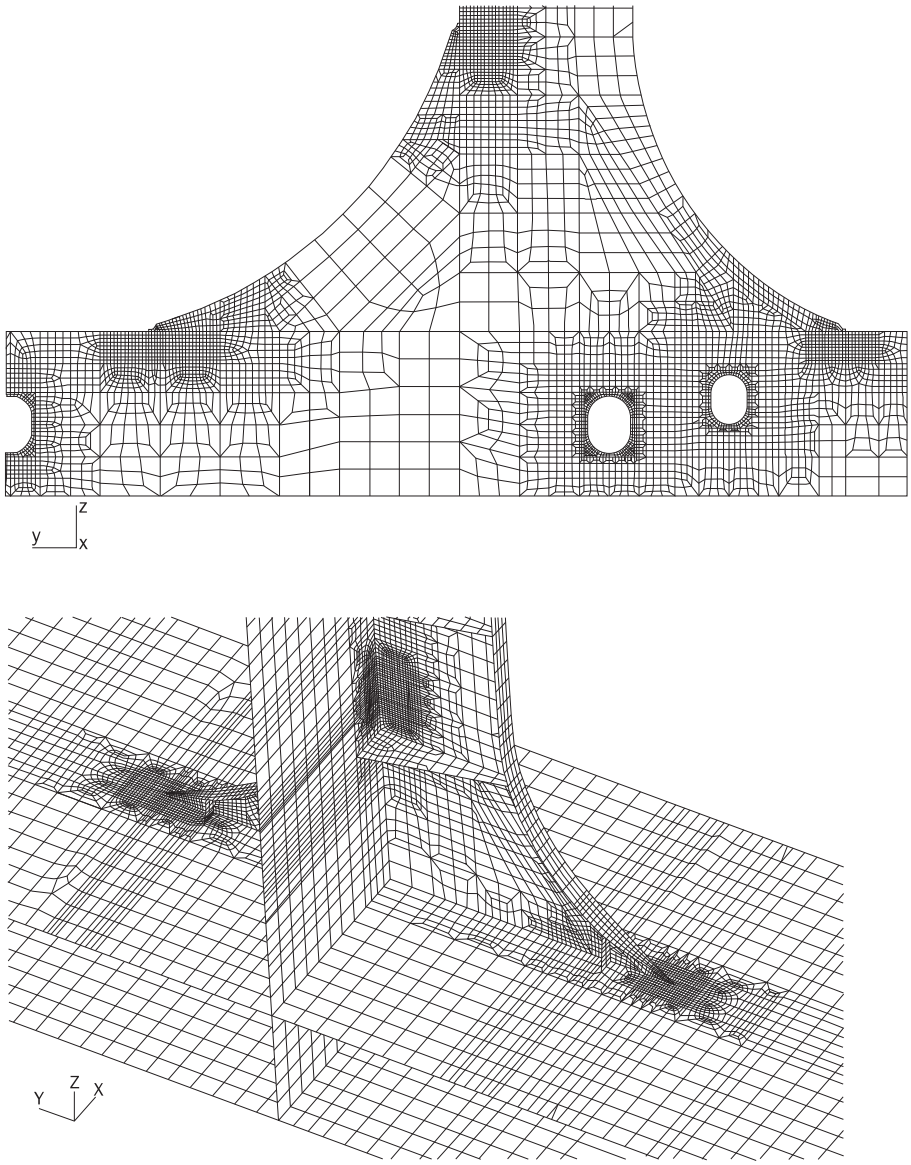

4.6 Transverse bulkhead stringers, buttress and adjacent web frame

4.6.1

In addition to the requirements of [4.2] to [4.4], the modelling requirements in this sub-section are applicable to the analysis of transverse bulkhead structures and adjacent web frame.

4.6.2

Due to the structural interaction among the transverse bulkhead, horizontal stringers, web frames, deck and double bottom, it is recommended that the FE local model represents a full section of the hull. Longitudinally, the ends of the model should be extended at least one web frame space beyond the areas that require investigation, see Figure 13.

4.6.3

Alternatively, it is acceptable to use a number of local models, as shown in Figure 14, to analyse different parts of the structure. For the analysis of the transverse bulkhead horizontal stringers the full breadth of the ship are to be modelled. For the analysis of buttress structure, the local model width should be at least 4+4 longitudinal spaces, i.e. four longitudinal spaces at each side of the buttress.

Figure 13 : Example of local model for fine mesh analysis of transverse bulkhead and adjacent structure

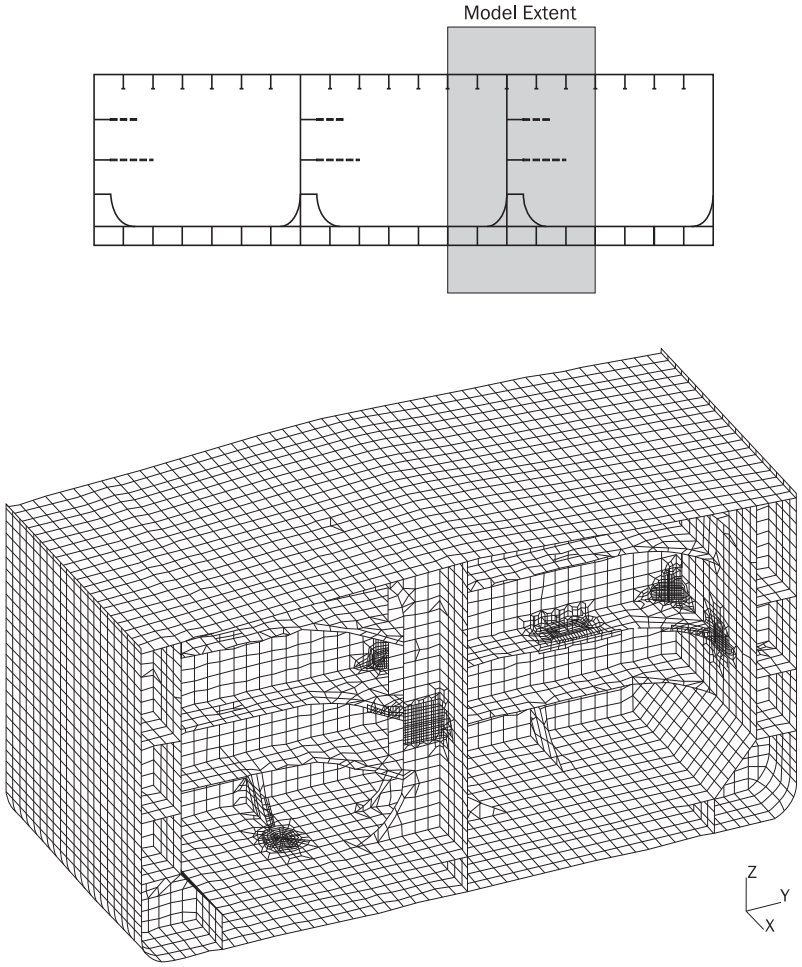

Figure 14 : Example of local analysis of transverse bulkhead structure using local models

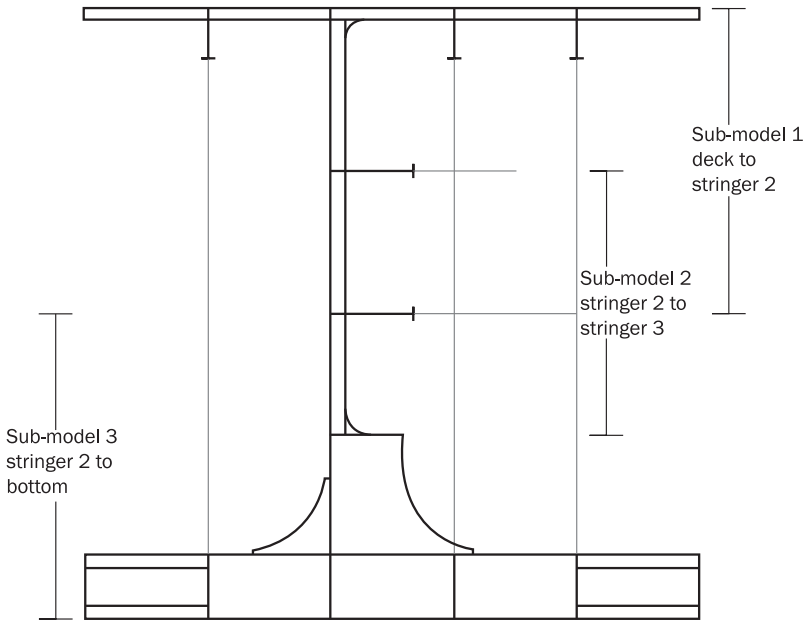

4.6.4

Figure 15 shows the finite element mesh on a transverse bulkhead horizontal stringer. Figure 16 shows the local model for the analysis of buttress connections to transverse bulkhead and double bottom structure, and openings.

Figure 15 : Example of finite element mesh on transverse bulkhead horizontal stringer

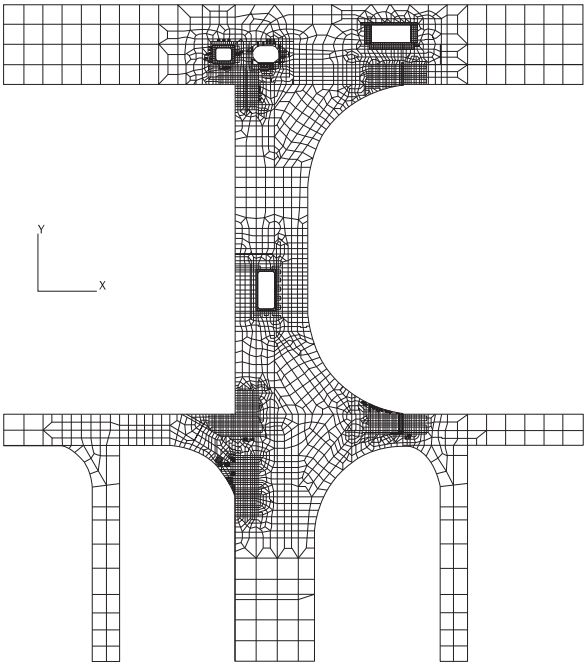

Figure 16 : Example of local model for the analysis of buttress connections to bulkhead and double bottom structure, showing port half of model

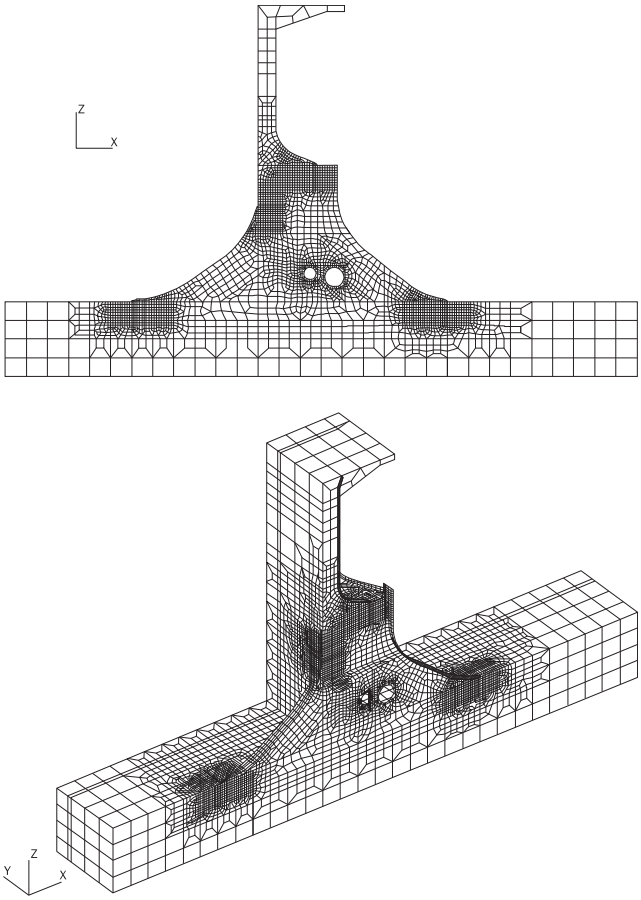

4.7 Deck, double bottom longitudinal and adjoining transverse bulkhead vertical stiffeners

4.7.1

In addition to the requirements of [4.2] to [4.4], the modelling requirements in this sub-section are applicable specifically to the analysis of longitudinal and vertical stiffener end connections and attached web stiffeners.

4.7.2

Where a local FE model is used, each end of the model is to be extended longitudinally at least two web frame spaces from the areas under investigation. The model width is to be at least 2+2 longitudinal spaces. Figure 17 shows the longitudinal extent of the local model for the analysis of deck and double bottom longitudinal stiffeners and adjoining transverse bulkhead vertical stiffener.

4.7.3

The web of the longitudinal stiffeners outside of the fine mesh zone should be represented by at least 3 shell elements across its depth. Similar size elements should be used to represent the plating of the bottom shell and inner bottom. The flange of the longitudinal stiffeners and face plate of brackets should be modelled with at least two shell elements across its width at one side.

4.7.4

The mesh size and extent of the fine mesh zone is to be in accordance with [4.3.1], see also Figure 17.

4.8 Corrugated bulkheads

4.8.1

In addition to the requirements of [4.2] to [4.4], the modelling requirements in this sub-article are applicable to the analysis of connections of corrugated bulkheads to lower stool and the connection between lower stool and inner bottom.

4.8.2

The minimum extents of the local model are as follows, see also Figure 18:

a) Vertically, the model is to be extended from the bottom of the ship to a level at least 2 m above the corrugation and lower stool connection. The upper boundary of the local model is to coincide with the horizontal mesh line of the cargo hold FE model for the purpose of applying boundary displacements, see [4.2].

b) For transverse corrugated bulkheads, the local model is to be extended transversely to the nearest diaphragm web in the lower stool on each side of the fine mesh zone (i.e. the local model covers two lower stool transverse web/diaphragm spaces). The end diaphragms need not be modelled.

c) For the longitudinal corrugated bulkheads, the local model is to be extended to the nearest web frame on each side of the fine mesh zone (i.e. the local model covers two frame spaces). The end web frames need not be modelled.

d) For the corrugation and lower stool connection located close to the intersection of transverse and longitudinal corrugated bulkheads, such as for product tanker, the local model is to cover the structure between the diaphragms (in transverse direction) and web frames (in longitudinal direction) closest to the detail, whichever is relevant. In addition the local model is to be extended at least one diaphragm/web frame outside the intersection between the transverse stool and the longitudinal stool.

e) For lower stool to inner bottom connection, the connection between inner bottom, lower stool plate, diaphragm and double bottom girder, where applicable, is the centre of the fine mesh zone.

Figure 17 : Example of local model for fine mesh analysis of end connections and web stiffeners of deck and double bottom longitudinals

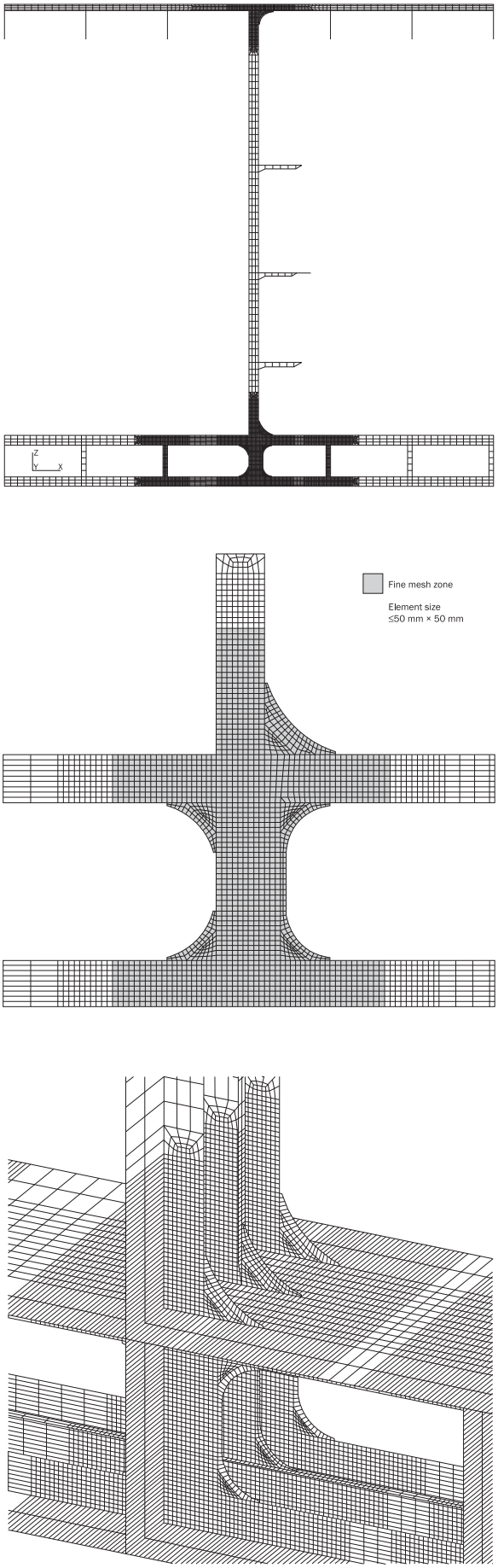

4.8.3

For corrugation connection, the fine mesh zone is to cover at least the corrugation flange under investigation, the adjacent corrugation webs and a further extension of 500 mm from each end of the corrugation web, i.e. the fine mesh zone covers at least four corrugation knuckles, see Figure 18 and Figure 19. The mesh size within the fine mesh zone is not to be greater than 50 x 50 mm.

Figure 18 : Extent of local model and fine mesh zone for the analysis of corrugated bulkhead connection to lower stool and inner bottom

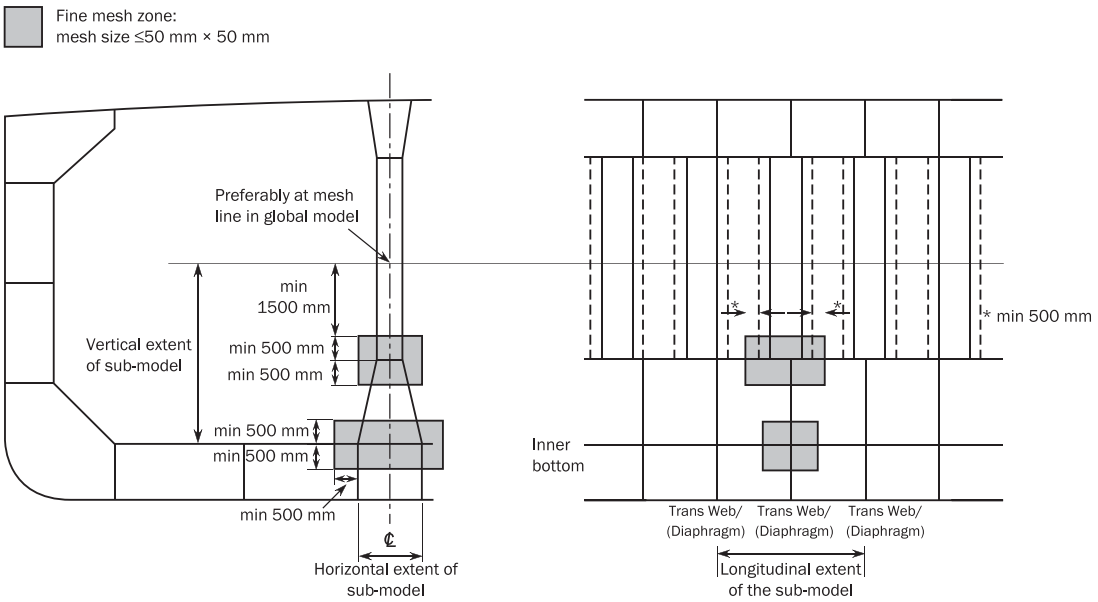

Above figures show extent of local model and fine mesh zone on longitudinal corrugated bulkhead connection to lower stool. Similar extent applies to transverse corrugated bulkhead.

The model extents shown above are the minimum extents.

Figure 19 : Example of partial local model for the analysis of connection of corrugated bulkhead to lower stool

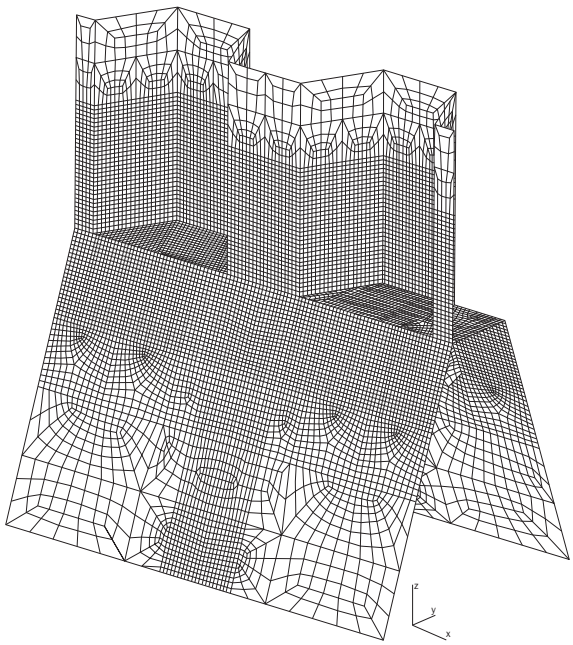

4.8.4

Diaphragm webs, brackets inside the lower stool and all stiffeners on the stool plate and diaphragm are to be modelled at their actual positions within the extent of the local model. Shell elements are to be used for modelling of diaphragm, web and flange of vertically orientated stiffeners, and brackets in the fine mesh zone.

4.8.5

Horizontally orientated stiffeners within the fine mesh zone are to be represented by either shell or beam elements.

4.8.6

Figure 19 shows the details of finite element local model for the fine mesh analysis of longitudinal bulkhead to lower stool connection.

4.8.7

Figure 20 shows the details finite element local model for the fine mesh analysis of lower stool to inner bottom connection.

Figure 20 : Example of partial local model for the analysis of connection of lower stool to inner bottom

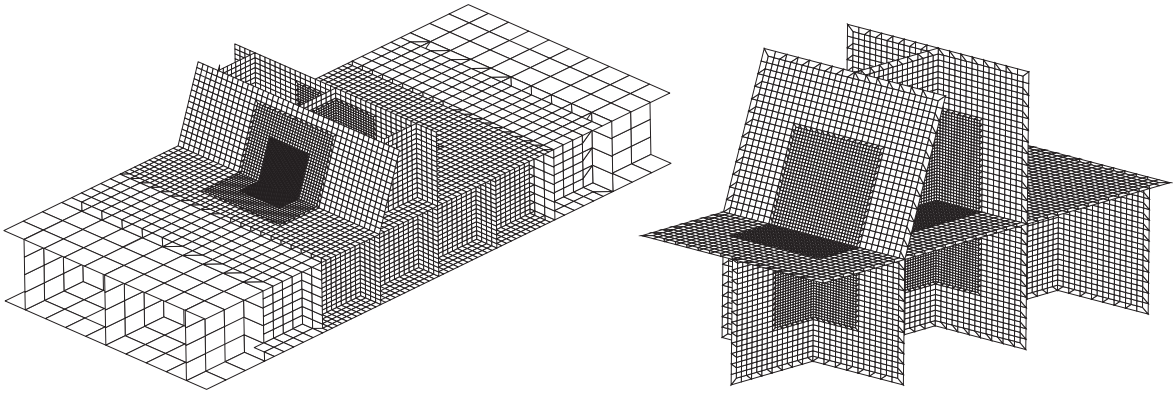

4.9 Hatch corner structures

4.9.1

In addition to the requirements of [4.2] to [4.4], the modelling requirements in this sub-article are applicable to the analysis of hatch corner structures.

4.9.2

The high stress areas, such as the hatch coaming end bracket, the hatch corner and the hatch end beam connection, need to be analysed by fine mesh model. The fine mesh zones should cover these areas, see Figure 21.

Figure 21 : Example of local model for the analysis of hatch opening structures

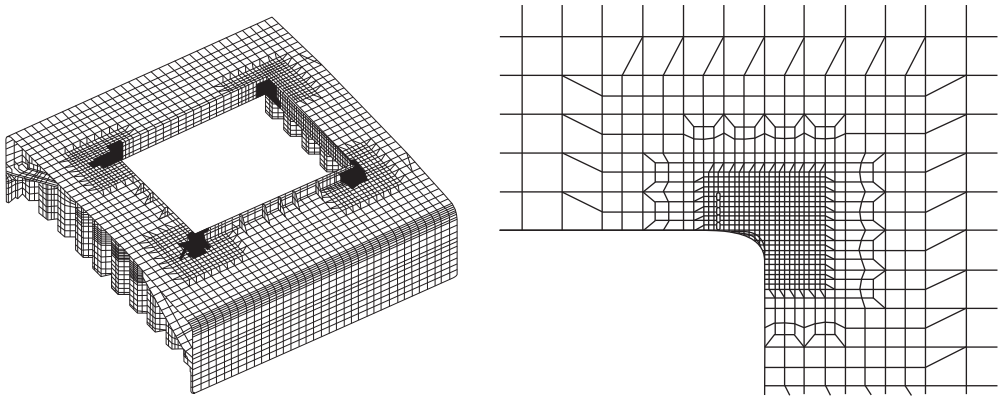

5 FE LOAD COMBINATIONS

5.1 General

5.1.1

The fine mesh detailed stress analysis is to be carried out for all FE load combinations applied to the corresponding cargo hold analysis.

5.2 Application of loads and boundary conditions

5.2.1 General

Where a separate local model is used for the fine mesh detailed stress analysis, the nodal displacements from the cargo tank model are to be applied to the corresponding boundary nodes on the local model as prescribed displacements. Alternatively, equivalent nodal forces from the cargo tank model may be applied to the boundary nodes.

Where there are nodes on the local model boundaries which are not coincident with the nodal points on the cargo tank model, it is acceptable to impose prescribed displacements on these nodes using multi-point constraints. The use of linear multi-point constraint equations connecting two neighbouring coincident nodes is considered sufficient.

All local loads, including any loads applied for hull girder bending moment and/or shear force adjustments, in way of the structure represented by the separate local finite element model are to be applied to the model.

6 ANALYSIS CRITERIA

6.1 Stress assessment

6.1.1 General

Stress assessment of the fine mesh analysis is to be carried out for the FE load combinations specified in Ch 4, Sec 8.

6.1.2 Reference stress

Reference stress is von Mises stress, σ_{vm}, which is to be calculated based on the membrane normal and shear stresses of the shell element evaluated at the element centroid. The stresses are to be evaluated at the mid plane of the element.

6.1.3 Permissible stress

The maximum permissible stresses are based on the mesh size of 50 x 50 mm as specified in [4.1] to [4.4]. Where a smaller mesh size is used, an area weighted von Mises stress calculated over an area equal to the specified mesh size may be used to compare with the permissible stresses. The averaging is to be based only on elements with their entire boundary located within the desired area. The average stress is to be calculated based on stresses at element centroid; stress values obtained by interpolation and/or extrapolation are not to be used. Stress averaging is not to be carried across structural discontinuities and abutting structure.

6.2 Acceptance criteria

6.2.1

Verification of stress results against the acceptance criteria is to be carried out in accordance with [6.1].

The structural assessment is to demonstrate that the stress complies with the following criteria:

$\lambda_f \leq \lambda_{fperm}$

where:

λ_f : Fine mesh yield utilisation factor.

$$\lambda_f = \frac{\sigma_{vm}}{R_Y} \quad \text{for shell elements in general}$$

$$\lambda_f = \frac{|\sigma_{axial}|}{R_Y} \quad \text{for rod or beam elements in general}$$

σ_{vm} : Von Mises stress, in N/mm^2.

σ_{axial} : Axial stress in rod element, in N/mm^2.

λ_{fperm} : Permissible fine mesh utilisation factor, taken as:

- Element not adjacent to weld:
  - λ_{fperm} = 1.70 f_f for S+D
  - λ_{fperm} = 1.36 f_f for S
- Element adjacent to weld:
  - λ_{fperm} = 1.50 f_f for S+D
  - λ_{fperm} = 1.20 f_f for S

f_f : Fatigue factor, taken as:

- f_f = 1.0 in general, including the free edge of base material,
- f_f = 1.2 for details assessed by very fine mesh analysis complying with the fatigue assessment criteria given in Ch 9, Sec 2.

Note 1: The maximum permissible stresses are based on the mesh size of 50 x 50 mm. Where a smaller mesh size is used, an average von Mises stress calculated in accordance with [6.1] over an area equal to the specified mesh size may be used to compare with the permissible stresses.

Note 2: Average von Mises stress is to be calculated based on weighted average against element areas:

$$\sigma_{vm-av} = \frac{\sum_1^n A_i \, \sigma_{vm-i}}{\sum_1^n A_i}$$

where:

σ_{vm-av} is the average von Mises stress.

Note 3: Stress averaging is not to be carried across structural discontinuities and abutting structure.

6.2.2 Lower stool not fitted to a transverse or longitudinal corrugated bulkhead

Where a lower stool is not fitted to a transverse or longitudinal corrugated bulkhead, the permissible stresses given in [6.2.1] are to be reduced by 10% for the areas under investigation by fine mesh analysis.

PART 1 CHAPTER 8

BUCKLING

Table of Contents

SECTION 1
General
1 Introduction
2 Application
3 Definitions
SECTION 2
Slenderness Requirements
1 Structural Elements
2 Plates
3 Stiffeners
4 Primary Supporting Members
5 Brackets
6 Other Structures
SECTION 3
Prescriptive Buckling Requirements
1 General
2 Hull Girder Stress
3 Buckling Criteria
SECTION 4
Buckling Requirements for Direct Strength Analysis
1 General
2 Stiffened and Unstiffened Panels
3 Corrugated Bulkhead
4 Vertically Stiffened Side Shell of Single Side Skin Bulk Carrier
5 Struts, Pillars and Cross Ties
SECTION 5
Buckling Capacity
1 General
2 Buckling Capacity of Plates and Stiffeners
3 Buckling capacity of other structures
APPENDIX 1
Stress Based Reference Stresses
1 Stress based method
2 Reference Stresses

SECTION 1
GENERAL

1 INTRODUCTION

1.1 Assumption

1.1.1

This chapter contains the strength criteria for buckling and ultimate strength of local supporting members, primary supporting members and other structures such as pillars, corrugated bulkheads and brackets. These criteria are to be applied as specified in Ch 6 for hull local scantlings and in Ch 7 for direct strength analysis.

1.1.2

For each structural member, the characteristic buckling strength is to be taken as the most unfavourable/critical buckling failure mode.

1.1.3

Unless otherwise specified, the scantling requirements of structural members in this chapter are based on net scantling obtained by removing t_c from the gross offered thickness, where t_c is defined in Ch 3, Sec 3.

1.1.4

In this chapter, compressive and shear stresses are to be taken as positive, tension stresses are to be taken as negative.

2 APPLICATION

2.1 Scope

2.1.1

The buckling checks are to be performed according to:

- Ch 8, Sec 2 for the slenderness requirements of plates, longitudinal and transverse stiffeners, primary supporting members and brackets.
- Ch 8, Sec 3 for the prescriptive buckling requirements of plates, longitudinal and transverse stiffeners, primary supporting members and other structures.
- Ch 8, Sec 4 for the buckling requirements of the FE analysis for the plates, stiffened panels and other structures.
- Ch 8, Sec 5 for the buckling capacity of prescriptive and FE buckling requirements.

2.1.2 Stiffener

The buckling check of the stiffeners referred to in this Chapter is applicable to the stiffener fitted along the long edge of the buckling panel.

2.1.3 Enlarged stiffener

Enlarged stiffeners, with or without web stiffening, used for Permanent Means of Access (PMA) are to comply with the following requirements:

a) Slenderness requirements for primary supporting members as follows:
   - For enlarged stiffener web, see item (a) of Ch 8, Sec 2, [4.1.1].
   - For enlarged stiffener flange, see item (b) of Ch 8, Sec 2, [4.1.1] and Ch 8, Sec 2, [5.1].
   - For stiffeners fitted on enlarged stiffener web, see Ch 8, Sec 2, [3.1.1] and Ch 8, Sec 2, [3.1.3].

b) Buckling strength of prescriptive requirements as follows:
   - For enlarged stiffener web, see Ch 8, Sec 3, [3.2].
   - For stiffeners fitted on enlarged stiffener web, see Ch 8, Sec 3, [3.1] and Ch 8, Sec 3, [3.3].

c) All structural elements used for PMA are to be complied with for the buckling requirements of the FE analysis in Ch 8, Sec 4 when applicable.

d) Buckling strength of longitudinal PMA platforms without stiffeners fitted on enlarged stiffener web is to be checked using the criteria for local supporting members in Ch 8, Sec 3, [3.1] and Ch 8, Sec 3, [3.3].

3 DEFINITIONS

3.1 General

3.1.1 Buckling definition

'Buckling' is used as a generic term to describe the strength of structures, generally under in-plane compressions and/or shear and lateral load. The buckling strength or capacity can take into account the internal redistribution of loads depending on the load situation, slenderness and type of structure.

3.1.2 Buckling capacity

Buckling capacity based on this principle gives a lower bound estimate of ultimate capacity, or the maximum load the panel can carry without suffering major permanent set.

Buckling capacity assessment utilises the positive elastic post-buckling effect for plates and accounts for load redistribution between the structural components, such as between plating and stiffeners. For slender structures, the capacity calculated using this method is typically higher than the ideal elastic buckling stress (minimum Eigen value). Accepting elastic buckling of structural components in slender stiffened panels implies that large elastic deflections and reduced in-plane stiffness will occur at higher buckling utilisation levels.

3.1.3 Assessment methods

The buckling assessment is carried out according to one of the two methods taking into account different boundary condition types:

- Method A: All the edges of the elementary plate panel are forced to remain straight (but free to move in the in-plane directions) due to the surrounding structure/neighbouring plates.
- Method B: The edges of the elementary plate panel are not forced to remain straight due to low in-plane stiffness at the edges and/or no surrounding structure/neighbouring plates.

3.2 Buckling utilisation factor

3.2.1

The utilisation factor, η, is defined as the ratio between the applied loads and the corresponding ultimate capacity or buckling strength.

3.2.2

For combined loads, the utilisation factor, η_{act}, is to be defined as the ratio of the applied equivalent stress and the corresponding buckling capacity, as shown in Figure 1, and is to be taken as:

$$\eta_{act} = \frac{W_{act}}{W_u} = \frac{1}{\gamma_c}$$

where:

W_{act} : Applied equivalent stress, in N/mm^2:

$$W_{act} = \sqrt{\sigma_x^2 + \sigma_y^2 + \tau^2} \quad \text{for plate}$$

$$W_{act} = \sigma_a + \sigma_b + \sigma_w \quad \text{for stiffener}$$

W_u : Equivalent buckling capacity, in N/mm^2, to be taken as:

$$W_u = \sqrt{\sigma_{cx}^2 + \sigma_{cy}^2 + \tau_c^2} \quad \text{for plate}$$

$$W_u = \frac{R_{eH-S}}{S} \quad \text{for stiffener}$$

γ_c : Stress multiplier factor at failure.

For each typical failure mode, the corresponding capacity of the panel is calculated by applying the actual stress combination and then increasing or decreasing the stresses proportionally until collapse.

Figure 1 illustrates the buckling capacity and the buckling utilisation factor of a structural member subject to σ_x and σ_y stresses.

Figure 1 : Example of buckling capacity and buckling utilisation factor

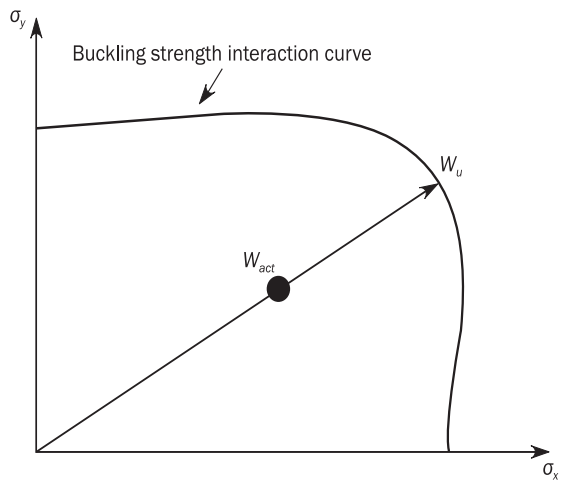

3.3 Allowable buckling utilisation factor

3.3.1 General structural elements

The allowable buckling utilisation factor is defined in Table 1.

Table 1 : Allowable buckling utilisation factor

Structural component	η_{all}, Allowable buckling utilisation factor
Plates and stiffeners Stiffened and unstiffened panels Vertically stiffened side shell plating of single side skin bulk carrier Web plate in ways of openings	1.00 for load combination: S+D 0.80 for load combination: S
Struts, pillars and cross ties	0.75 for load combination: S+D 0.65 for load combination: S
Corrugation of vertically corrugated bulkheads with lower stool and horizontally corrugated bulkhead, under lateral pressure from liquid loads, for shell elements only. Supporting structure in way of lower end of corrugated bulkheads without lower stool.	0.90 for load combination: S+D 0.72 for load combination: S
Corrugation of vertically corrugated bulkheads without lower stool under lateral pressure from liquid loads, for shell elements only.	0.81 for load combination: S+D 0.65 for load combination: S
Note 1: Supporting structure for a transverse corrugated bulkhead refers to the structure in longitudinal direction within half a web frame space forward and aft of the bulkhead, and within a vertical extent equal to the corrugation depth. Note 2: Supporting structure for a longitudinal corrugated bulkhead refers to the structure in transverse direction within three longitudinal stiffener spacings from each side of the bulkhead, and within a vertical extent equal to the corrugation depth.	

3.4 Buckling acceptance criteria

3.4.1

A structural member is considered to have an acceptable buckling strength if it satisfies the following criterion:

$\eta_{act} \leq \eta_{all}$

where:

η_{act} : Buckling utilisation factor based on the applied stress, defined in [3.2.2].

η_{all} : Allowable buckling utilisation factor as defined in [3.3].

SECTION 2
SLENDERNESS REQUIREMENTS

SYMBOLS

For symbols not defined in this section, refer to Ch 1, Sec 4.

$b_{f\text{-}out}$: Maximum distance, in mm, from mid thickness of the web to the flange edge, as shown in Figure 1.

h_w : Depth of stiffener web, in mm, as shown in Figure 1.

ℓ_b : Effective length of edge of bracket, in mm, as defined in Table 3.

s_{eff} : Effective width of attached plate of stiffener, in mm, taken equal to:

$s_{eff} = 0.8\ s$

t_f : Net flange thickness, in mm.

t_p : Net thickness of plate, in mm.

t_w : Net web thickness, in mm.

1 STRUCTURAL ELEMENTS

1.1 General

1.1.1

All structural elements are to comply with the applicable slenderness and proportion requirements given in [2] to [4].

2 PLATES

2.1 Net thickness of plate panels

2.1.1

The net thickness of plate panels is to satisfy the following criteria:

$$t_p \geq \frac{b}{C}\sqrt{\frac{R_{eH}}{235}}$$

where:

C : Slenderness coefficient taken as:

$C = 100$ for hull envelope and cargo and tank boundaries.

$C = 125$ for other structures.

R_{eH} : Specified minimum yield stress of the plate material, in N/mm^2.
A lower specified minimum yield stress may be used in this slenderness criterion provided the requirements specified in Sec 3 and Sec 4 are satisfied for the strake assumed in the same lower specified minimum yield stress value.

This requirement does not apply to the bilge plates within the cylindrical part of the ship and radius gunwale.

3 STIFFENERS

3.1 Proportions of stiffeners

3.1.1 Net thickness of all stiffener types

The net thickness of stiffeners is to satisfy the following criteria:

a) Stiffener web plate:

$$t_w \geq \frac{h_w}{C_w}\sqrt{\frac{R_{eH}}{235}}$$

b) Flange:

$$t_f \geq \frac{b_{f-out}}{C_f}\sqrt{\frac{R_{eH}}{235}}$$

where:

C_w, C_f : Slenderness coefficients given in Table 1.

Figure 1 : Stiffener scantling parameters

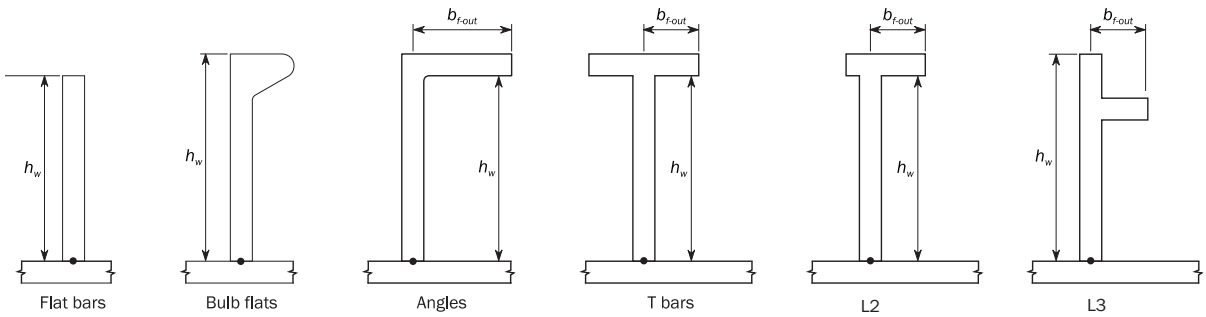

Table 1 : Slenderness coefficients

Type of Stiffener	C_w	C_f
Angle, L2 and L3 bars	75	12
T-bars	75	12
Bulb bars	45	-
Flat bars	22	-

3.1.2 Net dimensions of angle and T-bars

The total flange breadth b_f in mm, for angle and T-bars is to satisfy the following criterion:

$$b_f \geq 0.25 h_w$$

3.1.3 Bending stiffness of stiffeners

The net moment of inertia, in cm^4, of the stiffener with the effective width of attached plate, about the neutral axis parallel to the attached plating, is not to be less than the minimum value given by:

$$I_{st} \geq C\,\ell^2\,A_{eff}\,\frac{R_{eH}}{235}$$

where:

A_{eff} : Net sectional area of stiffener including effective attached plate, s_{eff}, in cm^2.

R_{eH} : Specified minimum yield stress of the material of the attached plate, in N/mm^2.

C : Slenderness coefficient taken as:

C = 1.43 for longitudinal stiffeners including sniped stiffeners.

C = 0.72 for other stiffeners.

4 PRIMARY SUPPORTING MEMBERS

4.1 Proportions and stiffness

4.1.1 Proportions of web plate and flange

The net thicknesses of the web plates and flanges of primary supporting members are to satisfy the following criteria:

a) Web plate:

$$t_w \geq \frac{s_w}{C_w}\sqrt{\frac{R_{eH}}{235}}$$

b) Flange:

$$t_f \geq \frac{b_{f-out}}{C_f}\sqrt{\frac{R_{eH}}{235}}$$

where:

s_w : Plate breadth, in mm, taken as the spacing of the web stiffeners.

C_w : Slenderness coefficient for the web plate taken as:

C_w = 100

C_f : Slenderness coefficient for the flange taken as:

C_f = 12

4.1.2 Deck transverse primary supporting members

The net moment of inertia for deck transverse primary supporting members, $I_{psm\text{-}n50}$, in cm^4, supporting deck longitudinals subject to axial compressive hull girder stress, is to comply, within its central half of the bending span, with the following criterion:

$$I_{psm-n50} \geq 300\,\frac{\ell_{bdg}^4}{S^3 s}\,I_{st}$$

where:

$I_{psm\text{-}n50}$: Net moment of inertia, in cm^4, of deck transverse primary supporting member, with effective width of attached plate equal to 0.8S.

ℓ_{bdg} : Effective bending span of deck transverse primary supporting member, in m, as defined in Ch 3, Sec 7.

S : Spacing of deck transverse primary supporting members, in m, as defined in Ch 3, Sec 7.

I_{st} : Moment of inertia of deck stiffeners within the central half of the bending span, in cm^4, as given in [3.1.3].

4.2 Web stiffeners of primary supporting members

4.2.1 Proportions of web stiffeners

The net thickness of web and flange of web stiffeners fitted on primary supporting members is to satisfy the requirements specified in [3.1.1] and [3.1.2].

4.2.2 Bending stiffness of web stiffeners

The net moment of inertia, in cm^4, of web stiffener, I_{st}, fitted on primary supporting members, with effective attached plate, s_{eff}, is not to be less than the minimum moment of inertia defined in Table 2.

Table 2 : Stiffness criteria for web stiffeners

	Stiffener arrangement	Minimum moment of inertia of web stiffeners, in cm^4
A	Web stiffeners fitted along the PSM span 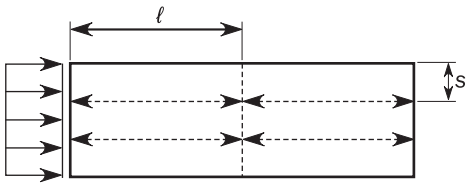	$I_{st} \geq C\ \ell^2\ A_{eff}\ \dfrac{R_{eH}}{235}$
B	Web stiffeners fitted normal to the PSM span 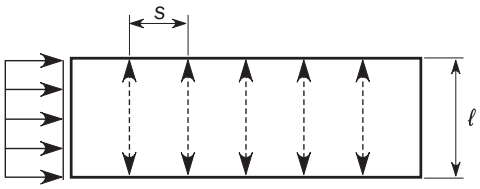	$I_{st} \geq 1.14\ \ell\ s^2\ t_w \left(2.5\ \dfrac{1000\ell}{s} - 2\ \dfrac{s}{1000\ell}\right)\dfrac{R_{eH}}{235}\ 10^{-5}$

where:

C : Slenderness coefficient to be taken as:
C = 1.43 for longitudinal stiffeners including sniped stiffeners.
C = 0.72 for other stiffeners.

ℓ : Length of web stiffener, in m.
For web stiffeners welded to local supporting members, the length is to be measured between the flanges of the local support members.
For sniped web stiffeners, the length is to be measured between the lateral supports, e.g. the total distance between the flanges of the primary supporting member as shown for stiffener arrangement B.

A_{eff} : Net section area of web stiffener including effective attached plate, s_{eff}, in cm^2.

t_w : Net web thickness of the primary supporting member, in mm.

R_{eH} : Specified minimum yield stress of the material of the web plate of the primary supporting member, in N/mm^2.

5 BRACKETS

5.1 Tripping brackets

5.1.1 Unsupported flange length

The unsupported length of the flange of the primary supporting member, in m, i.e. the distance between tripping brackets, is not to be greater than:

$$S_b = b_f\ C \sqrt{\frac{A_{f-n50}}{\left(A_{f-n50} + \dfrac{A_{w-n50}}{3}\right)} \left(\frac{235}{R_{eH}}\right)}$$, but need not be less than $S_{b\text{-}min}$.

where:

b_f : Flange breadth of primary supporting members, in mm.

C : Slenderness coefficient taken as:

C = 0.022 for symmetrical flanges.

C = 0.033 for asymmetrical flanges.

$A_{f\text{-}n50}$: Net cross sectional area of flange, in cm^2.

$A_{w\text{-}n50}$: Net cross sectional area of the web plate, in cm^2.

R_{eH} : Specified minimum yield stress of the PSM material, in N/mm^2.

$S_{b\text{-}min}$: Minimum unsupported flange length taken as:

$S_{b\text{-}min}$ = 3.0 m for the cargo tank/hold region, on tank/hold boundaries or the hull envelope including external decks.

$S_{b\text{-}min}$ = 4.0 m for other areas.

5.1.2 Edge stiffening

Tripping brackets on primary supporting members are to be stiffened by a flange or edge stiffener if the effective length of the edge, ℓ_b as defined in Table 3, in mm, is greater than:

$$\ell_b = 75 t_b$$

where:

t_b : Bracket net web thickness, in mm.

5.2 End brackets

5.2.1 Proportions

The net web thickness of end brackets, in mm, subject to compressive stresses is not to be less than:

$$t_b = \frac{d_b}{C}\sqrt{\frac{R_{eH}}{235}}$$

where:

d_b : Depth of brackets, in mm, as defined in Table 3.

C : Slenderness coefficient as defined in Table 3.

R_{eH} : Specified minimum yield stress of the end bracket material, in N/mm^2.

5.3 Edge reinforcement

5.3.1 Edge reinforcements of bracket edges

The depth of stiffener web, h_w in mm, of edge stiffeners in way of bracket edges is not to be less than:

$$h_w = C\,\ell_b / 1000\sqrt{\frac{R_{eH}}{235}} \qquad \text{or 50, whichever is greater}$$

where:

C : Slenderness coefficient taken as:

C = 75 for end brackets.

C = 50 for tripping brackets.

R_{eH} : Specified minimum yield stress of the stiffener material, in N/mm^2.

5.3.2 Proportions of edge stiffeners

The net thickness of the web plate and flange of the edge stiffener is to satisfy the requirements specified in [3.1.1] and [3.1.2].

Table 3 : Buckling coefficient, *C*, for proportions of brackets

Mode	*C*
Brackets without edge stiffener 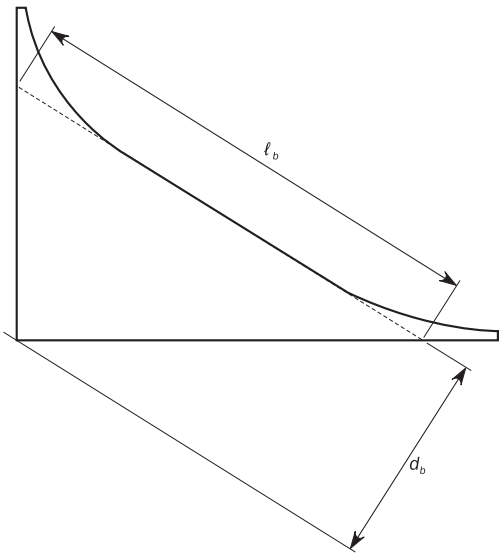	$C = 20\left(\frac{d_b}{\ell_b}\right) + 16$ where: $0.25 \le \frac{d_b}{\ell_b} \le 1.0$
Brackets with edge stiffener 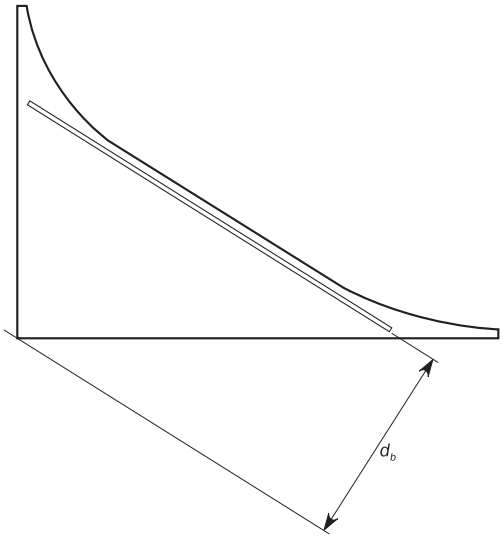	$C = 70$

6 OTHER STRUCTURES

6.1 Pillars

6.1.1 Proportions of I-section pillars

For I-sections, the thickness of the web plate and the flange thickness are to comply with requirements specified in [3.1.1] and [3.1.2].

6.1.2 Proportions of box section pillars

The thickness of thin walled box sections is to comply with the requirements specified in item (a) of [3.1.1].

6.1.3 Proportions of circular section pillars

The net thickness, t, of circular section pillars, in mm, is to comply with the following criterion:

$$t \geq \frac{r}{50}$$

where:

r : Mid thickness radius of the circular section, in mm.

6.2 Edge reinforcement in way of openings

6.2.1 Depth of edge stiffener

When fitted as shown in Figure 2, the depth of web, h_w in mm, of edge stiffeners in way of openings is not to be less than:

$$h_w = C\,\ell\sqrt{\frac{R_{eH}}{235}} \quad \text{or 50 mm, whichever is greater.}$$

where:

C : Slenderness coefficient taken as:

$C = 50$

R_{eH} : Specified minimum yield stress of the edge stiffener material, in N/mm^2.

6.2.2 Proportions of edge stiffeners

The net thickness of the web plate and flange of the edge stiffener is to satisfy the requirements specified in [3.1.1] and [3.1.2].

Figure 2 : Typical edge reinforcements

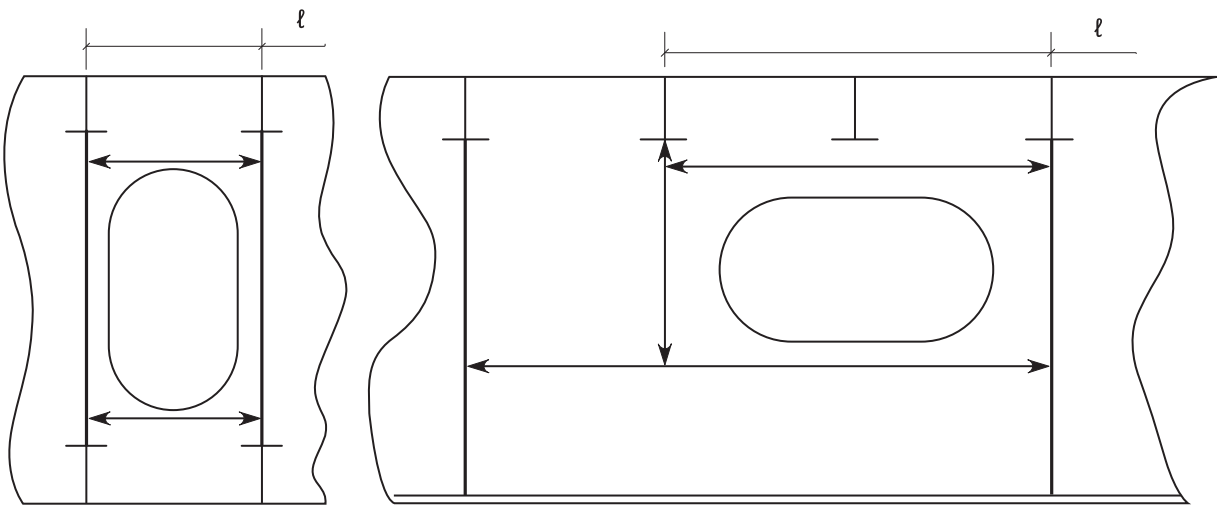

SECTION 3
PRESCRIPTIVE BUCKLING REQUIREMENTS

SYMBOLS

η_{all} : Allowable buckling utilisation factor, as defined in Ch 8, Sec 1, [3.3].

EPP : Elementary Plate Panel as defined in Ch 3, Sec 7, [2.1].

LCP : Load calculation point as defined in Ch 3, Sec 7, [2.2.2] and Ch 3, Sec 7, [3.2].

1 GENERAL

1.1 Scope

1.1.1

This section applies to plate panels including curved plate panels and stiffeners subject to hull girder compression and shear stresses. In addition the following structural members subject to compressive stresses are to be checked:

- Corrugation of transverse vertically corrugated bulkhead.
- Corrugation of longitudinal corrugated bulkhead.
- Strut.
- Pillar.
- Cross tie.

1.1.2

The hull girder buckling strength requirements apply along the full length of the ship.

1.1.3 Design load sets

The buckling checks are to be performed for all design load sets defined in Ch 6, Sec 2, [2], both in intact and in flooded conditions with pressure combination defined in Ch 6, Sec 2, [1.3].

For each design load set, for all dynamic load cases, the lateral pressure is to be determined according to Ch 4 at the load calculation point defined in Ch 3, Sec 7, and is to be applied together with the hull girder stress combinations given in [2.2].

1.2 Equivalent plate panel

1.2.1

In longitudinal stiffening arrangement, when the plate thickness varies over the width b, of a plate panel, the buckling check is to be performed for an equivalent plate panel width, combined with the smaller plate thickness, t_1. The width of this equivalent plate panel, b_{eq}, in mm, is defined by the following formula:

$$b_{eq} = \ell_1 + \ell_2 \left(\frac{t_1}{t_2}\right)^{1.5}$$

where:

ℓ_1 : Width of the part of the plate panel with the smaller net plate thickness, t_1, in mm, as defined in Figure 1.

ℓ_2 : Width of the part of the plate panel with the greater net plate thickness, t_2, in mm, as defined in Figure 1.

Figure 1 : Plate thickness change over the width

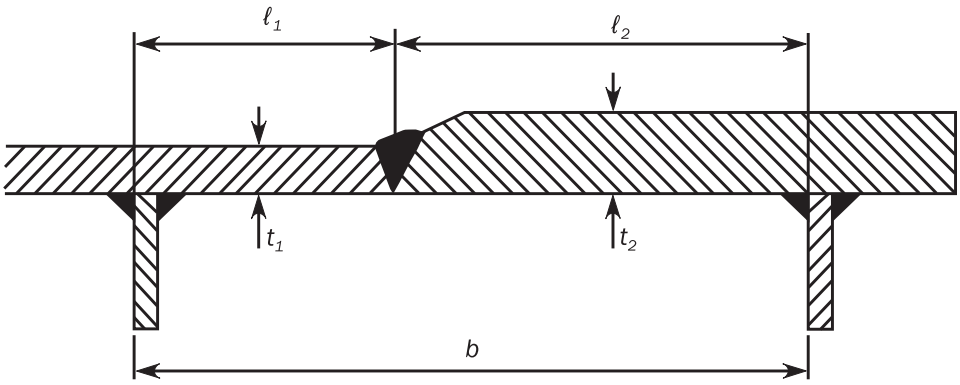

1.2.2

In transverse stiffening arrangement, when an EPP is made with different thicknesses, the buckling check of the plate and stiffeners is to be made for each thickness considered constant on the EPP, the stresses and pressures being estimated for the EPP at the LCP.

1.2.3 Materials

When the plate panel is made of different materials, the minimum yield strength is to be used for the buckling assessment.

2 HULL GIRDER STRESS

2.1 General

2.1.1

The hull girder bending stresses, σ_{hg}, in N/mm^2, are determined according to Ch 6, Sec 2.

2.1.2

The hull girder shear stresses, τ_{hg}, in N/mm^2, in the plate *i* are determined as follows:

$$\tau_{hg} = \frac{Q_{Tot}(x)\ q_{vi}}{t_{i-n50}}\ 10^3$$

where:

$Q_{Tot}(x)$: Total vertical shear force, in kN, at the ship longitudinal location *x*, taken as follows:

- For the design load combination S+D
  - For seagoing operations:

$$Q_{Tot}(x) = |Q_{sw} + Q_{wv-LC}|$$

- For flooded conditions at sea for bulk carriers having a length L of 150 m or above:

$$Q_{Tot}(x) = |Q_{sw-f} + Q_{wv-LC}|$$

- For the design load combination S
  - For harbour/sheltered water operations:

$$Q_{Tot}(x) = |Q_{sw-p}|$$

q_{vi} : Contribution ratio in way of the plate i, as defined in Ch 5, Sec 1, [3.2.1].

$t_{i\text{-}n50}$: Net thickness of the plate i, in mm as defined in Ch 5, Sec 1, [3.2.1], used for shear stress calculation.

Q_{sw} : Permissible positive or negative still water shear force for seagoing operation, in kN, at the hull transverse section considered, as defined in Ch 4, Sec 4, [2.3.3].

$Q_{sw\text{-}p}$: Permissible positive or negative still water shear force for harbour/sheltered operation, in kN, at the hull transverse section considered, as defined in Ch 4, Sec 4, [2.3.4].

$Q_{sw\text{-}f}$: Permissible positive or negative still water shear force in flooded condition at sea, in kN, at the hull transverse section considered, as defined in Ch 4, Sec 4, [2.3.5].

$Q_{wv\text{-}LC}$: Vertical wave shear force in seagoing condition, in kN, in intact or flooded conditions at the hull transverse section considered for the considered dynamic load case, defined in Ch 4, Sec 4, [3.5.3].

2.2 Stress combinations

2.2.1

Each elementary plate panel and stiffeners are to satisfy the criteria defined in [3] with the following stress combinations:

a) Longitudinal stiffening arrangement:

- Stress combination 1 with:

$$\sigma_x = \sigma_{hg}$$
$$\sigma_y = 0$$
$$\tau = 0.7\tau_{hg}$$

- Stress combination 2 with:

$$\sigma_x = 0.7\sigma_{hg}$$
$$\sigma_y = 0$$
$$\tau = \tau_{hg}$$

b) Transverse stiffening arrangement:

- Stress combination 1 with:

$$\sigma_x = 0$$
$$\sigma_y = \sigma_{hg}$$
$$\tau = 0.7\tau_{hg}$$

- Stress combination 2 with:

$$\sigma_x = 0$$
$$\sigma_y = 0.7\sigma_{hg}$$
$$\tau = \tau_{hg}$$

where:

σ_{hg} : Hull girder bending stress in the elementary plate panel or stiffener, as defined in [2.1.1], in N/mm^2.

τ_{hg} : Hull girder shear stress, in N/mm^2, in the elementary plate panel or stiffener attached plate as defined in [2.1.2].

3 BUCKLING CRITERIA

3.1 Overall stiffened panel

3.1.1

The buckling strength of overall stiffened panels is to satisfy the following criterion:

$\eta_{Overall} \leq \eta_{all}$

where:

$\eta_{Overall}$: Maximum utilisation factor as defined in Ch 8, Sec 5, [2.1].

3.2 Plates

3.2.1

The buckling strength of elementary plate panels is to satisfy the following criterion:

$\eta_{Plate} \leq \eta_{all}$

where:

η_{Plate} : Maximum plate utilisation factor calculated according to SP-A, as defined in Ch 8, Sec 5, [2.2].

For the determination of η_{Plate} of the vertically stiffened side shell plating of single side skin bulk carrier between hopper and topside tanks, the cases 12 and 16 of Ch 8, Sec 5, Table 3 corresponding to the shorter edge of the plate panel clamped are to be considered together with a mean σ_y stress and $\psi_y = 1$.

3.3 Stiffeners

3.3.1

The buckling strength of stiffeners or of side frames of single side skin bulk carriers is to satisfy the following criterion:

$\eta_{Stiffener} \leq \eta_{all}$

where:

$\eta_{Stiffener}$: Maximum stiffener utilisation factor, as defined in Ch 8, Sec 5, [2.3].

Note 1: This capacity check can only be fulfilled when the overall stiffened panel capacity, as defined in [3.1.1], is satisfied.

3.4 Vertically corrugated transverse and longitudinal bulkheads

3.4.1

The shear buckling strength of vertically corrugated transverse and longitudinal bulkheads is to satisfy the following criterion:

$\eta_{Shear} \leq \eta_{all}$

where:

η_{Shear} : Maximum shear corrugated bulkhead utilisation factor.

$$\eta_{Shear} = \frac{\tau_{bhd}}{\tau_c}$$

τ_{bhd} : Shear stress, in N/mm^2, in the bulkhead taken as

- For longitudinal bulkheads: hull girder shear stress defined in [2.1.2]
- For transverse bulkheads: shear stress in the corrugation defined in Pt 2, Ch 1, Sec 3, [3.2.1].

τ_c : Shear critical stress, in N/mm^2, as defined in Ch 8, Sec 5, [2.2.3].

3.5 Horizontally corrugated longitudinal bulkhead

3.5.1

Each corrugation, within the extension of half flange, web and half flange, is to satisfy the following criterion:

$\eta \leq \eta_{all}$

where:

η : Overall column utilisation factor, as defined in Ch 8, Sec 5, [3.1].

3.6 Struts, pillars and cross ties

3.6.1

The compressive buckling strength of struts, pillars and cross ties is to satisfy the following criterion:

$\eta \leq \eta_{all}$

where:

η : Maximum buckling utilisation factor of struts, pillars or cross ties, defined in Ch 8, Sec 5, [3.1].

SECTION 4
BUCKLING REQUIREMENTS FOR DIRECT STRENGTH ANALYSIS

SYMBOLS

η_{all} : Allowable buckling utilisation factor, as defined in Ch 8, Sec 1, [3.3].

α : Aspect ratio of the plate panel, defined in Ch 8, Sec 5.

1 GENERAL

1.1 Scope

1.1.1

The requirements of this Section apply for the buckling assessment of direct strength analysis subjected to compressive stress, shear stress and lateral pressure.

1.1.2

All structural elements in the FE analysis carried out according to Ch 7 are to be assessed individually. The buckling checks have to be performed for the following structural elements:

- Stiffened and unstiffened panels, inclusive curved panels.
- Web plate in way of openings.
- Corrugated bulkhead.
- Vertically stiffened side shell of single side skin bulk carrier.
- Struts, pillars and cross ties.

2 STIFFENED AND UNSTIFFENED PANELS

2.1 General

2.1.1

The plate panel of hull structure is to be modelled as stiffened or unstiffened panel. Method A and Method B as defined in Ch 8, Sec 1, [3] are to be used according to Table 1 and Figure 1 to Figure 9.

2.1.2 Average thickness of plate panel

Where the plate thickness along a plate panel is not constant, the panel used for the buckling assessment is to be modelled according to Ch 7 with a weighted average thickness taken as:

$$t_{avr} = \frac{\sum_{1}^{n} A_i \, t_i}{\sum_{1}^{n} A_i}$$

where:

A_i : Area of the *i*-th plate element.

t_i : Net thickness of the *i*-th plate element.

n : Number of finite elements defining the buckling plate panel.

Table 1 : Structural members

Structural elements	Assessment method	Normal panel definition
Longitudinal structure, see Figure 1, Figure 5 and Figure 7		
Longitudinally stiffened panels Shell envelope Deck Inner hull Hopper tank side Longitudinal bulkheads	SP-A	Length: between web frames Width: between primary supporting members
Double bottom longitudinal girders in line with longitudinal bulkhead or connected to hopper tank side	SP-A	Length: between web frames Width: full web depth
Web of double bottom longitudinal girders not in line with longitudinal bulkhead or not connected to hopper tank side	SP-B	Length: between web frames Width: full web depth
Web of horizontal girders in double side space connected to hopper tank side	SP-A	Length: between web frames Width: full web depth
Web of horizontal girders in double side space not connected to hopper tank side	SP-B	Length: between web frames Width: full web depth
Web of single skin longitudinal girders or stringers	UP-B	Plate between local stiffeners/face plate/PSM
Transverse structure, see Figure 2, Figure 6 and Figure 8		
Web of transverse deck frames including brackets	UP-B	Plate between local stiffeners/face plate/PSM
Vertical web in double side space	SP-B	Length: full web depth Width: between primary supporting members
Irregularly stiffened panels, e.g. web panels in way of hopper tank and bilge	UP-B	Plate between local stiffeners/face plate/PSM
Double bottom floors	SP-B	Length: full web depth Width: between primary supporting members
Vertical web frame including brackets	UP-B	Plate between vertical web stiffeners/face plate/PSM
Cross tie web plate	UP-B	Plate between vertical web stiffeners/face plate/PSM
Transverse oil-tight and watertight bulkheads, see Figure 3 and transverse wash bulkheads, see Figure 4		
Regularly stiffened bulkhead panels inclusive the secondary buckling stiffeners perpendicular to the regular stiffener (such as carlings)	SP-A	Length: between primary supporting members Width: between primary supporting members
Irregularly stiffened bulkhead panels, e.g. web panels in way of hopper tank and bilge	UP-B	Plate between local stiffeners/face plate

Structural elements	Assessment method	Normal panel definition
Web plate of bulkhead stringers including brackets	UP-B	Plate between web stiffeners /face plate
Transverse corrugated bulkheads and cross deck, see Figure 9		
Upper/lower stool including stiffeners	SP-A	Length: between internal web diaphragms Width: length of stool side
Stool internal web diaphragm	UP-B	Plate between local stiffeners /face plate / PSM
Cross deck	SP-A	Plate between local stiffeners/ PSM
Note 1: SP and UP stand for stiffened and unstiffened panel respectively. Note 2: A and B stand for Method A and Method B respectively.		

2.1.3 Yield stress of the plate panel

The panel yield stress R_{eH_P} is taken as the minimum value of the specified yield stresses of the elements within the plate panel.

2.2 Stiffened panels

2.2.1

To represent the overall buckling behaviour, each stiffener with attached plate is to be modelled as a stiffened panel of the extent defined in Table 1.

2.2.2

If the stiffener properties or stiffener spacing varies within the stiffened panel, the calculations are to be performed separately for all configurations of the panels, i.e. for each stiffener and plate between the stiffeners. Plate thickness, stiffener properties and stiffener spacing at the considered location are to be assumed for the whole panel.

Figure 1 : Longitudinal plates for oil tankers

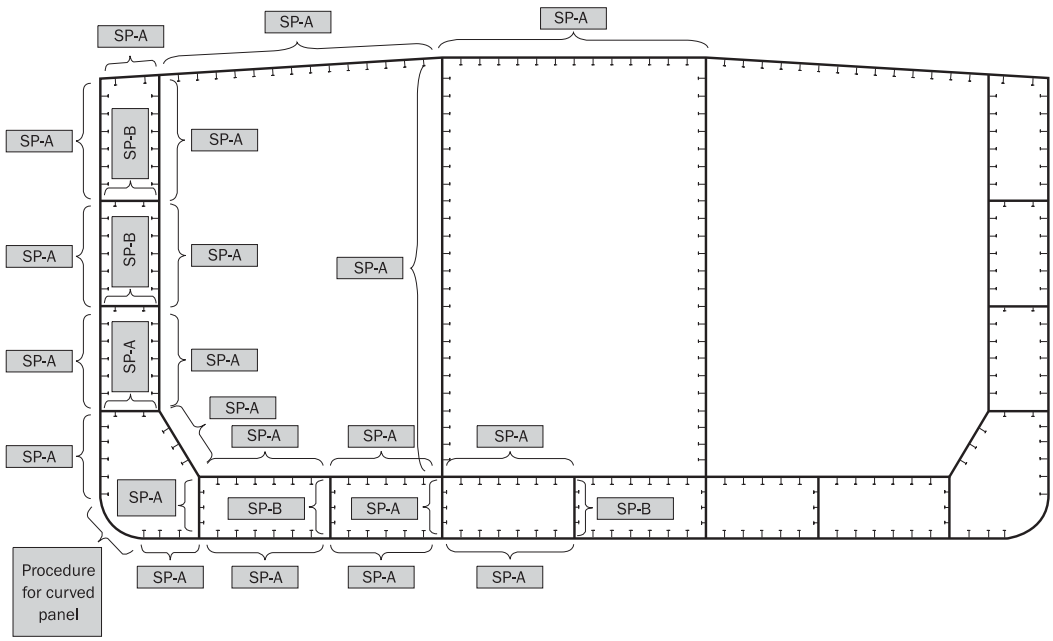

Figure 2 : Transverse web frames for oil tankers

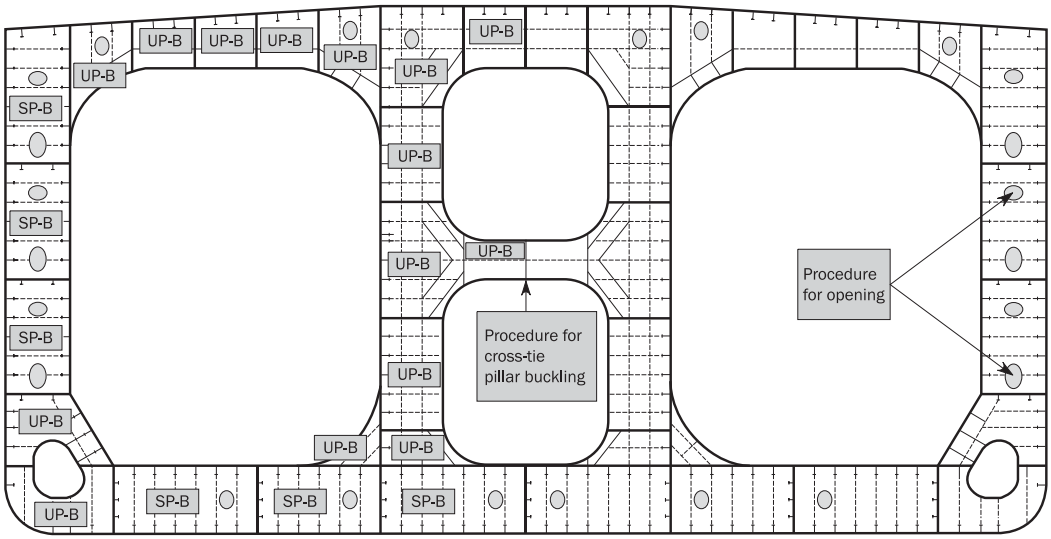

Figure 3 : Transverse bulkhead for oil tankers

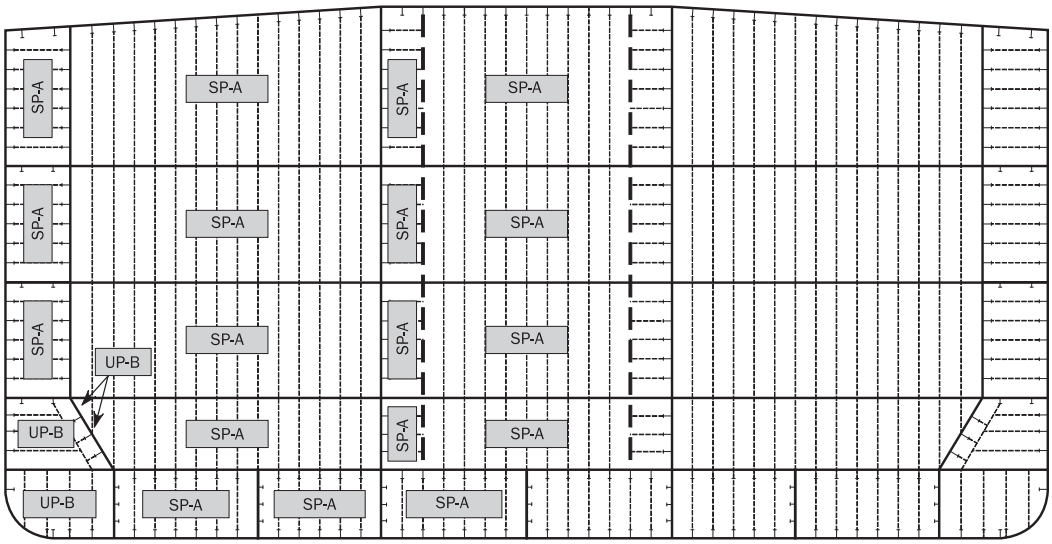

Figure 4 : Cross tie

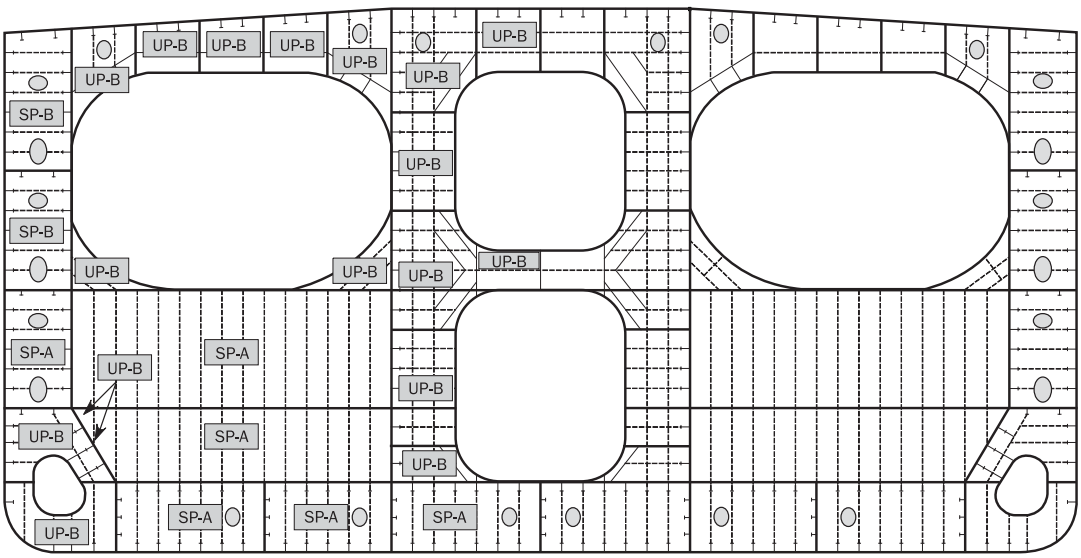

Figure 5 : Longitudinal plates for single hull bulk carrier

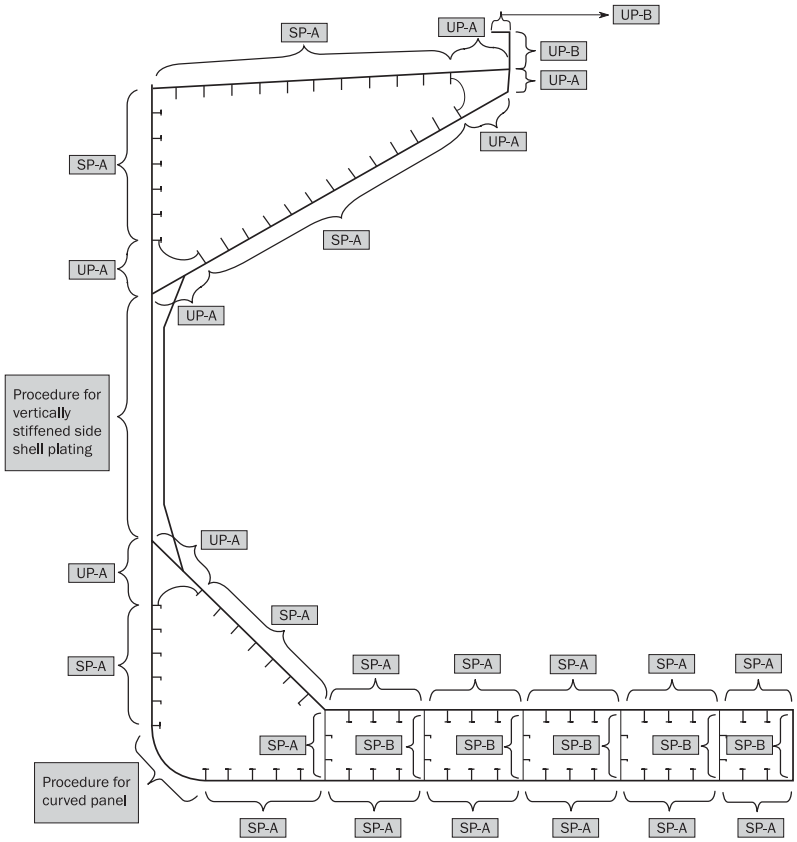

Figure 6 : Transverse web frames for single hull bulk carrier

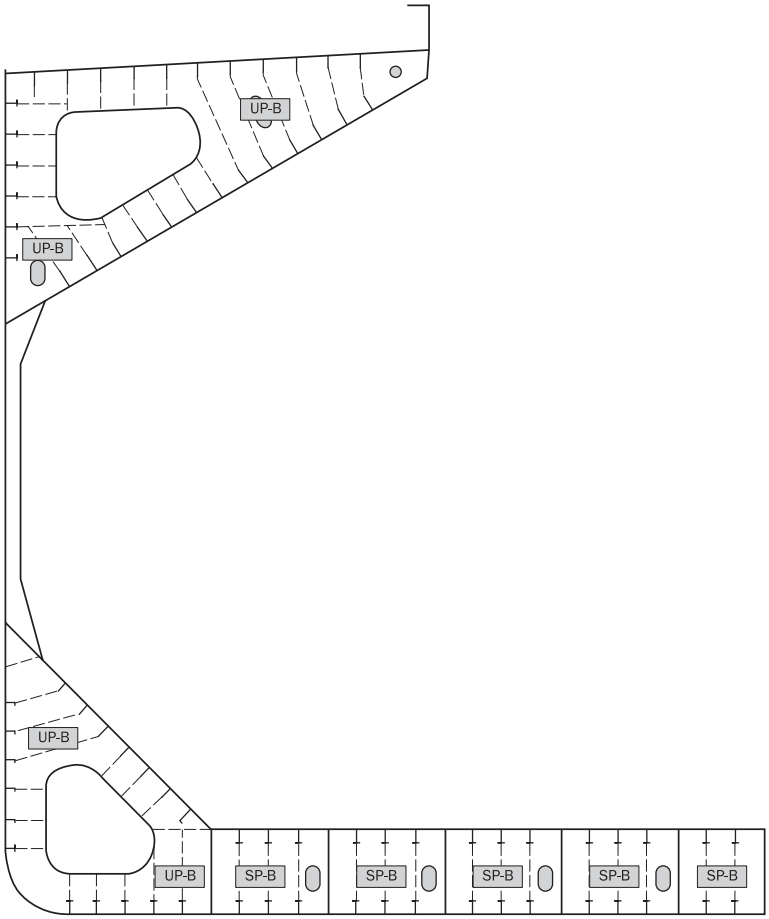

Figure 7 : Longitudinal plates for double hull bulk carrier

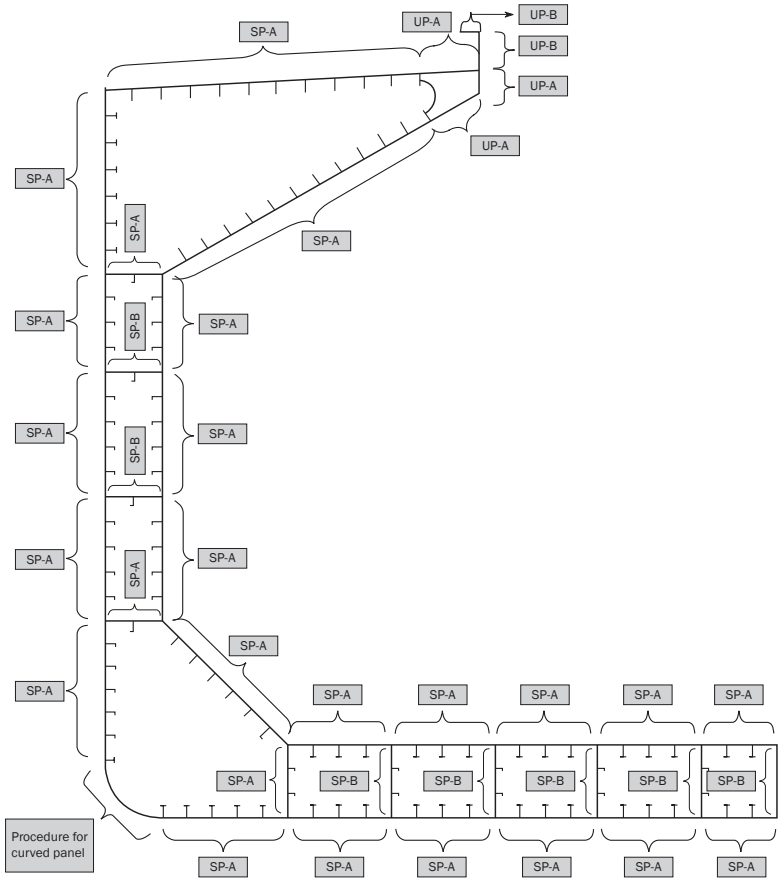

Figure 8 : Transverse web frames for double hull bulk carrier

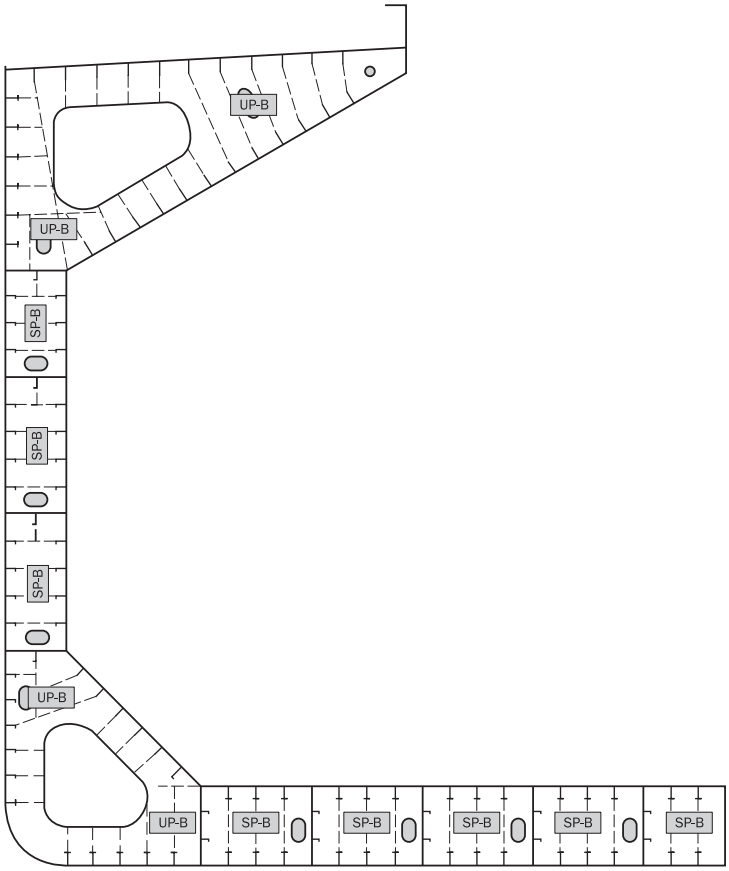

Figure 9 : Corrugated bulkhead and cross deck for bulk carriers

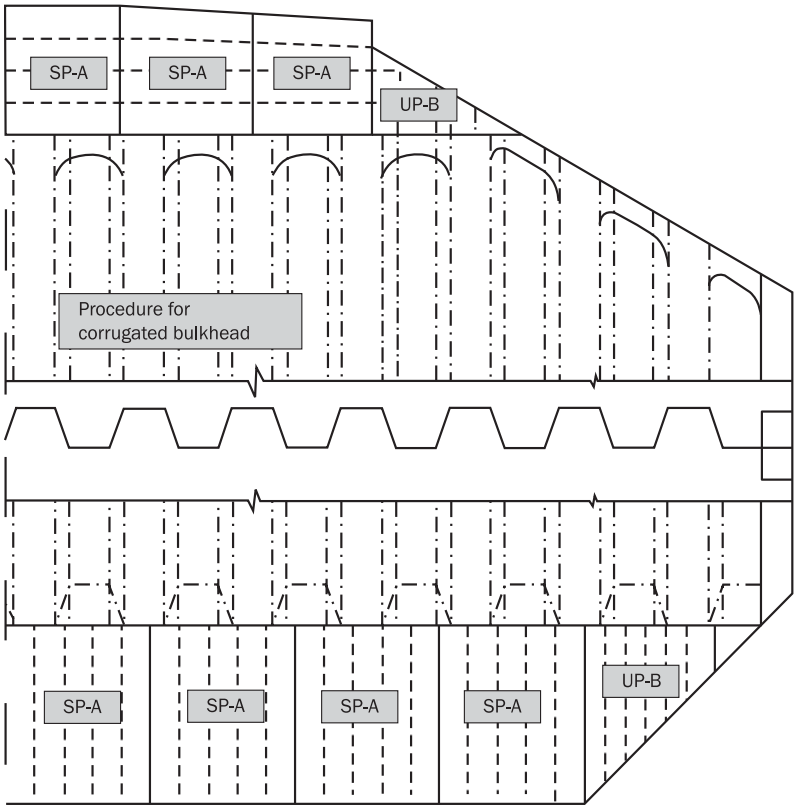

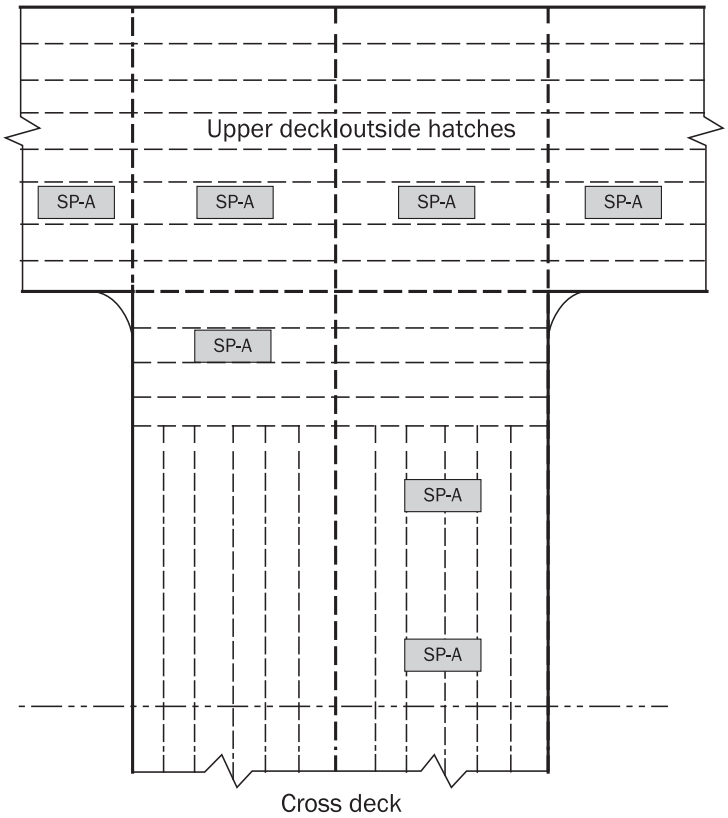

2.3 Unstiffened panels

2.3.1 Irregular plate panel

In way of web frames, stringers and brackets, the geometry of the panel (i.e. plate bounded by web stiffeners/face plate) may not have a rectangular shape. In this case, an equivalent rectangular panel is to be defined according to [2.3.2] for irregular geometry and [2.3.3] for triangular geometry and to comply with buckling assessment.

2.3.2 Modelling of an unstiffened panel with irregular geometry

Unstiffened panels with irregular geometry are to be idealised to equivalent panels for plate buckling assessment according to the following procedure:

a) The four corners closest to a right angle, 90 deg, in the bounding polygon for the plate are identified.

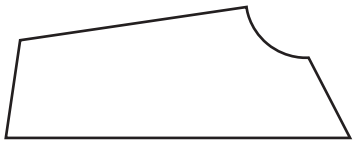

b) The distances along the plate bounding polygon between the corners are calculated, i.e. the sum of all the straight line segments between the end points.

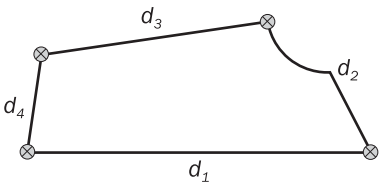

c) The pair of opposite edges with the smallest total length is identified, i.e. minimum of $d_1 + d_3$ and $d_2 + d_4$

d) A line joins the middle points of the chosen opposite edges (i.e. a mid point is defined as the point at half the distance from one end). This line defines the longitudinal direction for the capacity model. The length of the line defines the length of the capacity model, *a* measured from one end point.

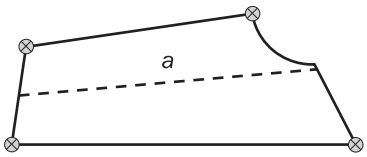

e) The length of shorter side, *b* in mm, is to be taken as:

$$b = A/a$$

where:

A : Area of the plate, in mm^2

a : length defined in (d), in mm

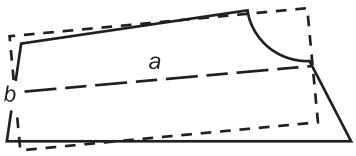

f) The stresses from the direct strength analysis are to be transformed into the local coordinate system of the equivalent rectangular panel. These stresses are to be used for the buckling assessment.

2.3.3 Modelling of an unstiffened plate panel with triangular geometry

Unstiffened panels with triangular geometry are to be idealised to equivalent panels for plate buckling assessment according to the following procedure:

a) Medians are constructed as shown below.

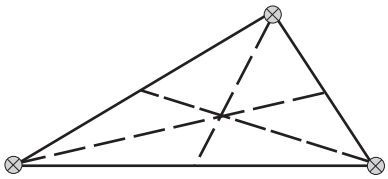

b) The longest median is identified. This median the length of which is ℓ_1 in mm, defines the longitudinal direction for the capacity model.

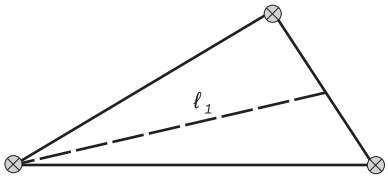

c) The width of the model, ℓ_2, in mm, is to be taken as:

$$\ell_2 = A / \ell_1$$

where:

A : Area of the plate, in mm^2

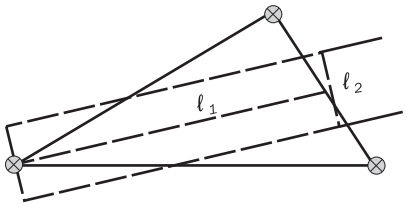

d) The lengths of shorter side, b, and of the longer side, a, in mm, of the equivalent rectangular plate panel are to be taken as:

$$b = \frac{\ell_2}{C_{tri}}$$

$$a = \ell_1 \cdot C_{tri}$$

where:

$$C_{tri} = 0.4 \frac{\ell_2}{\ell_1} + 0.6$$

e) The stresses from the direct strength analysis are to be transformed into the local coordinate system of the equivalent rectangular panel and are to be used for the buckling assessment of the equivalent rectangular panel.

2.4 Reference stress

2.4.1

The stress distribution is to be taken from the direct strength analysis and applied to the buckling model.

2.4.2

The reference stresses are to be calculated using the Stress based reference stresses as defined in App 1.

2.5 Lateral pressure

2.5.1

The lateral pressure applied to the direct strength analysis is also to be applied to the buckling assessment.

2.5.2

Where the lateral pressure is not constant over a buckling panel defined by a number of finite plate elements, an average lateral pressure, N/mm^2, is calculated using the following formula:

$$P_{avr} = \frac{\sum_1^n A_i \, P_i}{\sum_1^n A_i}$$

where:

A_i : Area of the *i*-th plate element, in mm^2.

P_i : Lateral pressure of the *i*-th plate element, in N/mm^2.

n : Number of finite elements in the buckling panel.

2.6 Buckling criteria

2.6.1 UP-A

The compressive buckling strength of UP-A is to satisfy the following criterion:

$\eta_{UP\text{-}A} \leq \eta_{all}$

where:

$\eta_{UP\text{-}A}$: Maximum plate utilisation factor, calculated according to Method A as defined in Ch 8, Sec 5, [2.2].

2.6.2 UP-B

The compressive buckling strength of UP-B is to satisfy the following criterion:

$\eta_{UP\text{-}B} \leq \eta_{all}$

where:

$\eta_{UP\text{-}B}$: Maximum plate utilisation factor, calculated according to Method B as defined in Ch 8, Sec 5, [2.2].

2.6.3 SP-A

The compressive buckling strength of SP-A is to satisfy the following criterion:

$\eta_{SP\text{-}A} \leq \eta_{all}$

where:

$\eta_{SP\text{-}A}$: Maximum stiffened panel utilisation factor taken as the maximum of:

- The overall stiffened panel capacity as defined in Ch 8, Sec 5, [2.1].
- The plate capacity calculated according to Method A as defined in Ch 8, Sec 5, [2.2].
- The stiffener buckling strength as defined in Ch 8, Sec 5, [2.3] considering separately the properties (thickness, dimensions), the pressures defined in [2.5.2] and the reference stresses of each EPP at both sides of the stiffener.

Note 1: The stiffener buckling capacity check can only be fulfilled when the overall stiffened panel capacity, as defined in Ch 8, Sec 5, [2.1], is satisfied.

2.6.4 SP-B

The compressive buckling strength of SP-B is to satisfy the following criterion:

$\eta_{SP\text{-}B} \leq \eta_{all}$

where:

$\eta_{SP\text{-}B}$: Maximum stiffened panel utilisation factor taken as the maximum of:

- The overall stiffened panel capacity as defined in Ch 8, Sec 5, [2.1].
- The plate capacity calculated according to Method B as defined in Ch 8, Sec 5, [2.2].
- The stiffener buckling strength as defined in Ch 8, Sec 5, [2.3] considering separately the properties (thickness, dimensions), the pressures defined in [2.5.2] and the reference stresses of each EPP at both sides of the stiffener.

Note 1: The stiffener buckling capacity check can only be fulfilled when the overall stiffened panel capacity, as defined in Ch 8, Sec 5, [2.1], is satisfied.

2.6.5 Web plate in way of openings

The web plate of primary supporting members with openings is to satisfy the following criterion:

$\eta_{opening} \leq \eta_{all}$

where:

$\eta_{opening}$: Maximum web plate utilisation factor in way of openings, as defined in Ch 8, Sec 5, [2.4].

3 CORRUGATED BULKHEAD

3.1 General

3.1.1

Three buckling failure modes are to be assessed on corrugated bulkheads:

- Corrugation overall column buckling.
- Corrugation flange panel buckling.
- Corrugation web panel buckling.

3.2 Reference stress

3.2.1

Each corrugation flange and web panel is to be assessed.

3.2.2

The membrane stresses at element centroid are to be used.

3.2.3

The maximum normal stress parallel to the corrugation, σ_x, is the maximum of the 2 following stresses:

- The normal stress parallel to the corrugation taken at $b/2$ from the corrugation ends,
- The normal stress parallel to the corrugation within the mid span of the corrugation.

When the corrugation end is fitted with a shedder plate, the normal stress parallel to the corrugation at end is to be taken at $b/2$ from the intersection of the shedder plate with the point at mid breadth of the flange or of the web, as the case may be.

The maximum shear stress is the shear stress which is maximum at the corrugation flange or web at the point $b/2$ from ends as defined above for the normal stress parallel to the corrugation.

The in plane stresses, σ_x and σ_y, and shear stress, τ, are to be taken as the element stresses averaged over the width of the considered member (flange or web) at the considered location.

When the stress value at $b/2$ from ends cannot be obtained directly from FE element, the stress at this location is to be obtained by interpolation. This interpolation is to be made on elements extending over a distance equal to $3b$ to a point located at $b/2$ from the end of the corrugation or from the intersection of the shedder plate if fitted, measured at the mid breadth of the flange or of the web. The interpolation of the in plane stresses, σ_x and σ_y, are to be made in accordance with Ch 8, App 1, [2.1].

The shear stress at $b/2$ is obtained by linear interpolation between the elements most close to '$b/2$' location.

For the application of this requirement, b is defined as follows:

b : Width of the considered member of the corrugation, i.e. flange or web.

3.2.4

Where more than one plate thicknesses are used for flange panel, maximum stress is to be obtained for each thickness range and to be checked with the buckling criteria for each thickness.

3.3 Overall column buckling

3.3.1

The overall buckling failure mode of corrugated bulkheads subjected to axial compression is to be checked for column buckling (e.g. horizontally corrugated bulkheads and vertically corrugated bulkheads subjected to local vertical forces).

Table 2 : Application of overall column buckling for corrugated bulkhead

Bulkhead orientation	Corrugation Orientation	
	Horizontal	Vertical
Longitudinal bulkhead	Required	Required, when subjected to local vertical forces (e.g. crane loads)
Transverse bulkhead	Required	

3.3.2

Each corrugation unit within the extension of half flange, web and half flange (i.e. single corrugation as shown in grey in Figure 10) is to satisfy the following criterion:

$\eta_{Overall} \leq \eta_{all}$

where:

$\eta_{Overall}$: Maximum overall column utilisation factor, as defined in Ch 8, Sec 5, [3.1.1] and Ch 8, Sec 5, [3.1.2], considered as a pillar with a unsupported length taken as the length of the corrugation.

Figure 10 : Single Corrugation

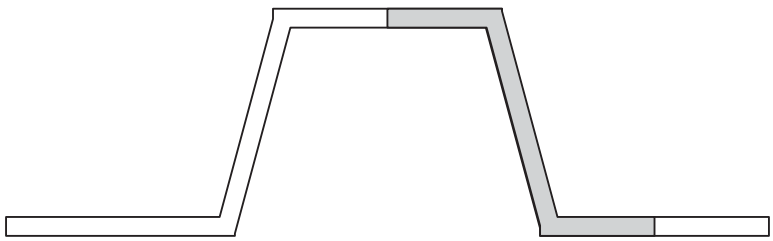

3.3.3

End constraint factor, f_{end} corresponding to pinned ends is to be applied except for fixed end support to be used in way of stool with width exceeding 2 times the depth of the corrugation.

3.4 Local buckling

3.4.1

The compressive buckling strength of a unit flange and a unit web of corrugation bulkheads is to satisfy the following criterion:

$\eta_{Corr} \leq \eta_{all}$

where:

η_{Corr} : Maximum unit flange or unit web utilisation factor, as defined in Ch 8, Sec 5, [3.2.1].

Two stress combinations are to be considered for the application of the above criterion:

- The maximum normal stress parallel to the corrugation, σ_x, combined with the stress perpendicular to the corrugation, σ_y, and with the shear stress, τ, at the location where the maximum normal stress parallel to the corrugation occurs.
- The maximum shear stress, τ, combined with the normal stress parallel to the corrugation, σ_x, and with the stress perpendicular to the corrugation, σ_y, at the location where the maximum shear stress occurs.

The buckling assessment is to be performed for an aspect ratio α equal to 2, and for the thicknesses of the member where the maximum compressive/shear stress occurs (see [3.2.4]).

4 VERTICALLY STIFFENED SIDE SHELL OF SINGLE SIDE SKIN BULK CARRIER

4.1 Buckling criteria

4.1.1 Side shell plating

The compressive buckling strength of the vertically stiffened side shell plating of single side skin bulk carrier is to satisfy the following criterion:

$\eta_{vss} \leq \eta_{all}$

where:

η_{vss} : Maximum vertically stiffened side shell plating utilisation factor calculated according to Method A as defined in Ch 8, Sec 5, [2.2.1] and considering the following boundary conditions and stress combinations:

- 4 edges simply supported (cases 1, 2 and 15 of Ch 8, Sec 5, Table 3):
  - Pure vertical stress:
    - The maximum vertical stress of stress elements is used with

      $\alpha = 1$ and $\psi_x = 1$.
  - Maximum vertical stress combined with longitudinal and shear stress:
    - The maximum vertical stress in the buckling panel plus the shear and longitudinal stresses at the location where the maximum vertical stress occurs is used with

      $\alpha = 2$ and $\psi_x = \psi_y = 1$.
    - The plate thickness to be considered in the buckling strength check is the one where the maximum vertical stress occurs.

- Maximum shear stress combined with longitudinal and vertical stress:
  - The maximum shear stress in the buckling panel plus the longitudinal and vertical stresses at the location where maximum shear stress occurs is used with

    $\alpha = 2$ and $\psi_x = \psi_y = 1$.
  - The plate thickness to be considered in the buckling strength check is the one where the maximum shear stress occurs.

- The 2 shorter edges of the plate panel clamped (cases 11, 12 and 16 of Ch 8, Sec 5, Table 3):
  - Distributed longitudinal stress associated with vertical and shear stress:
    - The actual size of the buckling panel is used to define α.
    - The average values for longitudinal, vertical and shear stresses are to be used.
    - $\psi_x = \psi_y = 1$.
    - The plate thickness to be considered in the buckling strength check is the minimum thickness of the buckling panel.

4.1.2 Side frames

The buckling strength of side frames of single side skin bulk carriers is to satisfy the following criterion:

$\eta_{Stiffener} \leq \eta_{all}$

where:

$\eta_{Stiffener}$: Maximum stiffener utilisation factor, as defined in Ch 8, Sec 5, [2.3].

5 STRUTS, PILLARS AND CROSS TIES

5.1 Buckling criteria

5.1.1

The compressive buckling strength of struts, pillars and cross ties is to satisfy the following criterion:

$\eta_{Pillar} \leq \eta_{all}$

The buckling strength of elementary plate panels of cross ties is to satisfy the following criterion:

$\eta_{Plate} \leq \eta_{all}$

where:

η_{Pillar} : Maximum utilisation factor of struts, pillars or cross ties, as defined in Ch 8, Sec 5, [3.1].

η_{Plate} : Maximum plate utilisation factor calculated according to UP-B, as defined in Ch 8, Sec 5, [2.2].

[RCN1 to 01 JAN 2020]

SECTION 5
BUCKLING CAPACITY

SYMBOLS

For symbols not defined in this section, refer to Ch 1, Sec 4.

A_s : Net sectional area of the stiffener without attached plating, in mm^2.

a : Length of the longer side of the plate panel, in mm.

b : Length of the shorter side of the plate panel, in mm.

b_{eff} : Effective width of the attached plating of a stiffener, in mm, as defined in [2.3.5].

b_{eff1} : Effective width of the attached plating of a stiffener, in mm, without the shear lag effect taken as:

- For $\sigma_x > 0$
  - For prescriptive assessment:

    $$b_{eff1} = \frac{C_{x1}b_1 + C_{x2}b_2}{2}$$

  - For FE analysis:

    $$b_{eff1} = C_x b$$

- For $\sigma_x \leq 0$

  $$b_{eff1} = b$$

b_f : Breadth of the stiffener flange, in mm.

b_1, b_2 : Width of plate panel on each side of the considered stiffener, in mm.

C_{x1},C_{x2} : Reduction factor defined in Table 3 calculated for the EPP1 and EPP2 on each side of the considered stiffener according to case 1.

d : Length of the side parallel to the axis of the cylinder corresponding to the curved plate panel as shown in Table 4, in mm.

d_e : Distance from upper edge of web to the top of the flange, in mm, as defined in Ch 3, Sec 2, Figure 3.

e_f : Distance from attached plating to centre of flange, in mm, as shown in Figure 1 to be taken as:

$e_f = h_w$	for flat bar profile.
$e_f = h_w - 0.5\ t_f$	for bulb profile.
$e_f = h_w + 0.5\ t_f$	for angle, L2 and Tee profiles.
$e_f = h_w - d_e - 0.5\ t_f$	for L3 profile.

F_{long} : Coefficient defined in [2.2.4].

F_{tran} : Coefficient defined in [2.2.5].

h_w : Depth of stiffener web, in mm, as shown in Figure 1.

ℓ : Span, in mm, of stiffener equal to spacing between primary supporting members or span of side frame equal to the distance between the hopper tank and top wing tank as defined in Pt 2, Ch 1, Sec 2, Figure 2.

R : Radius of curved plate panel, in mm.

R_{eH_P} : Specified minimum yield stress of the plate in N/mm^2.

R_{eH_S} : Specified minimum yield stress of the stiffener in N/mm^2.

S : Partial safety factor to be taken as:

- S = 1.1 for structures which are exposed to local concentrated loads (e.g. container loads on hatch covers, foundations).
- S = 1.15 for bulk carrier stiffeners located on the hatchway coamings, the sloping plate of the topside and hopper tanks, the inner bottom, the inner side if any, the side shell of single side skin construction and the top and bottom stools of transverse bulkheads.
- S = 1.0 for all other cases.

t_p : Net thickness of plate panel, in mm.

t_w : Net stiffener web thickness, in mm.

t_f : Net flange thickness, in mm.

x axis : Local axis of a rectangular buckling panel parallel to its long edge.

y axis : Local axis of a rectangular buckling panel perpendicular to its long edge.

α : Aspect ratio of the plate panel, defined in Table 3 to be taken as:

$$\alpha = \frac{a}{b}$$

β : Coefficient taken as:

$$\beta = \frac{1-\psi}{\alpha}$$

ω : Coefficient taken as:

$$\omega = min\ (3;\alpha)$$

σ_x : Stress applied on the edge along *x* axis of the buckling panel, in N/mm^2.

σ_y : Stress applied on the edge along *y* axis of the buckling panel, in N/mm^2.

σ_1 : Maximum stress, in N/mm^2.

σ_2 : Minimum stress, in N/mm^2.

σ_E : Elastic buckling reference stress, in N/mm^2 to be taken as:

- For the application of plate limit state according to [2.2.1]:

$$\sigma_E = \frac{\pi^2 E}{12(1-\nu^2)}\left(\frac{t_p}{b}\right)^2$$

- For the application of curved plate panels according to [2.2.6]:

$$\sigma_E = \frac{\pi^2 E}{12(1-\nu^2)}\left(\frac{t_p}{d}\right)^2$$

τ : Applied shear stress, in N/mm^2.

τ_c : Buckling strength in shear, in N/mm^2, as defined in [2.2.3].

ψ : Edge stress ratio to be taken as:

$$\psi = \frac{\sigma_2}{\sigma_1}$$

γ : Stress multiplier factor acting on loads. When the factor is such that the loads reach the interaction formulae, $\gamma = \gamma_c$.

γ_c : Stress multiplier factor at failure.

γ_{GEB} : Stress multiplier factor of global elastic buckling capacity.

[RCN1 to 01 JAN 2020]

Figure 1 : Stiffener cross sections

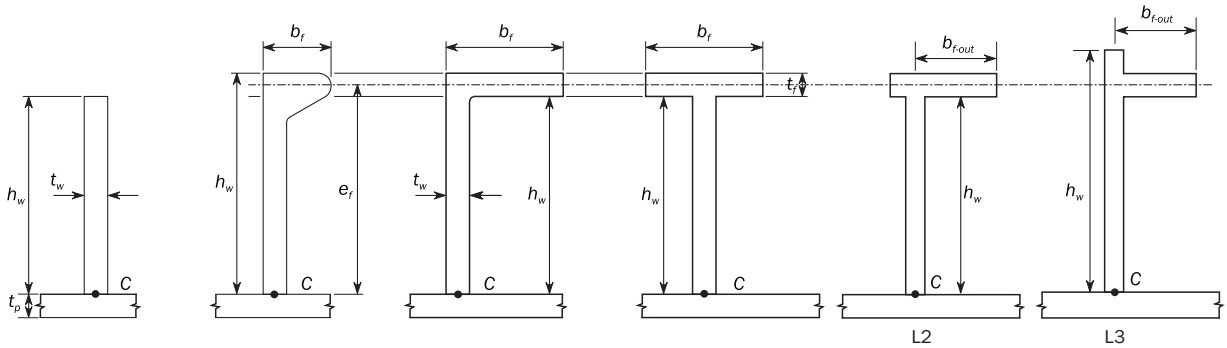

1 General

1.1 Scope

1.1.1

This section contains the methods for determination of the buckling capacity of plate panels, stiffeners, primary supporting members, struts, pillars, cross ties and corrugated bulkheads.

1.1.2

For the application of this section, the stresses σ_x, σ_y and τ applied on the structural members are defined in:

- Ch 8, Sec 3 for prescriptive requirements.
- Ch 8, Sec 4 for FE analysis requirements.

1.1.3 Ultimate buckling capacity

The ultimate buckling capacity is calculated by applying the actual stress combination and then increasing or decreasing the stresses proportionally until the interaction formulae defined in [2.1.1], [2.2.1], and [2.3.4] are equal to 1.0.

1.1.4 Buckling utilisation factor

The buckling utilisation factor of the structural member is equal to the highest utilisation factor obtained for the different buckling modes.

1.1.5 Lateral pressure

The lateral pressure is to be considered as constant in the buckling strength assessment.

2 BUCKLING CAPACITY OF PLATES AND STIFFENERS

2.1 Overall stiffened panel capacity

2.1.1

The elastic stiffened panel limit state is based on the following interaction formula, which sets a precondition for the buckling check of stiffeners in accordance with [2.3.4]:

$$\frac{\gamma}{\gamma_{GEB}} = 1$$

where the stress multiplier factor corresponding to global elastic buckling capacity, γ_{GEB}, is to be calculated based on the following formulae:

$\gamma_{GEB} = \gamma_{GEB,bi+\tau}$ for $\tau \neq 0$ and ($\sigma_x > 0$ or $\sigma_y > 0$)
$\gamma_{GEB} = \gamma_{GEB,bi}$ for $\tau = 0$ and ($\sigma_x > 0$ or $\sigma_y > 0$)
$\gamma_{GEB} = \gamma_{GEB,\tau}$ for $\tau \neq 0$ and ($\sigma_x \leq 0$ and $\sigma_y \leq 0$)

where $\gamma_{GEB,bi+\tau}$, $\gamma_{GEB,bi}$ and $\gamma_{GEB,\tau}$ are stress multiplier factors for different load combinations as defined in [2.1.2], [2.1.3] and [2.1.4], respectively. For the calculation of $\gamma_{GEB,bi+\tau}$, $\gamma_{GEB,bi}$ and $\gamma_{GEB,\tau}$, neither σ_x nor σ_y shall be taken less than 0.

σ_x, σ_y : Applied normal stresses to the plate panel, in N/mm^2, to be taken as defined in [2.2.7].

τ : Applied shear stress, in N/mm^2, to be taken as defined in [2.2.7].

[RCN1 to 01 JAN 2020]

2.1.2

The stress multiplier factor $\gamma_{GEB,bi}$ for the stiffened panel subjected to biaxial loads is taken as:

$$\gamma_{GEB,i} = \frac{\pi^2}{L_{B1}^2 L_{B2}^2} \frac{[D_{11}L_{B2}^4 + 2(D_{12} + D_{33})n^2 L_{B1}^2 L_{B2}^2 + n^4 D_{22} L_{B1}^4]}{L_{B2}^2 N_x + n^2 L_{B1}^2 K_{tran} N_y}$$

where:

N_x : Load per unit length applied on the edge along x axis of the stiffened panel, in N/mm, taken as:

$$N_x = \sigma_{x,av}(t_p s + t_w h_w + t_f b_f)/s$$

N_y : Load per unit length applied on the edge along y axis of the stiffened panel, in N/mm, taken as:

$$N_y = c\sigma_y t_p$$

L_{B1} : Stiffener span, in mm, equal to spacing between primary supporting members, i.e. $L_{B1} = \ell$

For vertically stiffened side shell of single side skin bulk carriers, $L_{B1} = 0{,}8\,\ell$

L_{B2} : Width of the stiffened panel, in mm, taken as 6 times of the stiffener spacing, i.e. 6s

n : Number of half waves along the direction perpendicular to the stiffener axis. The factor $\gamma_{GEB,bi}$ is to be minimized with respect to the wave parameter n, i.e. to be taken as the smallest value larger than zero.

K_{tran} : Coefficient taken as 0.9.

c : Factor taking into account the stresses in the attached plating acting perpendicular to the stiffener axis:

$c = 0.5\,(1 + \psi)$ for $0 \le \psi \le 1$

$c = \dfrac{1}{2(1-\psi)}$ for $\psi < 0$

ψ : Edge stress ratio for case 2 according to Table 3.

$\sigma_{x,av}$: Average stress, in N/mm^2, for both plate and stiffener with Poisson correction, taken as:

$\sigma_{x,av} = \sigma_x - v\,\sigma_y\,A_s / (A_p + A_s) \ge 0$ for $\sigma_x > 0$ and $\sigma_y > 0$

$\sigma_{x,av} = \sigma_x$ for $\sigma_x \le 0$ or $\sigma_y \le 0$

D_{11}, D_{12}, D_{22}, D_{33}:Bending stiffness coefficients, in Nmm, of the stiffened panel, defined as:

$$D_{11} = \frac{EI_{eff}10^4}{s}$$

$$D_{12} = \frac{Et_p^3 v}{12(1-v^2)}$$

$$D_{22} = \frac{Et_p^3}{12(1-v^2)}$$

$$D_{33} = \frac{Et_p^3}{12(1+v)}$$

I_{eff} : Moment of inertia, in cm^4, of the stiffener including effective width of attached plating, the same as I defined in [2.3.4].

[RCN1 to 01 JAN 2020]

2.1.3

The stress multiplier factor $\gamma_{GEB,\tau}$ for the stiffened panel subjected to pure shear load is taken as:

$$\gamma_{GEB,\tau} = \frac{\sqrt[4]{D_{11}^3 D_{22}}}{(L_{B1}/2)^2 N_{xy}}\left[8.125 + 5.64\sqrt{\frac{(D_{12}+D_{33})^2}{D_{11}D_{22}}} - 0.6\frac{(D_{12}+D_{33})^2}{D_{11}D_{22}}\right] \quad \text{for } D_{11}D_{22} \ge (D_{12}+D_{33})^2$$

$$\gamma_{GEB,\tau} = \frac{\sqrt{2D_{11}(D_{12}+D_{33})}}{(L_{B1}/2)^2 N_{xy}}\left[8.3 + 1.525\frac{D_{11}D_{22}}{(D_{12}+D_{33})^2} - 0.493\frac{D_{11}^2 D_{22}^2}{(D_{12}+D_{33})^4}\right] \quad \text{for } D_{11}D_{22} < (D_{12}+D_{33})^2$$

where

$N_{xy} = \tau t$

[RCN1 to 01 JAN 2020]

2.1.4

The stress multiplier factor $\gamma_{GEB,bi+\tau}$ for the stiffened panel subjected to combined loads is taken as:

$$\gamma_{GEB,bi+\tau} = \frac{1}{2}\gamma_{GEB,\tau}^2\left[-\frac{1}{\gamma_{GEB,bi}} + \sqrt{\frac{1}{\gamma_{GEB,bi}^2} + 4\frac{1}{\gamma_{GEB,\tau}^2}}\right]$$

where $\gamma_{GEB,bi}$ and $\gamma_{GEB,\tau}$ are as defined in [2.1.2] and [2.1.3], respectively.

[RCN1 to 01 JAN 2020]

2.2 Plate capacity

2.2.1 Plate limit state

The plate limit state is based on the following interaction formulae:

$$\left(\frac{\gamma_{c1}\,\sigma_x\,S}{\sigma'_{cx}}\right)^{e_0} - B\left(\frac{\gamma_{c1}\,\sigma_x\,S}{\sigma'_{cx}}\right)^{e_0/2}\left(\frac{\gamma_{c1}\,\sigma_y\,S}{\sigma'_{cy}}\right)^{e_0/2} + \left(\frac{\gamma_{c1}\,\sigma_y\,S}{\sigma'_{cy}}\right)^{e_0} + \left(\frac{\gamma_{c1}\,|\tau|\,S}{\tau'_c}\right)^{e_0} = 1$$

$$\left(\frac{\gamma_{c2}\,\sigma_x\,S}{\sigma'_{cx}}\right)^{2/\beta_p^{0.25}} + \left(\frac{\gamma_{c2}\,|\tau|\,S}{\tau'_c}\right)^{2/\beta_p^{0.25}} = 1 \quad \text{for } \sigma_x \geq 0$$

$$\left(\frac{\gamma_{c3}\,\sigma_y\,S}{\sigma'_{cy}}\right)^{2/\beta_p^{0.25}} + \left(\frac{\gamma_{c3}\,|\tau|\,S}{\tau'_c}\right)^{2/\beta_p^{0.25}} = 1 \quad \text{for } \sigma_y \geq 0$$

$$\frac{\gamma_{c4}\,|\tau|\,S}{\tau'_c} = 1$$

with

$$\gamma_c = min(\gamma_{c1}, \gamma_{c2}, \gamma_{c3}, \gamma_{c4})$$

where:

σ_x, σ_y : Applied normal stress to the plate panel, in N/mm^2, to be taken as defined in [2.2.7].

τ : Applied shear stress to the plate panel, in N/mm^2.

σ_{cx}' : Ultimate buckling stress, in N/mm^2, in direction parallel to the longer edge of the buckling panel as defined in [2.2.3].

σ_{cy}' : Ultimate buckling stress, in N/mm^2, in direction parallel to the shorter edge of the buckling panel as defined in [2.2.3].

τ_c' : Ultimate buckling shear stresses, in N/mm^2, as defined in [2.2.3].

γ_{c1}, γ_{c2}, γ_{c3}, γ_{c4}: Stress multiplier factors at failure for each of the above different limit states. γ_{c2} and γ_{c3} are only to be considered when $\sigma_x \geq 0$ and $\sigma_y \geq 0$ respectively.

B : Coefficient given in Table 1.

e_0 : Coefficient given in Table 1.

β_p : Plate slenderness parameter taken as:

$$\beta_p = \frac{b}{t_p}\sqrt{\frac{R_{eH_P}}{E}}$$

Table 1 : Definition of coefficients *B* and e_0

Applied Stress	*B*	e_0
$\sigma_x \geq 0$ and $\sigma_y \geq 0$	$0.7 - 0.3\,\beta_p/\alpha^2$	$2/\beta_p^{0.25}$
$\sigma_x < 0$ or $\sigma_y < 0$	1.0	2.0

2.2.2 Reference degree of slenderness

The reference degree of slenderness is to be taken as:

$$\lambda = \sqrt{\frac{R_{eH_P}}{K\sigma_E}}$$

where:

K : Buckling factor, as defined in Table 3 and Table 4.

2.2.3 Ultimate buckling stresses

The ultimate buckling stresses of plate panels, in N/mm^2, are to be taken as:

$\sigma_{cx}' = C_x R_{eH_P}$

$\sigma_{cy}' = C_y R_{eH_P}$

The ultimate buckling stress of plate panels subject to shear, in N/mm^2, is to be taken as:

$$\tau_c' = C_\tau \frac{R_{eH_P}}{\sqrt{3}}$$

where:

C_x, C_y, C_τ: Reduction factors, as defined in Table 3.

- For the 1st Equation of [2.2.1], when $\sigma_x < 0$ *or* $\sigma_y < 0$, the reduction factors are to taken as:

  $C_x = C_y = C_\tau = 1.$

- For the other cases:

  - For SP-A and UP-A, C_y is calculated according to Table 3 by using

    $$c_1 = \left(1 - \frac{1}{\alpha}\right) \geq 0$$

  - For SP-B and UP-B, C_y is calculated according to Table 3 by using

    $$c_1 = 1$$

  - For vertically stiffened single side skin of bulk carrier, C_y is calculated according to Table 3 by using

    $$c_1 = \left(1 - \frac{1}{\alpha}\right) \geq 0$$

  - For corrugation of corrugated bulkheads, C_y is calculated according to Table 3 by using

    $$c_1 = \left(1 - \frac{1}{\alpha}\right) \geq 0$$

The boundary conditions for plates are to be considered as simply supported, see cases 1, 2 and 15 of Table 3. If the boundary conditions differ significantly from simple support, a more appropriate boundary condition can be applied according to the different cases of Table 3 subject to the agreement of the Society.

2.2.4 Correction factor F_{long}

The correction factor F_{long} depending on the edge stiffener types on the longer side of the buckling panel is defined in Table 2. An average value of F_{long} is to be used for plate panels having different edge stiffeners. For stiffener types other than those mentioned in Table 2, the value of c is to be agreed by the Society. In such a case, value of c higher than those mentioned in Table 2 can be used, provided it is verified by buckling strength check of panel using non-linear FE analysis and deemed appropriate by the Society.

2.2.5 Correction factor F_{tran}

The correction factor F_{tran} is to be taken as:

- For transversely framed EPP of single side skin bulk carrier, between the hopper and top wing tank:
  - F_{tran} = 1.25 when the two adjacent frames are supported by one tripping bracket fitted in way of the adjacent plate panels.
  - F_{tran} = 1.33 when the two adjacent frames are supported by two tripping brackets each fitted in way of the adjacent plate panels.
  - F_{tran} = 1.15 elsewhere.
- For other cases: F_{tran} = 1

Table 2 : Correction factor F_{long}

Structural element types			F_{long}	c
Unstiffened Panel			1.0	N/A
Stiffened Panel	Stiffener not fixed at both ends		1.0	N/A
	Stiffener fixed at both ends	Flat bar (1)	$F_{long} = c + 1$ for $\frac{t_w}{t_p} > 1$	0.10
		Bulb profile		0.30
		Angle, L2 and L3 profiles		0.40
		T profile	$F_{long} = c\left(\frac{t_w}{t_p}\right)^3 + 1$ for $\frac{t_w}{t_p} \le 1$	0.30
		Girder of high rigidity (e.g. bottom transverse)	1.4	N/A
		U type profile fitted on hatch cover (2)	• Plate on which the U type profile is fitted • For $b_2 < b_1$: F_{long} = 1 • For $b_2 \ge b_1$: $F_{long} = \left(1.55 - 0.55\frac{b_1}{b_2}\right)\left[1 + c\left(\frac{t_w}{t_p}\right)^3\right]$ • Other plate of the U type profile: F_{long} = 1	0.2

(1) t_w is the net web thickness, in mm, without the correction defined in [2.3.2].

(2) b_1 and b_2 are defined in Pt 2, Ch 1, Sec 5, Figure 1.

2.2.6 Curved plate panels

This requirement for curved plate limit state is applicable when $R/t_p \le 2500$. Otherwise, the requirement for plate limit state given in [2.2.1] is applicable.

The curved plate limit state is based on the following interaction formula:

$$\left(\frac{\gamma_c \sigma_{ax} S}{C_{ax} R_{eH_P}}\right)^{1.25} - 0.5\left(\frac{\gamma_c \sigma_{ax} S}{C_{ax} R_{eH_P}}\right)\left(\frac{\gamma_c \sigma_{tg} S}{C_{tg} R_{eH_P}}\right) + \left(\frac{\gamma_c \sigma_{tg} S}{C_{tg} R_{eH_P}}\right)^{1.25} + \left(\frac{\gamma_c \tau \sqrt{3} S}{C_\tau R_{eH_P}}\right)^2 = 1.0$$

where:

σ_{ax} : Applied axial stress to the cylinder corresponding to the curved plate panel, in N/mm^2. In case of tensile axial stresses, σ_{ax} = 0.

σ_{tg} : Applied tangential stress to the cylinder corresponding to the curved plate panel, in N/mm^2. In case of tensile tangential stresses, σ_{tg} = 0.

C_{ax}, C_{tg}, C_τ : Buckling reduction factor of the curved plate panel, as defined in Table 4.

The stress multiplier factor, γ_c, of the curved plate panel need not be taken less than the stress multiplier factor, γ_c, for the expanded plane panel according to [2.2.1].

Table 3 : Buckling factor and reduction factor for plane plate panels

Case	Stress ratio ψ	Aspect ratio α	Buckling factor K	Reduction factor C
1 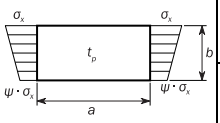	$1 \geq \psi \geq 0$		$K_x = F_{long} \dfrac{8.4}{\psi + 1.1}$	When $\sigma_x \leq 0$: $C_x = 1$ When $\sigma_x > 0$: $C_x = 1$ for $\lambda \leq \lambda_c$ $C_x = c\left(\dfrac{1}{\lambda} - \dfrac{0.22}{\lambda^2}\right)$ for $\lambda > \lambda_c$ where: $c = (1.25 - 0.12\psi) \leq 1.25$ $\lambda_c = \dfrac{c}{2}\left(1 + \sqrt{1 - \dfrac{0.88}{c}}\right)$
	$0 > \psi > -1$		$K_x = F_{long}\,[7.63 - \psi\,(6.26 - 10\psi)]$	
	$\psi \leq -1$		$K_x = F_{long}\,[5.975(1 - \psi)^2]$	
2 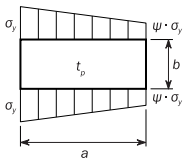	$1 \geq \psi \geq 0$		$K_y = F_{tran} \dfrac{2\left(1 + \dfrac{1}{\alpha^2}\right)^2}{1 + \psi + \dfrac{(1-\psi)}{100}\left(\dfrac{2.4}{\alpha^2} + 6.9 f_1\right)}$	When $\sigma_y \leq 0$: $C_y = 1$ When $\sigma_y > 0$: $C_y = c\left(\dfrac{1}{\lambda} - \dfrac{R + F^2\,(H - R)}{\lambda^2}\right)$ where: $c = (1.25 - 0.12\psi) \leq 1.25$ $R = \lambda(1 - \lambda/c)$ for $\lambda < \lambda_c$ $R = 0.22$ for $\lambda \geq \lambda_c$ $\lambda_c = 0.5c\,(1 + \sqrt{1 - 0.88/c})$ $F = \left[1 - \left(\dfrac{K}{0.91} - 1\right)/\lambda_p^2\right] c_1 \geq 0$ $\lambda_p^2 = \lambda^2 - 0.5$ for $1 \leq \lambda_p^2 \leq 3$ c_1 as defined in [2.2.3] $H = \lambda - \dfrac{2\lambda}{c\,(T + \sqrt{T^2 - 4})} \geq R$ $T = \lambda + \dfrac{14}{15\lambda} + \dfrac{1}{3}$
		$\alpha \leq 6$	$f_1 = (1 - \psi)(\alpha - 1)$	
		$\alpha > 6$	$f_1 = 0.6\left(1 - \dfrac{6\psi}{\alpha}\right)\left(\alpha + \dfrac{14}{\alpha}\right)$ but not greater than $14.5 - \dfrac{0.35}{\alpha^2}$	
	$0 > \psi \geq 1 - \dfrac{4\alpha}{3}$		$K_y = \dfrac{200 F_{tran}(1 + \beta^2)^2}{(1 - f_3)(100 + 2.4\beta^2 + 6.9 f_1 + 23 f_2)}$	
		$\alpha > 6(1 - \psi)$	$f_1 = 0.6\left(\dfrac{1}{\beta} + 14\beta\right)$ but not greater than $14.5 - 0.35\beta^2$ $f_2 = f_3 = 0$	
		$3(1 - \psi) \leq \alpha \leq 6(1 - \psi)$	$f_1 = \dfrac{1}{\beta} - 1$ $f_2 = f_3 = 0$	

Case	Stress ratio ψ	Aspect ratio α	Buckling factor K	Reduction factor C
		$1.5(1-\psi) \le \alpha < 3(1-\psi)$	$f_1 = \frac{1}{\beta} - (2-\omega\beta)^4 - 9(\omega\beta - 1)\left(\frac{2}{3} - \beta\right)$ $f_2 = f_3 = 0$	
		$1-\psi \le \alpha < 1.5(1-\psi)$	• For $\alpha > 1.5$: $f_1 = 2\left(\frac{1}{\beta} - 16\left(1 - \frac{\omega}{3}\right)^4\right)\left(\frac{1}{\beta} - 1\right)$ $f_2 = 3\beta - 2$ $f_3 = 0$ • For $\alpha \le 1.5$: $f_1 = 2\left(\frac{1.5}{1-\psi} - 1\right)\left(\frac{1}{\beta} - 1\right)$ $f_2 = \frac{\psi(1 - 16f_4^2)}{1-\alpha}$ $f_3 = 0$ $f_4 = (1.5 - Min(1.5;\alpha))^2$	
		$0.75(1-\psi) \le \alpha < 1-\psi$	$f_1 = 0$ $f_2 = 1 + 2.31(\beta - 1) - 48\left(\frac{4}{3} - \beta\right)f_4^2$ $f_3 = 3f_4(\beta - 1)\left(\frac{f_4}{1.81} - \frac{\alpha - 1}{1.31}\right)$ $f_4 = (1.5 - Min(1.5;\alpha))^2$	
	$\psi < 1 - \frac{4\alpha}{3}$		$K_y = 5.972F_{tran}\frac{\beta^2}{1-f_3}$ where: $f_3 = f_5\left(\frac{f_5}{1.81} + \frac{1+3\psi}{5.24}\right)$ $f_5 = \frac{9}{16}(1 + Max(-1;\psi))^2$	

Case	Stress ratio ψ	Aspect ratio α	Buckling factor K	Reduction factor C
3 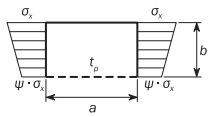	$1 \geq \psi \geq 0$		$K_x = \dfrac{4\,(0.425 + 1/\alpha^2)}{3\psi + 1}$	$C_x = 1$ for $\lambda \leq 0.7$ $C_x = \dfrac{1}{\lambda^2 + 0.51}$ for $\lambda > 0.7$
	$0 > \psi \geq -1$		$K_x = 4(0.425 + 1/\alpha^2)\,(1 + \psi) - 5\psi\,(1 - 3.42\psi)$	
4 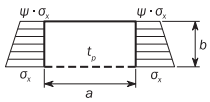	$1 \geq \psi \geq -1$		$K_x = \left(0.425 + \dfrac{1}{\alpha^2}\right)\dfrac{3 - \psi}{2}$	
5 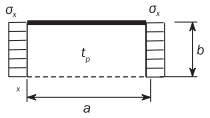	–	$\alpha \geq 1.64$	$K_x = 1.28$	
		$\alpha < 1.64$	$K_x = \dfrac{1}{\alpha^2} + 0.56 + 0.13\alpha^2$	
6 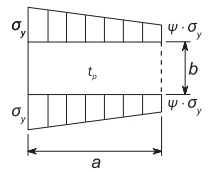	$1 \geq \psi \geq 0$		$K_y = \dfrac{4(0.425 + \alpha^2)}{(3\psi + 1)\alpha^2}$	$C_y = 1$ for $\lambda \leq 0.7$ $C_y = \dfrac{1}{\lambda^2 + 0.51}$ for $\lambda > 0.7$
	$0 > \psi \geq -1$		$K_y = 4(0.425 + \alpha^2)(1 + \psi)\dfrac{1}{\alpha^2} - 5\psi(1 - 3.42\psi)\dfrac{1}{\alpha^2}$	
7 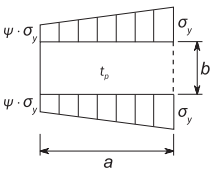	$1 \geq \psi \geq -1$		$K_y = (0.425 + \alpha^2)\dfrac{(3 - \psi)}{2\alpha^2}$	
8 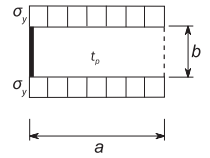	–		$K_y = 1 + \dfrac{0.56}{\alpha^2} + \dfrac{0.13}{\alpha^4}$	
9 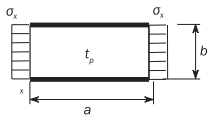	–		$K_x = 6.97$	$C_x = 1$ for $\lambda \leq 0.83$ $C_x = 1,13\left(\dfrac{1}{\lambda} - \dfrac{0.22}{\lambda^2}\right)$ for $\lambda > 0.83$

Case	Stress ratio ψ	Aspect ratio α	Buckling factor K	Reduction factor C
10 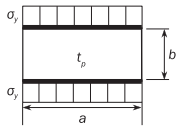	–		$K_y = 4 + \frac{2.07}{\alpha^2} + \frac{0.67}{\alpha^4}$	$C_y = 1$ for $\lambda \le 0.83$ $C_y = 1,13\left(\frac{1}{\lambda} - \frac{0.22}{\lambda^2}\right)$ for $\lambda > 0.83$
11 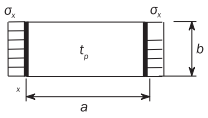	–	$\alpha \ge 4$	$K_x = 4$	$C_x = 1$ for $\lambda \le 0.83$ $C_x = 1,13\left(\frac{1}{\lambda} - \frac{0.22}{\lambda^2}\right)$ for $\lambda > 0.83$
		$\alpha < 4$	$K_x = 4 + 2.74\left[\frac{4-\alpha}{3}\right]^4$	
12 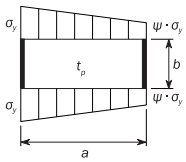	–		$K_y = K_y$ determined as per case 2	For $\alpha < 2$: $C_y = C_{y2}$ For $\alpha \ge 2$: $C_y = \left(1.06 + \frac{1}{10\alpha}\right)C_{y2}$ where: C_{y2} : C_y determined as per case 2
13 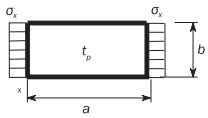	–	$\alpha \ge 4$	$K_x = 6.97$	$C_x = 1$ for $\lambda \le 0.83$ $C_x = 1,13\left(\frac{1}{\lambda} - \frac{0.22}{\lambda^2}\right)$ for $\lambda > 0.83$
		$\alpha < 4$	$K_x = 6.97 + 3.1\left[\frac{4-\alpha}{3}\right]^4$	
14 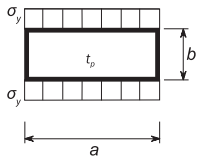	–		$K_y = \frac{6.97}{\alpha^2} + \frac{3.1}{\alpha^2}\left[\frac{4-1/\alpha}{3}\right]^4$	$C_y = 1$ for $\lambda \le 0.83$ $C_y = 1.13\left(\frac{1}{\lambda} - \frac{0.22}{\lambda^2}\right)$ for $\lambda > 0.83$

Case	Stress ratio ψ	Aspect ratio α	Buckling factor K	Reduction factor C
15 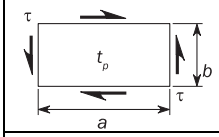	–		$K_\tau = \sqrt{3}\left[5.34 + \frac{4}{\alpha^2}\right]$	$C_\tau = 1$ for $\lambda \le 0.84$ $C_\tau = \frac{0.84}{\lambda}$ for $\lambda > 0.84$
16 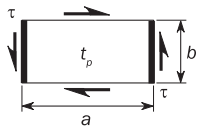	–		$K_\tau = \sqrt{3}\left\{5.34 + Max\left[\frac{4}{\alpha^2}\ ;\ \frac{7.15}{\alpha^{2.5}}\right]\right\}$	
17 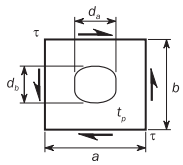	–		$K_\tau = K_{\tau case15}\, r$ $K_{\tau case15}$: K_τ according to case 15 r : Opening reduction factor taken as: $r = \left(1 - \frac{d_a}{a}\right)\left(1 - \frac{d_b}{b}\right)$ with $\frac{d_a}{a} \le 0.7$ and $\frac{d_b}{b} \le 0.7$	
18 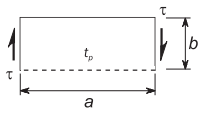	–		$K_\tau = \sqrt{3}(0.6 + 4/\alpha^2)$	$C_\tau = 1$ for $\lambda \le 0.84$ $C_\tau = \frac{0.84}{\lambda}$ for $\lambda > 0.84$
19 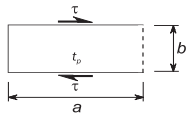	–		$K_\tau = 8$	

Edge boundary conditions:

- - - - - - - - - Plate edge free.

———————— Plate edge simply supported.

▬▬▬▬▬▬▬▬ Plate edge clamped.

Note 1: Cases listed are general cases. Each stress component (σ_x, σ_y) is to be understood in local coordinates.

Table 4 : Buckling and reduction factor for curved plate panel with $R/t_p \le 2500$

Case	Aspect ratio	Buckling factor K	Reduction factor C
1 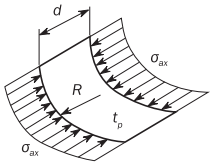	$\frac{d}{R} \le 0.5\sqrt{\frac{R}{t_p}}$	$K = 1 + \frac{2}{3}\frac{d^2}{Rt_p}$	For general application: $C_{ax} = 1$ for $\lambda \le 0.25$ $C_{ax} = 1.233 - 0.933\lambda$ for $0.25 < \lambda \le 1$ $C_{ax} = 0.3/\lambda^3$ for $1 < \lambda \le 1.5$ $C_{ax} = 0.2/\lambda^2$ for $\lambda > 1.5$ For curved single fields, e.g. bilge strake, which are bounded by plane panels as shown in Ch 6, Sec 4, Figure 1: $C_{ax} = \frac{0.65}{\lambda^2} \le 1.0$
	$\frac{d}{R} > 0.5\sqrt{\frac{R}{t_p}}$	$K = 0.267\frac{d^2}{Rt_p}\left[3 - \frac{d}{R}\sqrt{\frac{t_p}{R}}\right] \ge 0.4\frac{d^2}{Rt_p}$	
2a 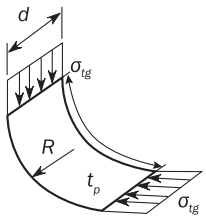 2b 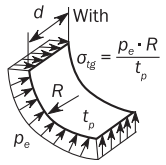 p_e = external pressure in [N/mm²]	$\frac{d}{R} \le 1.63\sqrt{\frac{R}{t_p}}$	$K = \frac{d}{\sqrt{Rt_p}} + 3\frac{(Rt_p)^{0.175}}{d^{0.35}}$	For general application: $C_{tg} = 1$ for $\lambda \le 0.4$ $C_{tg} = 1.274 - 0.686\lambda$ for $0.4 < \lambda \le 1.2$ $C_{tg} = \frac{0.65}{\lambda^2}$ for $\lambda > 1.2$ For curved single fields, e.g. bilge strake, which are bounded by plane panels as shown in Ch 6, Sec 4, Figure 1: $C_{tg} = \frac{0.8}{\lambda^2} \le 1.0$
	$\frac{d}{R} > 1.63\sqrt{\frac{R}{t_p}}$	$K = 0.3\frac{d^2}{R^2} + 2.25\left(\frac{R^2}{d\ t_p}\right)^2$	
3 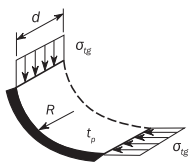	$\frac{d}{R} \le \sqrt{\frac{R}{t_p}}$	$K = \frac{0.6d}{\sqrt{Rt_p}} + \frac{\sqrt{Rt_p}}{d} - 0.3\frac{Rt_p}{d^2}$	As in load case 2a.
	$\frac{d}{R} > \sqrt{\frac{R}{t_p}}$	$K = 0.3\frac{d^2}{R^2} + 0.291\left(\frac{R^2}{d\ t_p}\right)^2$	
4 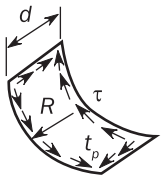	$\frac{d}{R} \le 8.7\sqrt{\frac{R}{t_p}}$	$K = \sqrt{3}\sqrt{28.3 + \frac{0.67\ d^3}{R^{1.5}\ t_p^{1.5}}}$	$C_\tau = 1$ for $\lambda \le 0.4$ $C_\tau = 1.274 - 0.686\lambda$ for $0.4 < \lambda \le 1.2$ $C_\tau = \frac{0.65}{\lambda^2}$ for $\lambda > 1.2$
	$\frac{d}{R} > 8.7\sqrt{\frac{R}{t_p}}$	$K = \sqrt{3}\frac{0.28d^2}{R\sqrt{Rt_p}}$	

Explanations for boundary conditions:

- - - - - - - - - Plate edge free.

——————— Plate edge simply supported.

▬▬▬▬▬ Plate edge clamped.

2.2.7 Applied normal and shear stresses to plate panels [RCN1 to 01 JAN 2020]

The normal stress, σ_x and σ_y, in N/mm^2, to be applied for the overall stiffened panel capacity and the plate panel capacity calculations as given in [2.1.1] and [2.2.1] respectively, are to be taken as follows:

- For FE analysis, the reference stresses as defined in Ch 8, Sec 4, [2.4].
- For prescriptive assessment, the axial or transverse compressive stresses calculated according to Ch 8, Sec 3, [2.2.1], at load calculation points of the considered elementary plate panel, as defined in Ch 3, Sec 7, [2].
- For grillage analysis where the stresses are obtained based on beam theory, the stresses taken as:

$$\sigma_x = \frac{\sigma_{xb} + \nu\sigma_{yb}}{1 - \nu^2}$$

$$\sigma_y = \frac{\sigma_{yb} + \nu\sigma_{xb}}{1 - \nu^2}$$

where:

σ_{xb}, σ_{yb} : Stress, in N/mm^2, from grillage beam analysis respectively along x or y axis of the attached plate of girders.

The shear stress τ, in N/mm^2, to be applied for the overall stiffened panel capacity and the plate panel capacity calculations as given in [2.1.1] and [2.2.1] respectively, are to be taken as follows:

- For FE analysis, the reference shear stresses as defined in Ch 8, Sec 4, [2.4].
- For prescriptive assessment of the plate panel capacity, the shear stresses calculated according to Ch 8, Sec 3, [2.2.1], at load calculation points of the considered elementary plate panel, as defined in Ch 3, Sec 7, [2].
- For prescriptive assessment of the overall stiffened panel capacity, the shear stresses calculated according to Ch 8, Sec 3, [2.2.1], at the following load calculation point:
  - At the middle of the full span, ℓ, of the considered stiffener.
  - At the intersection point between the stiffener and its attached plating.
- For grillage beam analysis, $\tau = 0$ in the attached plate of girders.

[RCN1 to 01 JAN 2020]

2.3 Stiffeners

2.3.1 Buckling modes

The following buckling modes are to be checked:

- Stiffener induced failure (*SI*).
- Associated plate induced failure (*PI*).

2.3.2 Web thickness of flat bar

For accounting the decrease of the stiffness due to local lateral deformation, the effective web thickness of flat bar stiffener, in mm, is to be used in [2.1] and [2.3.4] for the calculation of the net sectional area, A_s, the net section modulus, Z and the moment of inertia, I, of the stiffener and is taken as:

$$t_{w_red} = t_w \left(1 - \frac{2\pi^2}{3}\left(\frac{h_w}{s}\right)^2 \left(1 - \frac{b_{eff1}}{s}\right)\right)$$

[RCN1 to 01 JAN 2020]

2.3.3 Idealisation of bulb profile

Bulb profiles are to be considered as equivalent angle profiles, as defined in Ch 3, Sec 7, [1.4.1].

2.3.4 Ultimate buckling capacity

When $\sigma_a + \sigma_b + \sigma_w > 0$, the ultimate buckling capacity for stiffeners is to be checked according to the following interaction formula:

$$\frac{\gamma_c\ \sigma_a + \sigma_b + \sigma_w}{R_{eH}}\ S = 1$$

where:

σ_a : Effective axial stress, in N/mm^2, at mid span of the stiffener, acting on the stiffener with its attached plating.

$$\sigma_a = \sigma_x \frac{s\ t_p + A_s}{b_{eff1}\ t_p + A_s}$$

σ_x : Nominal axial stress, in N/mm^2, acting on the stiffener with its attached plating.

- For FE analysis, σ_x is the FE corrected stress as defined in [2.3.6] in the attached plating in the direction of the stiffener axis.
- For prescriptive assessment, σ_x is the axial stress calculated according to Ch 8, Sec 3, [2.2.1] at load calculation point of the stiffener, as defined in Ch 3, Sec 7, [3].
- For grillage beam analysis, σ_x is the stress acting along the x-axis of the attached buckling panel.

R_{eH} : Specified minimum yield stress of the material, in N/mm^2:

$R_{eH} = R_{eH_S}$ for stiffener induced failure (*SI*).

$R_{eH} = R_{eH_P}$ for plate induced failure (*PI*).

σ_b : Bending stress in the stiffener, in N/mm^2:

$$\sigma_b = \frac{M_0 + M_1}{1000Z}$$

Z : Net section modulus of stiffener, in cm^3, including effective width of plating according to [2.3.5], to be taken as:

- The section modulus calculated at the top of stiffener flange for stiffener induced failure (*SI*).
- The section modulus calculated at the attached plating for plate induced failure (*PI*).

C_{PI} : Plate induced failure pressure coefficient:

C_{PI} = 1 if the lateral pressure is applied on the side opposite to the stiffener.

C_{PI} = -1 if the lateral pressure is applied on the same side as the stiffener.

C_{SI} : Stiffener induced failure pressure coefficient:

C_{SI} = -1 if the lateral pressure is applied on the side opposite to the stiffener.

C_{SI} = 1 if the lateral pressure is applied on the same side as the stiffener.

M_1 : Bending moment, in Nmm, due to the lateral load *P*:

$$M_1 = C_i \frac{|P| s \ell^2}{24 \times 10^3} \quad \text{for continuous stiffener}$$

$$M_1 = C_i \frac{|P| s \ell^2}{8 \times 10^3} \quad \text{for sniped stiffener}$$

$$M_1 = C_i \frac{|P| s \ell^2}{14.2 \times 10^3}$$ for stiffener sniped at one end and continuous at the other end

P : Lateral load, in kN/m^2.

- For FE analysis, P is the average pressure as defined in Ch 8, Sec 4, [2.5.2] in the attached plating.
- For prescriptive assessment, P is the pressure calculated at load calculation point of the stiffener, as defined in Ch 3, Sec 7, [3].

C_i : Pressure coefficient:

$C_i = C_{SI}$ for stiffener induced failure (*SI*).

$C_i = C_{PI}$ for plate induced failure (*PI*).

M_0 : Bending moment, in Nmm, due to the lateral deformation w of stiffener:

$$M_0 = F_E \frac{\gamma}{\gamma_{GEB} - \gamma} w_0$$ with precondition $\gamma_{GEB} - \gamma > 0$

where γ_{GEB} is the stress multiplier factor of global elastic buckling capacity as defined in [2.1].

F_E : Ideal elastic buckling force of the stiffener, in N.

$$F_E = \left(\frac{\pi}{\ell}\right)^2 E\, I\, 10^4$$

I : Moment of inertia, in cm^4, of the stiffener including effective width of attached plating according to [2.3.5]. I is to comply with the following requirement:

$$I \geq \frac{s\, t_p^3}{12 \times 10^4}$$

t_p : Net thickness of plate, in mm, to be taken as

- For prescriptive requirements: the mean thickness of the two attached plating panels,
- For FE analysis: the thickness of the considered EPP on one side of the stiffener.

w_0 : Assumed imperfection, in mm, to be taken as:

$w_0 = \ell / 1000$ in general.

$w_0 = -w_{na}$ for stiffeners sniped at one or both ends considering stiffener induced failure (*SI*).

$w_0 = w_{na}$ for stiffeners sniped at one or both ends considering plate induced failure (*PI*).

w_{na}: : Distance from the mid-point of attached plating to the neutral axis of the stiffener calculated with the effective width of the attached plating according to [2.3.5].

σ_w : Stress due to torsional deformation, in N/mm^2, to be taken as:

$$\sigma_w = E y_w \left(\frac{t_f}{2} + h_w\right) \Phi_0 \left(\frac{m_{tor}\pi}{\ell_{tor}}\right)^2 \left(\frac{1}{1 - \frac{\gamma \sigma_a}{\sigma_{ET}}} - 1\right)$$

with precondition $\sigma_{ET} - \gamma \sigma_a > 0$ for stiffener induced failure (*SI*).

ℓ_{tor} : Stiffener span, distance equal to spacing between primary supporting members, i.e. $\ell_{tor} = \ell$. When the stiffener is supported by tripping brackets, ℓ_{tor} should be taken as the maximum spacing between the adjacent primary supporting members and fitted tripping brackets.

y_w : Distance, in mm, from centroid of stiffener cross section to the free edge of stiffener flange, to be taken as:

$$y_w = \frac{t_w}{2}$$ for flat bar.

$$y_w = b_f - \frac{h_w\, t_w^2 + t_f\, b_f^2}{2A_s}$$ for angle and bulb profiles.

$$y_w = b_{f-out} + 0.5t_w - \frac{h_w t_w^2 + t_f(b_f^2 - 2b_f d_f)}{2A_s}$$ for L2 profile

$$y_w = b_{f-out} + 0.5t_w - \frac{(h_w - t_f)t_w^2 + t_f(b_f + t_w)^2}{2A_s}$$ for L3 profile

$$y_w = \frac{b_f}{2}$$ for T profile.

Φ_0 : Coefficient taken as:

$$\Phi_0 = \frac{\ell_{tor}}{m_{tor} h_w}\, 10^{-4}$$

σ_{ET} : Reference stress for torsional buckling, in N/mm^2, to be taken as:

$$\sigma_{ET} = \frac{E}{I_P}\left[\left(\frac{m_{tor}\pi}{\ell_{tor}}\right)^2 I_w \cdot 10^2 + \frac{1}{2(1+v)} I_T + \left(\frac{\ell_{tor}}{m_{tor}\pi}\right)^2 \varepsilon \cdot 10^{-4}\right]$$

I_P : Net polar moment of inertia of the stiffener, in cm^4, about point *C* as shown in Figure 1, as defined in Table 5.

I_T : Net St. Venant's moment of inertia of the stiffener, in cm^4, as defined in Table 5.

I_ω : Net sectorial moment of inertia of the stiffener, in cm^6, about point *C* as shown in Figure 1, as defined in Table 5.

m_{tor} : Number of half waves within ℓ_{tor}, taken as a positive integer so as to give smallest reference stress for torsional buckling.

Table 5 : Moments of inertia

	Flat bars (1)	Bulb, angle, L2, L3 and T profiles
I_P	$\frac{h_w^3\, t_w}{3\times10^4}$	$\left(\frac{A_w\,(e_f - 0.5t_f)^2}{3} + A_f\, e_f^2\right) 10^{-4}$
I_T	$\frac{h_w\, t_w^3}{3\times10^4}\left(1 - 0.63\,\frac{t_w}{h_w}\right)$	$\frac{(e_f - 0.5t_f)\, t_w^3}{3\times10^4}\left(1 - 0.63\,\frac{t_w}{e_f - 0.5t_f}\right) + \frac{b_f\, t_f^3}{3\cdot10^4}\left(1 - 0.63\,\frac{t_f}{b_f}\right)$
I_ω	$\frac{h_w^3\, t_w^3}{36\times10^6}$	for bulb, angle, L2 and L3 profiles $\frac{A_f^3 + A_w^3}{36\cdot10^6} + \frac{e_f^2}{10^6}\left(\frac{A_f b_f^2 + A_w t_w^2}{3} - \frac{(A_f b_f + A_w t_w)^2}{4(A_f + A_w)}\right)$ for T profiles $\frac{b_f^3\, t_f\, e_f^2}{12\times10^6}$
(1) t_w is the net web thickness, in mm. t_{w_red} as defined in [2.3.2] is not to be used in this table.		
[RCN1 to 01 JAN 2020]		

ε : Degree of fixation, in mm^2, to be taken as:.

$$\varepsilon = \left(\frac{3b}{t_p^3} + \frac{2h_w}{t_w^3}\right)^{-1}$$ for bulb, angle, L2, L3 and T profiles;

$$\varepsilon = \frac{t_p^3}{3b}$$ for flat bars.

A_W : Net web area, in mm^2.

A_f : Net flange area, in mm^2.

[RCN1 to 01 JAN 2020]

2.3.5 Effective width of attached plating

The effective width of attached plating of stiffeners, b_{eff}, in mm, is to be taken as:

- For $\sigma_x > 0$:
  - For FE analysis,

    $$b_{eff} = min\ (C_x\ b, \chi_s\ s)$$

  - For prescriptive assessment,

    $$b_{eff} = min\left(\frac{C_{x1}\ b_1 + C_{x2}\ b_2}{2}, \chi_s\ s\right)$$

- For $\sigma_x \le 0$:
  - $b_{eff} = \chi_s\ s$

where:

χ_s : Effective width coefficient to be taken as:

$$\chi_s = min\left[\frac{1.12}{1 + \frac{1.75}{\left(\frac{\ell_{eff}}{s}\right)^{1.6}}}; 1.0\right] \text{ for } \frac{\ell_{eff}}{s} \ge 1$$

$$\chi_s = 0.407\frac{\ell_{eff}}{s} \quad \text{for } \frac{\ell_{eff}}{s} < 1$$

ℓ_{eff} : Effective length of the stiffener, in mm, taken as:

$$\ell_{eff} = \frac{\ell}{\sqrt{3}}$$ for stiffener fixed at both ends.

$\ell_{eff} = 0.75\ell$ for stiffener simply supported at one end and fixed at the other.

$\ell_{eff} = \ell$ for stiffener simply supported at both ends.

2.3.6 FE corrected stresses for stiffener capacity

When the reference stresses σ_x and σ_y obtained by FE analysis according to Ch 8, Sec 4, [2.4] are both compressive, σ_x is to be corrected according to the following formula:

- If $\sigma_x < \nu\sigma_y$:

  $$\sigma_{xcor} = 0$$

- If $\sigma_x \geq \nu\sigma_y$:

$$\sigma_{xcor} = \sigma_x - \nu\sigma_y$$

[RCN1 to 01 JAN 2020]

2.4 Primary supporting members

2.4.1 Web plate in way of openings

The web plate of primary supporting members with openings is to be assessed for buckling based on the combined axial compressive and shear stresses.

The web plate adjacent to the opening on both sides is to be considered as individual unstiffened plate panels as shown in Table 6.

The interaction formulae of [2.2.1] are to be used with:

- $\sigma_x = \sigma_{av}$
- $\sigma_y = 0$
- $\tau = \tau_{av}$

where:

σ_{av} : Weighted average compressive stress, in N/mm^2, in the area of web plate being considered, i.e. *P1*, *P2* or *P3* as shown in Table 6.

For the application of the Table 6, the weighted average shear stress is to be taken as:

- Opening modelled in primary supporting members:

  τ_{av} : Weighted average shear stress, in N/mm^2, in the area of web plate being considered, i.e. *P1*, *P2* or *P3* as shown in Table 6.

- Opening not modelled in primary supporting members:

  τ_{av} : Weighted average shear stress, in N/mm^2, given in Table 6.

2.4.2 Reduction factors of web plate in way of openings

The reduction factors, C_x or C_y in combination with, C_τ of the plate panel(s) of the web adjacent to the opening is to be taken as shown in Table 6.

2.4.3

The equivalent plate panel of web plate of primary supporting members crossed by perpendicular stiffeners is to be idealised as shown in Figure 2.

Figure 2 : Web plate idealisation

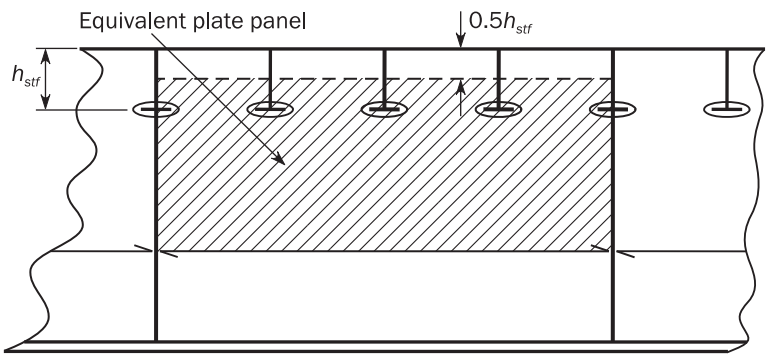

The correction of panel breadth is applicable also for other slot configurations provided that the web or collar plate is attached to at least one side of the passing stiffener.

Table 6 : Reduction factors

Configuration	C_x, C_y	C_τ	
		Opening modelled in PSM	Opening not modelled in PSM
(a) Without edge reinforcements: 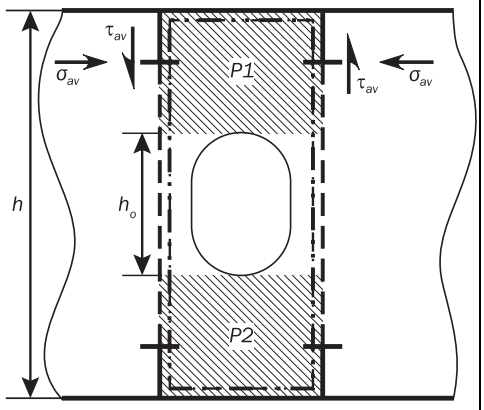 	Separate reduction factors are to be applied to areas *P1* and *P2* using case 3 or case 6 in Table 3, with edge stress ratio: $\psi = 1.0$	Separate reduction factors are to be applied to areas *P1* and *P2* using case 18 or case 19 in Table 3.	When case 17 of Table 3 is applicable: A common reduction factor is to be applied to areas *P1* and *P2* using case 17 in Table 3 with: $\tau_{av} = \tau_{av}(web)$ When case 17 of Table 3 is not applicable: Separate reduction factors are to be applied to areas *P1* and *P2* using case 18 or case 19 in Table 3 with: $\tau_{av} = \tau_{av}(web)\ h/(h - h_0)$
(b) With edge reinforcements: 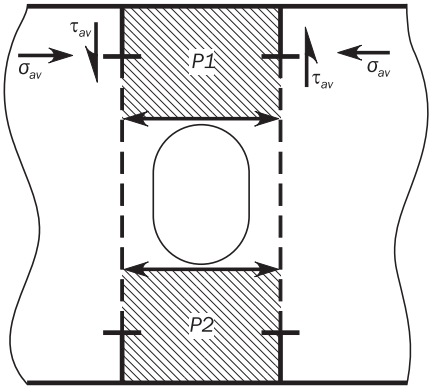 	Separate reduction factors are to be applied for areas *P1* and *P2* using C_x for case 1 or C_y for case 2 in Table 3 with stress ratio: $\psi = 1.0$	Separate reduction factors are to be applied for areas *P1* and *P2* using case 15 in Table 3.	Separate reduction factors are to be applied to areas *P1* and *P2* using case 15 in Table 3 with: $\tau_{av} = \tau_{av}\ (web)\ h/(h - h_0)$
(c) Example of hole in web: 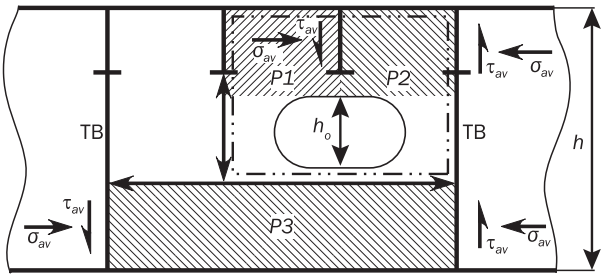 		Panels *P1* and *P2* are to be evaluated in accordance with (a). Panel *P3* is to be evaluated in accordance with (b).	

Where:

h : Height, in m, of the web of the primary supporting member in way of the opening.

h_0 : Height, in m, of the opening measured in the depth of the web.

$\tau_{av}(web)$: Weighted average shear stress, in N/mm^2 over the web height *h* of the primary supporting member.

Note 1: Web panels to be considered for buckling in way of openings are shown shaded and numbered *P1*, *P2*, etc.

3 BUCKLING CAPACITY OF OTHER STRUCTURES

3.1 Struts, pillars and cross ties

3.1.1 Buckling utilisation factor

The buckling utilisation factor, η, for axially compressed struts, pillars and cross ties is to be taken as:

$$\eta = \frac{\sigma_{av}}{\sigma_{cr}}$$

where:

σ_{av} : Average axial compressive stress in the member, in N/mm^2.

σ_{cr} : Minimum critical buckling stress, in N/mm^2, taken as:

$$\sigma_{cr} = \sigma_E \quad \text{for} \quad \sigma_E \le 0.5 R_{eH_S}$$

$$\sigma_{cr} = \left(1 - \frac{R_{eH_S}}{4\sigma_E}\right) R_{eH_S} \quad \text{for} \quad \sigma_E > 0.5 R_{eH_S}$$

σ_E : Minimum elastic compressive buckling stress, in N/mm^2, according to [3.1.2] to [3.1.4].

R_{eH_S} : Specified minimum yield stress of the considered member, in N/mm^2. For built up members, the lowest specified minimum yield stress is to be used.

3.1.2 Elastic column buckling stress

The elastic compressive column buckling stress, σ_{EC}, in N/mm^2 of members subject to axial compression is to be taken as:

$$\sigma_{EC} = \pi^2 E f_{end} \frac{I}{A\ \ell_{pill}^2} 10^{-4}$$

where:

I : Net moment of inertia about the weakest axis of the cross section, in cm^4.

A : Net cross sectional area of the member, in cm^2.

ℓ_{pill} : Length of the member, in m, taken as:

- For pillar and strut: unsupported length of the member
- For cross tie:
  - In centre tank: distance between the flanges of longitudinal stiffeners on the starboard and port longitudinal bulkheads to which the cross tie's horizontal stringer is attached.
  - In wing tank: distance between the flanges of longitudinal stiffeners on the longitudinal bulkhead to which the cross tie's horizontal stringer is attached, and the inner hull plating.

f_{end} : End constraint factor, taken as:

- For pillar and strut:
  - f_{end} = 1.0 where both ends are simply supported.
  - f_{end} = 2.0 where one end is simply supported and the other end is fixed.
  - f_{end} = 4.0 where both ends are fixed.
- For cross tie:
  - f_{end} = 2.0

A pillar end may be considered fixed when brackets of adequate size are fitted. Such brackets are to be supported by structural members with greater bending stiffness than the pillar.

3.1.3 Elastic torsional buckling stress

The elastic torsional buckling stress, σ_{ET}, in N/mm^2, with respect to axial compression of members is to be taken as:

$$\sigma_{ET} = \frac{GI_{sv}}{I_{pol}} + \frac{\pi^2 f_{end} Ec_{warp}}{I_{pol} \ell_{pill}^2} 10^{-4}$$

where:

I_{sv} : Net St. Venant's moment of inertia, in cm^4, see Table 7 for examples of cross sections.

I_{pol} : Net polar moment of inertia about the shear centre of cross section, in cm^4

$$I_{pol} = I_y + I_z + A\ (y_0^2 + z_0^2)$$

c_{warp} : Warping constant, in cm^6, see Table 7 for examples of cross sections.

ℓ_{pill} : Length of the member, in m as defined in [3.1.2].

y_0 : Transverse position of shear centre relative to the cross sectional centroid, in cm, see Table 7 for examples of cross sections.

z_0 : Vertical position of shear centre relative to the cross sectional centroid, in cm, see Table 7 for examples of cross sections.

A : Net cross sectional area, in cm^2, as defined in [3.1.2]

I_y : Net moment of inertia about y axis, in cm^4.

I_z : Net moment of inertia about z axis, in cm^4.

Table 7 : Cross sectional properties

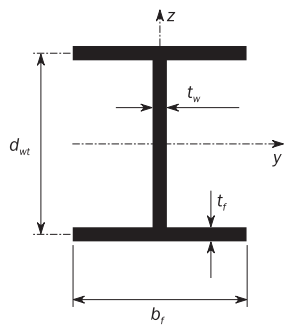	$I_{sv} = \frac{1}{3}(2b_f t_f^3 + d_{wt} t_w^3)\ 10^{-4}$	cm^4
	$c_{warp} = \frac{d_{wt}^2 b_f^3 t_f}{24} 10^{-6}$	cm^6
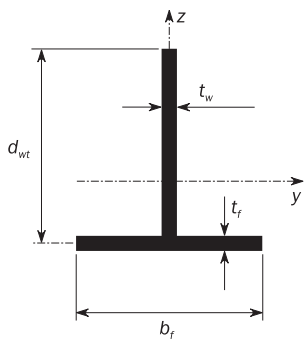	$I_{sv} = \frac{1}{3}(b_f t_f^3 + d_{wt} t_w^3)\ 10^{-4}$	cm^4
	$y_0 = 0$	cm
	$z_0 = -\frac{0.5 d_{wt}^2 t_w}{d_{wt} t_w + b_f t_f} 10^{-1}$	cm
	$c_{warp} = \frac{b_f^3 t_f^3 + 4 d_{wt}^3 t_w^3}{144} 10^{-6}$	cm^6

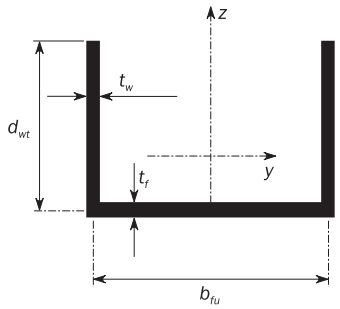	$I_{sv} = \frac{1}{3}\,(b_{fu}\,t_f^3 + 2d_{wt}\,t_w^3)\,10^{-4}$	cm^4
	$y_0 = 0$	cm
	$z_0 = -\frac{d_{wt}^2\,t_w\,10^{-1}}{2d_{wt}\,t_w + b_{fu}\,t_f} - \frac{0.5d_{wt}^2\,t_w\,10^{-1}}{d_{wt}\,t_w + b_{fu}\,t_f/6}$	cm
	$c_{warp} = \frac{b_{fu}^2\,d_{wt}^3\,t_w\,(3d_{wt}\,t_w + 2b_{fu}\,t_f)}{12(6d_{wt}\,t_w + b_{fu}\,t_f)}\,10^{-6}$	cm^6
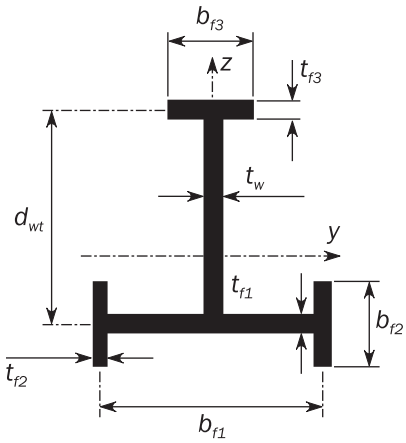	$I_{sv} = \frac{1}{3}\,(b_{f1}\,t_{f1}^3 + 2b_{f2}\,t_{f2}^3 + b_{f3}\,t_{f3}^3 + d_{wt}\,t_w^3)\,10^{-4}$	cm^4
	$y_0 = 0$	cm
	$z_0 = z_s - \frac{(b_{f3}\,d_{wt}\,t_{f3} + 0.5d_{wt}^2\,t_w)\,10^{-1}}{d_{wt}\,t_w + b_{f1}\,t_{f1} + 2b_{f2}\,t_{f2} + b_{f3}\,t_{f3}}$	cm
	$c_{warp} = \left(I_{f1}\,z_s^2 + \frac{I_{f2}\,b_{f1}^2}{200} + I_{f3}\left(\frac{d_{wt}}{10} - z_s\right)^2\right)$	cm^6
	$I_{f1} = \left(\frac{(b_{f1} - t_{f2})^3\,t_{f1}}{12} + \frac{b_{f2}\,t_{f2}\,b_{f1}^2}{2}\right)10^{-4}$	cm^4
	$I_{f2} = \frac{b_{f2}^3\,t_{f2}}{12}\,10^{-4}$	cm^4
	$I_{f3} = \frac{b_{f3}^3\,t_{f3}}{12}\,10^{-4}$	cm^4
	$z_s = \frac{I_{f3}\,d_{wt}}{I_{f1} + I_{f3}}\,10^{-1}$	cm

Note 1: All dimensions are in mm.

Note 2: Cross sectional properties are given for typical cross sections. Properties for other cross sections are to be determined by direct calculation.

3.1.4 Elastic torsional/column buckling stress

For cross sections where the centroid and the shear centre do not coincide, the interaction between the torsional and column buckling mode is to be examined. The elastic torsional/column buckling stress, σ_{ETF}, with respect to axial compression is to be taken as:

$$\sigma_{ETF} = \frac{1}{2\zeta}\left[(\sigma_{EC} + \sigma_{ET}) - \sqrt{(\sigma_{EC} + \sigma_{ET})^2 - 4\zeta\,\sigma_{EC}\,\sigma_{ET}}\right]$$

where:

ζ : Coefficient taken as:

$$\zeta = 1 - \frac{(y_0^2 + z_0^2)\,A}{I_{pol}}$$

y_0 : Transverse position of shear centre relative to the cross sectional centroid, in cm, as defined in [3.1.3].

z_0 : Vertical position of shear centre relative to the cross sectional centroid, in cm, as defined in [3.1.3].

A : Net cross sectional area, in cm^2, as defined in [3.1.2].

I_{pol} : Net polar moment of inertia about the shear centre of cross section, in cm^4 as defined in [3.1.3].

σ_{EC} : Elastic column compressive buckling stress, as defined in [3.1.2].

σ_{ET} : Elastic torsional buckling stress, as defined in [3.1.3].

3.2 Corrugated bulkhead

3.2.1

The buckling utilisation factor of flange and web of corrugation of corrugated bulkheads is based on the combination of in plane stresses and shear stress.

The interaction curve of [2.2.1] is to be used with the following coefficients:

- $\alpha = 2$
- $\psi_x = \psi_y = 1$

APPENDIX 1
STRESS BASED REFERENCE STRESSES

SYMBOLS

For symbols not defined in this section, refer to Ch 1, Sec 4.

a : Length, in mm, of the longer side of the plate panel as defined in Sec 5.

b : Length, in mm, of the shorter side of the plate panel as defined in Sec 5.

A_i : Area, in mm^2, of the *i*-th plate element of the buckling panel.

n : Number of plate elements in the buckling panel.

σ_{xi} : Actual stress, in N/mm^2, at the centroid of the *i*-th plate element in x direction, applied along the shorter edge of the buckling panel.

σ_{yi} : Actual stress, in N/mm^2, at the centroid of the *i*-th plate element in y direction, applied along the longer edge of the buckling panel.

ψ : Edge stress ratio as defined in Sec 5.

τ_i : Actual membrane shear stress, in N/mm^2, at the centroid of the *i*-th plate element of the buckling panel.

1 STRESS BASED METHOD

1.1 Introduction

1.1.1

This section provides a method to determine stress distribution along edges of the considered buckling panel by 2nd order polynomial curve, by linear distribution using least square method and by weighted average approach. This method is called Stress based Method.

The reference stress is the stress components at centre of plate element transferred into the local system of the considered buckling panel.

1.1.2 Definition

A regular panel is a plate panel of rectangular shape. An irregular panel is plate panel which is not regular, as detailed in Ch 8, Sec 4, [2.3.1].

1.2 Stress application

1.2.1 Regular panel

The reference stresses are to be taken as defined in [2.1] for a regular panel when the following conditions are satisfied:

- At least, one plate element centre is located in each third part of the long edge *a* of a regular panel and
- This element centre is located at a distance in the panel local x direction not less than *a*/4 to at least one of the element centres in the adjacent third part of the panel.

Otherwise, the reference stresses are to be taken as defined in [2.2] for an irregular panel.

1.2.2 Irregular panel and curved panel

The reference stresses of an irregular panel or of a curved panel are to be taken as defined in [2.2].

2 REFERENCE STRESSES

2.1 Regular Panel

2.1.1 Longitudinal stress

The longitudinal stress σ_x applied on the shorter edge of the buckling panel is to be calculated as follows:

- For plate buckling assessment, the distribution of $\sigma_x(x)$ is assumed as 2nd order polynomial curve as:

$$\sigma_x(x) = C \cdot x^2 + D \cdot x + E$$

The best fitting curve $\sigma_x(x)$ is to be obtained by minimising the square error Π considering the area of each element as a weighting factor.

$$\Pi = \sum_{i=1}^{n} A_i[\sigma_{ix} - (Cx_i^2 + Dx_i + E)]^2$$

The unknown coefficients *C*, *D* and *E* must yield zero first derivatives, $\partial\Pi$ with respect to *C*,*D* and *E* respectively.

$$\begin{cases} \dfrac{\partial\Pi}{\partial C} = 2\sum_{i=1}^{n} A_i x_i^2[\sigma_{ix} - (Cx_i^2 + Dx_i + E)] = 0 \\ \dfrac{\partial\Pi}{\partial D} = 2\sum_{i=1}^{n} A_i x_i[\sigma_{ix} - (Cx_i^2 + Dx_i + E)] = 0 \\ \dfrac{\partial\Pi}{\partial E} = 2\sum_{i=1}^{n} A_i[\sigma_{ix} - (Cx_i^2 + Dx_i + E)] = 0 \end{cases}$$

The unknown coefficients *C*, *D* and *E* can be obtained by solving the 3 above equations.

$$\sigma_{x1} = \frac{1}{b}\int_0^b \sigma_x(x)dx = \frac{b^2}{3}C + \frac{b}{2}D + E$$

$$\sigma_{x2} = \frac{1}{b}\int_{a-b}^{a} \sigma_x(x)dx = \left(a^2 - ab + \frac{b^2}{3}\right)C + \left(a - \frac{b}{2}\right)D + E$$

If $-D/2C < b/2$ or $-D/2C > a-b/2$, σ_{x3} is to be ignored. Otherwise, σ_{x3} is taken as:

$$\sigma_{x3} = \frac{1}{b}\int_{xmin}^{xmax} \sigma_x(x)dx = \frac{b^2}{12}C - \frac{D^2}{4C} + E$$

where:

$$x_{min} = -\frac{b}{2} - \frac{D}{2C}$$

$$x_{max} = \frac{b}{2} - \frac{D}{2C}$$

The longitudinal stress is to be taken as:

$$\sigma_x = max(\sigma_{x1};\sigma_{x2};\sigma_{x3})$$

The edge stress ratio is to be taken as:

$$\psi_x = 1$$

- For overall stiffened panel buckling and stiffener buckling assessments, $\sigma_x(x)$ applied on the shorter edge of the attached plate is to be taken as:

$$\sigma_x = \frac{\sum_1^n A_i \, \sigma_{xi}}{\sum_1^n A_i}$$

The edge stress ratio ψ_x for the stress σ_x is equal to 1.0.

[RCN1 to 01 JAN 2020]

2.1.2 Transverse stress

The transverse stress σ_y applied along the longer edges of the buckling panel is to be calculated by extrapolation of the transverse stresses of all elements up to the shorter edges of the considered buckling panel.

Figure 1 : Buckling panel

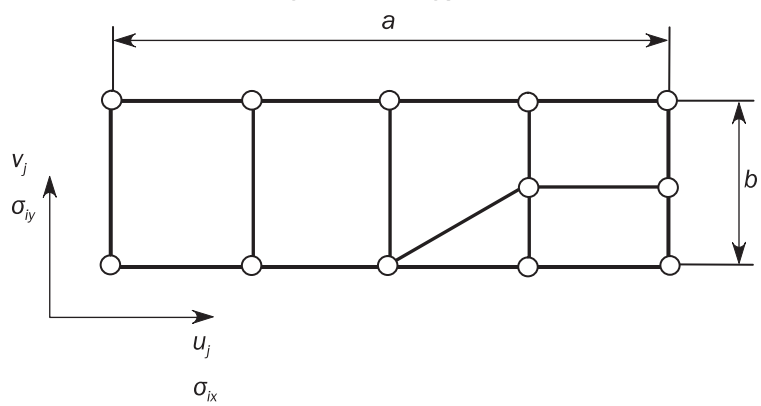

The distribution of $\sigma_y(x)$ is assumed as straight line. Therefore:

$$\sigma_y(x) = A + Bx$$

The best fitting curve $\sigma_y(x)$ is to be obtained by the least square method minimising the square error Π considering area of each element as a weighting factor.

$$\Pi = \sum_{i=1}^{n} A_i \, [\sigma_{iy} - (A + Bx_i)]^2$$

The unknown coefficients C and D must yield zero first partial derivatives, $\partial\Pi$ with respect to C and D, respectively.

$$\begin{cases} \dfrac{\partial \Pi}{\partial A} = 2\sum_{i=1}^{n} A_i\,[\sigma_{iy} - (A + Bx_i)] = 0 \\ \dfrac{\partial \Pi}{\partial B} = 2\sum_{i=1}^{n} A_i\,x_i\,[\sigma_{iy} - (A + Bx_i)] = 0 \end{cases}$$

The unknown coefficients A and *B* are obtained by solving the 2 above equations and are given as follow:

$$\begin{cases} A = \dfrac{\left(\sum_{i=1}^{n} A_i\,\sigma_{iy}\right)\left(\sum_{i=1}^{n} A_i\,x_i^2\right) - \left(\sum_{i=1}^{n} A_i\,x_i\right)\left(\sum_{i=1}^{n} A_i\,x_i\,\sigma_{iy}\right)}{\left(\sum_{i=1}^{n} A_i\right)\left(\sum_{i=1}^{n} A_i\,x_i^2\right) - \left(\sum_{i=1}^{n} A_i\,x_i\right)^2} \\ B = \dfrac{\left(\sum_{i=1}^{n} A_i\right)\left(\sum_{i=1}^{n} A_i\,x_i\,\sigma_{iy}\right) - \left(\sum_{i=1}^{n} A_i\,x_i\right)\left(\sum_{i=1}^{n} A_i\,\sigma_{iy}\right)}{\left(\sum_{i=1}^{n} A_i\right)\left(\sum_{i=1}^{n} A_i\,x_i^2\right) - \left(\sum_{i=1}^{n} A_i\,x_i\right)^2} \end{cases}$$

$$\sigma_y = max\,(A, A + Ba)$$

$$\psi_y = \frac{min\,(A, A + Ba)}{max\,(A, A + Ba)} \quad \text{for } \sigma_y \geq 0$$

$$\psi_y = 1 \quad \text{for } \sigma_y < 0$$

2.1.3 Shear stress

The shear stress τ is to be calculated using a weighted average approach, and is to be taken as:

$$\tau = \frac{\sum_{1}^{n} A_i\,\tau_i}{\sum_{1}^{n} A_i}$$

2.2 Irregular panel and curved panel

2.2.1 Reference stresses

The longitudinal, transverse and shear stresses are to be calculated using a weighted average approach. They are to be taken as:

$$\sigma_x = \frac{\sum_{1}^{n} A_i\,\sigma_{xi}}{\sum_{1}^{n} A_i}$$

$$\sigma_y = \frac{\sum_{1}^{n} A_i\,\sigma_{yi}}{\sum_{1}^{n} A_i}$$

$$\tau = \frac{\sum_{1}^{n} A_i \, \tau_i}{\sum_{1}^{n} A_i}$$

The edge stress ratios are to be taken as:

$\psi_x = 1$

$\psi_y = 1$

PART 1 CHAPTER 9

FATIGUE

Table of Contents

SECTION 1
General Considerations
1 Rule Application for Fatigue Requirements
2 Definition
3 Assumptions
4 Methodology
5 Corrosion Model
6 Loading Conditions
7 Load Cases
SECTION 2
Structural Details to be Assessed
1 Simplified Stress Analysis
2 Finite Element Analysis
SECTION 3
Fatigue Evaluation
1 Fatigue Analysis Methodology
2 Acceptance Criteria
3 Reference Stresses for Fatigue Assessment
4 S-N Curves
5 Fatigue Damage Calculation
6 Weld Improvement Methods
7 Workmanship
SECTION 4
Simplified Stress Analysis
1 General
2 Hot Spot Stress
3 Hull Girder Stress
4 Local Stiffener Stress
5 Stress Concentration Factors
SECTION 5
Finite Element Stress Analysis
1 General
2 FE Modelling
3 Hot Spot Stress for Details Different From Web-Stiffened Cruciform Joints
4 Hot Spot Stress for Web-Stiffened Cruciform Joint
5 Limitations of Hot Spot Stress Approach
6 Screening Fatigue Assessment

SECTION 6
Detail Design Standard

1 General
2 Stiffener-Frame Connections
3 Scallops in way of Block Joints
4 Hopper Knuckle Connection
5 Horizontal Stringer Heel
6 Bulkhead Connection to Lower and Upper Stool
7 Bulkhead Connection to Inner Bottom
8 Lower and Upper Toe of Hold Frame
9 Hatch Corner

SECTION 1
GENERAL CONSIDERATIONS

SYMBOLS

For symbols not defined in this section, refer to Ch 1, Sec 4.

T_{DF} : Design fatigue life, in year, specified by the designer, but not to be taken less than 25 years.

1 RULE APPLICATION FOR FATIGUE REQUIREMENTS

1.1 Scope

1.1.1 General

This chapter provides requirements applicable to ships having rule length *L* between 150 m and 500 m to evaluate fatigue strength of the ship's structural details considering an operation time in North Atlantic environment equal to the design fatigue life, T_{DF}.

1.1.2 Assessed area

Fatigue assessment is performed for structural details located in the ship's cargo hold region in order to prevent the following types of fatigue failure:

- Fatigue cracks initiating from the toe of the weld and propagating into the plate.
- Fatigue cracks initiating from free edge of non-welded details.

1.1.3 Structural details to be assessed

The structural details required for fatigue assessment are given in Ch 9, Sec 2:

- Structural details to be checked are listed in:
  - Ch 9, Sec 2, [1] for simplified stress analysis according to Ch 9, Sec 4, or
  - Ch 9, Sec 2, [2] for finite element stress analysis according to Ch 9, Sec 5.
- Structural details to be checked by screening fatigue assessment are listed in Ch 9, Sec 2, Table 2.

Additional specific details may be requested to be checked on a case-by-case basis by the Society.

1.1.4 Detail design standard

Detail design standard given in Ch 9, Sec 6 provides welding requirement at critical structural details in order to prevent the following types of fatigue failure:

- Fatigue cracks initiating from the weld toe into the base material.
- Fatigue cracks initiating from the weld root and propagating into the plate section under the weld.
- Fatigue cracks initiating from the weld root and propagating through the weld throat.
- Fatigue cracks initiating from surface irregularity or notch at the free edge into the base material.

1.1.5 Material

The fatigue assessment is applicable for steel material with specified minimum yield stress less than or equal to 390 N/mm^2. For steel with specified minimum yield stress value higher than 390 N/mm^2 and for steels with improved fatigue performance, the S-N curves to be used are considered by the Society on a case-by-case basis.

1.1.6 Wave loads

Fatigue assessment is based on quasi-static wave loads.

1.1.7 Loads other than wave loads

Fatigue induced by low cycle loads such as cargo variations or impact loads such as sloshing in partially filled tanks which may induce fatigue damage is disregarded in this chapter.

2 DEFINITION

2.1 Hot spots

2.1.1

Hot spots are locations in the structure where fatigue cracks may initiate due to the combined effect of nominal structural stress fluctuation and stress raising effects due to the weld geometry or similar effects due to notch in the base material.

Hot spots may be located at:

- Weld toe.
- Weld root of partial penetration or fillet weld.
- Base material at free edge of plate.

2.2 Nominal stress

2.2.1

Nominal stress is the stress in a structural component taking into account macro-geometric effect but disregarding the stress concentration due to structural discontinuities and the presence of welds. Nominal stress is to be obtained either using coarse or fine mesh FE analysis, as required in Ch 9, Sec 5 or using analytical calculation based on beam theory, as required in Ch 9, Sec 4.

2.3 Hot spot stress

2.3.1

Hot spot stress is the stress at the weld toe taking into account the stress concentration due to structural discontinuities and presence of welded attachments but disregarding the non-linear stress peak caused by the notch at the weld toe. The hot spot stresses to be considered correspond to the two principal stresses on the surface plating at the weld toe. The first principal stress acts within ±45°, perpendicular to the weld and the second principal stress acts outside ±45°.

The hot spot stress is to be obtained by multiplying the nominal stress by a Stress Concentration Factor (SCF), according to Ch 9, Sec 4, [5] or directly by a very fine mesh FE analysis, according to Ch 9, Sec 5, [3] and Ch 9, Sec 5, [4].

2.4 Local stress at free edge

2.4.1

Local stress at free edge is the stress at the plate free edge derived using finite element analysis according to Ch 9, Sec 5, [3.2].

2.5 Fatigue stress

2.5.1

Fatigue stress is the stress relevant for fatigue assessment purpose, i.e.:

- Maximum of the two principal hot spot stress for weld toe with the mean stress effect and thickness effect corrections.
- Local stress at free edge with corrections due to the base material surface finishing, mean stress effect, thickness effect and material strength.

3 ASSUMPTIONS

3.1 General

3.1.1

The following assumptions are made in the fatigue assessment:

a) A linear cumulative damage model, i.e. Palmgren-Miner's Rule, given in Ch 9, Sec 3, [5], has been used in connection with the design S-N curves, given in Ch 9, Sec 3, [4].

b) Design fatigue life, T_{DF}, is taken not less than 25 years.

c) Rule quasi-static wave induced loads are based on North Atlantic wave environment. They are determined at 10^{-2} probability level of exceedance by the Equivalent Design Wave (EDW) concept.

d) Net thickness t_{n50} approach is used, according to [5].

e) Type of stress used for crack initiating at the weld toe is the hot spot stress. Type of stress used for crack initiating at free edge of non-welded details is local stress at free edge.

f) Fatigue stress range $\Delta\sigma_{FS}$ may be calculated by simplified stress analysis or by finite element stress analysis for details with more complex geometry.

g) Long term distribution of stress range of a structural detail is assumed to follow a two-parameter Weibull distribution. Weibull shape parameter ξ is equal to 1 and the fatigue stress range $\Delta\sigma_{FS}$ is given at the reference probability level of exceedance equal to 10^{-2}.

h) The acceptance criteria for fatigue checking are the total fatigue damage D to be less than 1 for the design fatigue life, as required in Ch 9, Sec 3, [2].

4 METHODOLOGY

4.1 Principles

4.1.1 General

Appropriate fatigue strength of structural details is ensured by use of:

- Detail design standards given in Ch 9, Sec 6, providing specific design requirements.

- Fatigue strength assessment by fatigue life calculation, based on three different methods for hot spot stress calculation: simplified stress analysis, very fine mesh finite element stress analysis and fatigue screening assessment.

4.2 Simplified stress analysis

4.2.1

Procedure based on simplified stress analysis, required in Ch 9, Sec 4, is used to determine the hot spot stress at weld toe of longitudinal stiffener end connections, given in Ch 9, Sec 2, [1.1].

Nominal stresses are calculated by using analytical method based on beam theory according to Ch 9, Sec 4, [3] and Ch 9, Sec 4, [4]. Hot spot stresses are obtained by multiplying nominal stresses by stress concentration factors (SCF) of the considered detail according to Ch 9, Sec 4, [5.2].

4.3 Finite element stress analysis

4.3.1

Procedure based on finite element stress analysis, required in Ch 9, Sec 5, is used to determine hot spot stress at weld toe of specified structural details, from very fine mesh models.

The hot spot stress is generally highly dependent on the finite element model used for representing the structure.

General procedure for the calculation of hot spot stress at weld toe for any welded details except for web stiffened cruciform joints is given in Ch 9, Sec 5, [3.1]. Procedure for the calculation of hot spot stress at the flange connections for web stiffened cruciform joints is given in Ch 9, Sec 5, [4]. Calculation of local stress for non-welded area is provided in Ch 9, Sec 5, [3.2].

A list of details for which the fatigue assessment is to be made through a compulsory very fine mesh finite element analysis or through the compliance with the design standard given in Ch 9, Sec 6 if a very fine mesh finite element analysis is omitted, is given respectively in Ch 9, Sec 2, Table 1 and Ch 9, Sec 2, Table 3.

4.4 Fatigue screening assessment

4.4.1

A fatigue screening procedure is used to assess the fatigue strength of specified structural details, given in Ch 9, Sec 2, [2.1.3]. The screening procedure is based on screening hot spot stress at weld toe of specified structural details determined by multiplying the stresses obtained from a local fine mesh finite element model, required in Ch 7, Sec 3, by stress magnification factor η of the considered detail, given in Ch 9, Sec 5, Table 2.

4.5 Fatigue design standards

4.5.1

Detail design standards given in Ch 9, Sec 6 are provided to ensure improved fatigue performance of critical structural details. Alternative detail design configurations may be accepted subject to demonstration of satisfactory fatigue performance.

5 CORROSION MODEL

5.1 Net thickness

5.1.1 General

The fatigue assessment should be performed based on net thicknesses according to Ch 3, Sec 2.

5.1.2 Stress correction

The hull girder stresses for simplified stress analysis and stresses calculated by FE analysis are to be corrected by multiplying the calculated stress by f_c, correction factor taken as:

$f_c = 0.95$

6 LOADING CONDITIONS

6.1 Description

6.1.1

Fatigue analyses are to be carried out for representative loading conditions according to the intended ship's operation as given in [6.2] and [6.3].

6.2 Loading conditions for oil tankers

6.2.1

The loading conditions to be considered for oil tankers and corresponding fraction of time for each loading condition, $\alpha_{(j)}$, are defined in Table 1. The standard loading conditions for fatigue assessment of oil tankers are provided in Ch 4, Sec 8, [5.1].

Table 1 : Fraction of time in each loading condition for oil tanker

Loading conditions	$\alpha_{(j)}$
Full Load condition (Homogeneous)	0.5
Normal ballast condition	0.5

6.3 Loading conditions for bulk carriers

6.3.1

The loading conditions to be considered for bulk carriers and corresponding fraction of time for each loading condition, $\alpha_{(j)}$, are defined respectively in Table 2 and Table 3 depending on the ship's type (BC-A, BC-B, BC-C). The standard loading conditions for fatigue assessment of bulk carriers are provided in Ch 4, Sec 8, [5.2].

7 LOAD CASES

7.1 Assumptions

7.1.1

The load cases to be considered for fatigue assessment are given in Ch 4, Sec 2, [3].

The design load scenario for fatigue assessment is defined in Ch 4, Sec 7, Table 3.

For each loading condition defined in [6], all fatigue load cases are to be considered to generate the combination of dynamic loads for fatigue assessment

7.1.2 Predominant load case

The predominant load case for each loading condition (*j*) is defined as load case where the fatigue stress range for the critical location is the maximum among all fatigue load cases.

Table 2 : Loading conditions for bulk carriers

Ship type	Full load condition		Ballast condition	
	Homogeneous	Alternate	Normal ballast	Heavy ballast
BC-A	X	X	X	X
BC-B	X	-	X	X
BC-C	X	-	X	X

Table 3 : Fraction of time for each loading condition of bulk carriers

Ship length	Loading conditions	$\alpha_{(j)}$	
		BC-A	BC-B, BC-C
L < 200 m	Homogeneous	0.60	0.70
	Alternate	0.10	-
	Normal ballast (1)	0.15	0.05
	Heavy ballast (1)	0.15	0.25
$L \geq 200$ m	Homogeneous	0.25	0.50
	Alternate	0.25	-
	Normal ballast	0.20	0.20
	Heavy ballast	0.30	0.30

(1) For BC-B and BC-C without heavy ballast cargo hold, fraction of time $\alpha_{(j)}$ for normal ballast is 0.30 and for heavy ballast 0.

SECTION 2
STRUCTURAL DETAILS TO BE ASSESSED

SYMBOLS

For symbols not defined in this section, refer to Ch 1, Sec 4.

EA : Empty cargo hold in alternate loading condition.

FA : Full cargo hold in alternate loading condition.

1 SIMPLIFIED STRESS ANALYSIS

1.1 Structural details to be assessed

1.1.1

Critical structural details to be checked over the full extent of the cargo region for fatigue assessment by simplified stress analysis according to Ch 9, Sec 1 are:

- End connections of longitudinal stiffeners to transverse bulkheads, including swash bulkheads,
- End connections of longitudinal stiffeners to floors and web frames.

2 FINITE ELEMENT ANALYSIS

2.1 Structural details to be assessed

2.1.1 General

Critical structural details to be checked for fatigue by finite element analysis according to Ch 9, Sec 5 are given in [2.1.2] to [2.1.4].

Table 4 to Table 18 give the list of hot spots for structural details.

2.1.2 Details to be checked by very fine mesh analysis

Critical structural details to be assessed for fatigue by very fine mesh analysis according to Ch 9, Sec 5, [1] to Ch 9, Sec 5, [4] are provided in Table 1, irrespective of their compliance with the design standard given in Ch 9, Sec 6.

2.1.3 Details to be checked by screening fatigue assessment

The structural details listed in Table 2 for which FE fine mesh models have been analysed according to yielding requirements given in Ch 7, Sec 3 are to be assessed using the screening fatigue procedure as given in Ch 9, Sec 5, [6] or to be assessed by very fine mesh analysis according to Ch 9, Sec 5, [1] to Ch 9, Sec 5, [4].

2.1.4 Details in accordance with detail design standard

Table 3 gives critical structural details for which fatigue assessment by very fine mesh analysis can be omitted if their design is in accordance with detail design standard given in Ch 9, Sec 6.

Table 1 : Structural details to be assessed by very fine mesh analysis

No	Critical detail	Applicability	
		Oil tanker	Bulk carrier
1	Welded lower hopper knuckle connection (intersection of hopper sloping plate, inner bottom plate, longitudinal girder, floor and transverse web) at the most critical frame location. (1)	One cargo tank (4)	Ballast hold
2	Radiused lower hopper knuckle connection (intersection of knuckled inner bottom plate, longitudinal girder, floor and transverse web) at the most critical frame location. (1)	One cargo tank (4)	Ballast hold
3	Welded upper knuckle connection (intersection of hopper sloping plate, inner hull longitudinal bulkhead, transverse web and side stringer) where the angle between hopper plate and inner hull longitudinal bulkhead is less than 130 deg, at the most critical frame location. (1)	One cargo tank (4)	Ballast hold of double side bulk carrier
4	Connections of transverse bulkhead lower stools to the inner bottom plating in way of double bottom girders. (2) (3)	One cargo tank (4)	Ballast hold
5	Upper side frame bracket toe in case of flat bottom of top wing tank. (1)	N/A	FA hold (4), EA hold (4) and ballast hold of single skin bulk carrier
6	Deck plating and longitudinal hatch coaming end bracket toe.	N/A	Two aftermost holds, midship hold and two foremost holds

(1) The most critical frame position is generally, but not necessarily, located closest to the mid length of the hold. Where a swash bulkhead is fitted, this is generally located closest to the mid length between the swash bulkhead and the oil-tight bulkhead.
(2) Stool connections at each end of the hold are to be checked unless these are symmetrical about mid-hold.
(3) Position at the mid breadth location of the largest hold.
(4) Cargo hold located closest to the midship.

Table 2 : Structural details for screening fatigue assessment

No	Critical detail	Applicability	
		Oil tanker	Bulk carrier
1	Bracket toe of transverse web frame	Applicable (1)	N/A
2	Toe of horizontal stringer	Applicable (1)	N/A
3	Lower hopper knuckle connection in EA hold (2) and in FA hold (2) not assigned as a ballast hold	N/A	Applicable (1)
4	Connections of transverse bulkhead lower stool to inner bottom in EA hold (2) and in FA hold (2) where the ballast hold is not assigned to the ship	N/A	Applicable (1)

(1) For details assessed by fine mesh analysis according to Ch 7, Sec 3, [3.2].
(2) Cargo hold located closest to the midship

Table 3 : Structural details to be assessed by very fine mesh analysis if not designed in accordance with detail design standard

No	Critical detail	Corresponding detail design standard	Applicability	
			Oil tanker	Bulk carrier
1	Radiused upper hopper knuckle connection (intersection of knuckled inner side plate, side girder and transverse web) at the most critical frame location. (1)	Ch 9, Sec 6, [4]	One cargo tank (4)	Ballast hold of double side bulk carrier
2	Corrugations of bulkheads to lower stool or inner bottom plating connection. (2) (3)	Ch 9, Sec 6, [6] and Ch 9, Sec 6, [7]	One cargo tank (4)	Ballast hold
3	Corrugations of transverse bulkheads to upper stool. (2) (3)	Ch 9, Sec 6, [6]	N/A	Ballast hold
4	Cruciform heel connections between side stringers in double side and transverse bulkhead horizontal stringers, for the stringer closest to the mid depth and for the uppermost one.	Ch 9, Sec 6, [5]	One cargo tank (4)	N/A
5	Lower and upper side frame bracket toes at the most critical frame position. (1)	Ch 9, Sec 6, [8]	N/A	FA hold (4), EA hold (4) and ballast hold of single skin bulk carrier
6	Cut out for longitudinal stiffeners in web-frame without web stiffener connection.	Ch 9, Sec 6, [2.1]	One cargo tank (4)	FA hold (4), EA hold (4) and ballast hold
7	Scallops in way of block joints on strength deck close to mid hold (and down to 0.1D from deck corner).	Ch 9, Sec 6, [3]	One cargo tank (4)	FA hold (4), EA hold (4) and ballast hold

(1) The most critical frame position is generally, but not necessarily, located closest to the mid length of the hold. Where a swash bulkhead is fitted, this is generally located closest to the mid length between the swash bulkhead and the oil-tight bulkhead.

(2) Stool connections at each end of the hold are to be checked unless these are symmetrical about mid-hold.

(3) Position at the mid breath or length location of the largest hold in the considered transverse or longitudinal section.

(4) Cargo hold located closest to the midship.

Table 4 : Hot spots for welded lower hopper knuckle connection

Hot spot location	Procedure for calculation of hot spot stress
Hot spot 1: Inner bottom plate, on cargo tank side Hot spot 2: Hopper sloping plate, on cargo tank side	Ch 9, Sec 5, [4.2]
Hot spot 3: Hopper web, outboard of side girder Hot spot 4: Double bottom floor, inboard the side girder Hot spot 5: Side girder	Ch 9, Sec 5, [4.3]
Hot spot 6: Scarfing bracket to the inner bottom plate	Ch 9, Sec 5, [3.1], type '*b*'

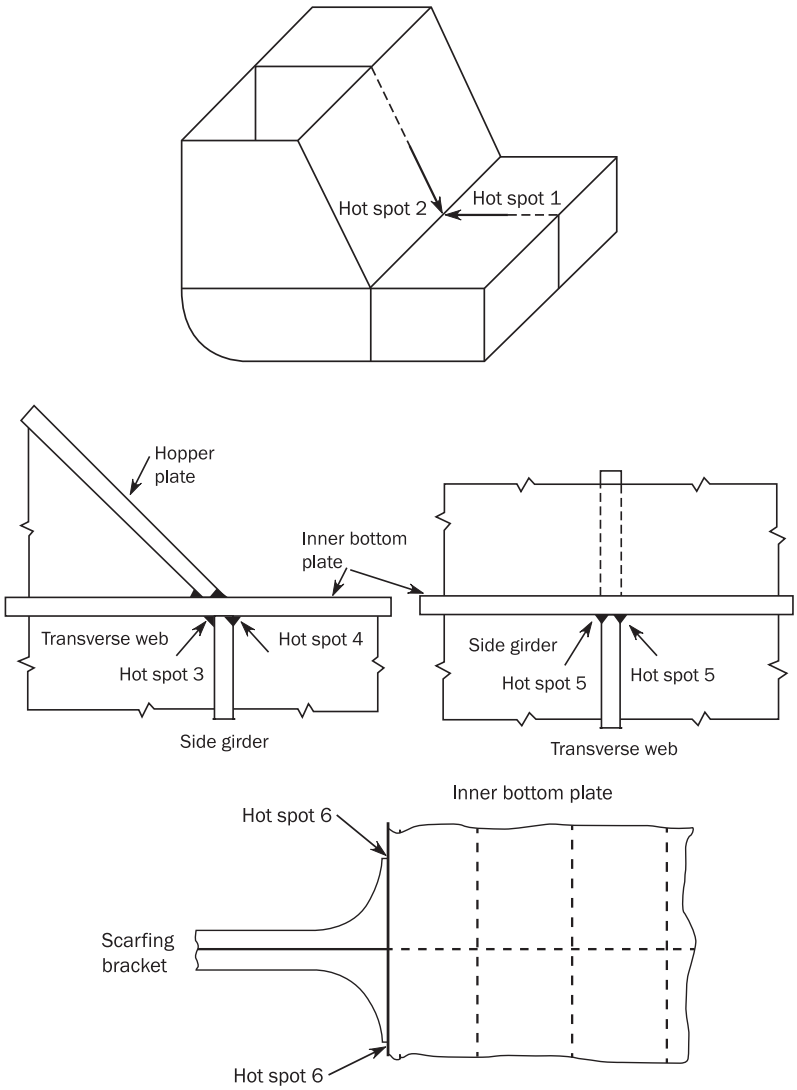

Table 5 : Hot spots for radiused lower hopper knuckle connection

Hot spot location	Procedure for calculation of hot spot stress
Hot spot 1: Inner bottom plate on ballast tank side, inboard of the side girder Hot spot 2: Radiused hopper sloping plate on ballast tank side outboard of the side girder Hot spot 3: Radiused hopper sloping plate on ballast tank side, outboard of the side girder, towards transverse web Hot spot 4: Hopper web, outboard of side girder Hot spot 5: Double bottom floor, inboard of the side girder Hot spot 6: Side girder	Ch 9, Sec 5, [3.3]

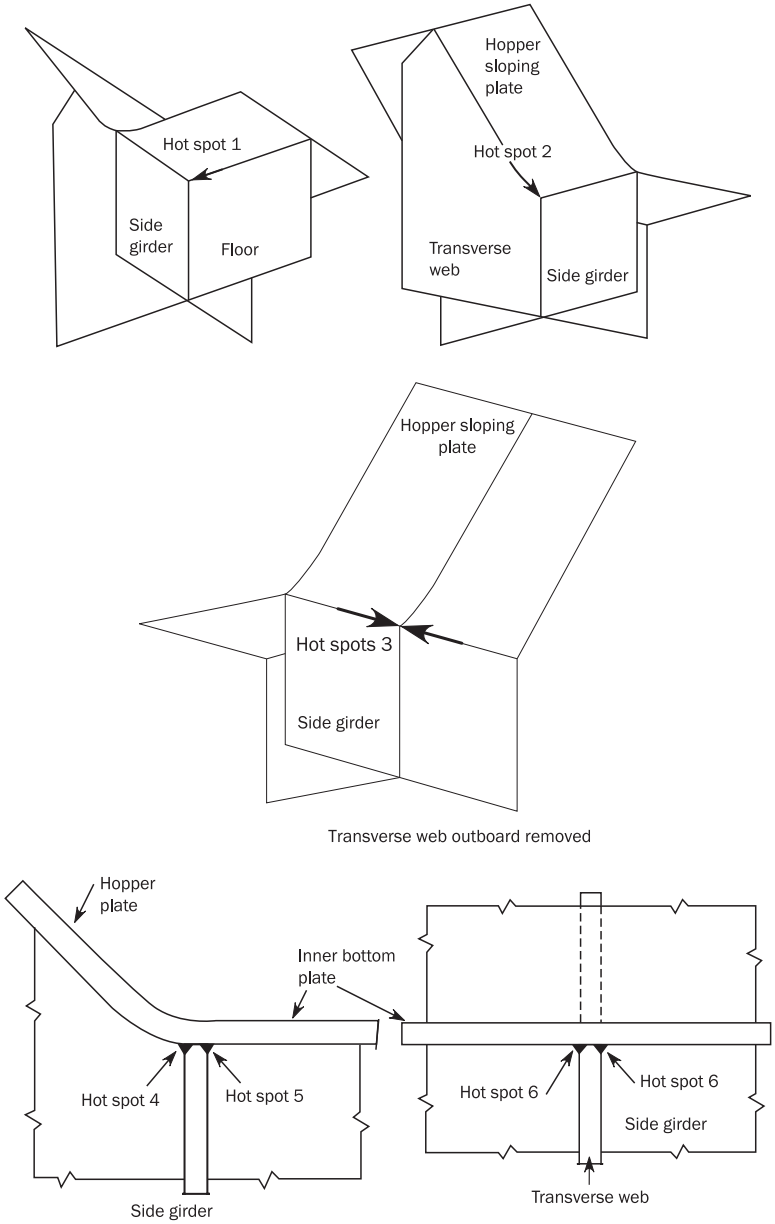

Table 6 : Hot spots for welded upper knuckle connection

Hot spot location	Procedure for calculation of hot spot stress
Hot spot 1: Side stringer on ballast tank side Hot spot 2: Hopper sloping plate, on ballast tank side	Ch 9, Sec 5, [4.2]
Hot spot 3: Transverse web, below stringer. Hot spot 4: Transverse side web, above stringer Hot spot 5: Inner hull longitudinal bulkhead on ballast tank side	Ch 9, Sec 5, [4.3]

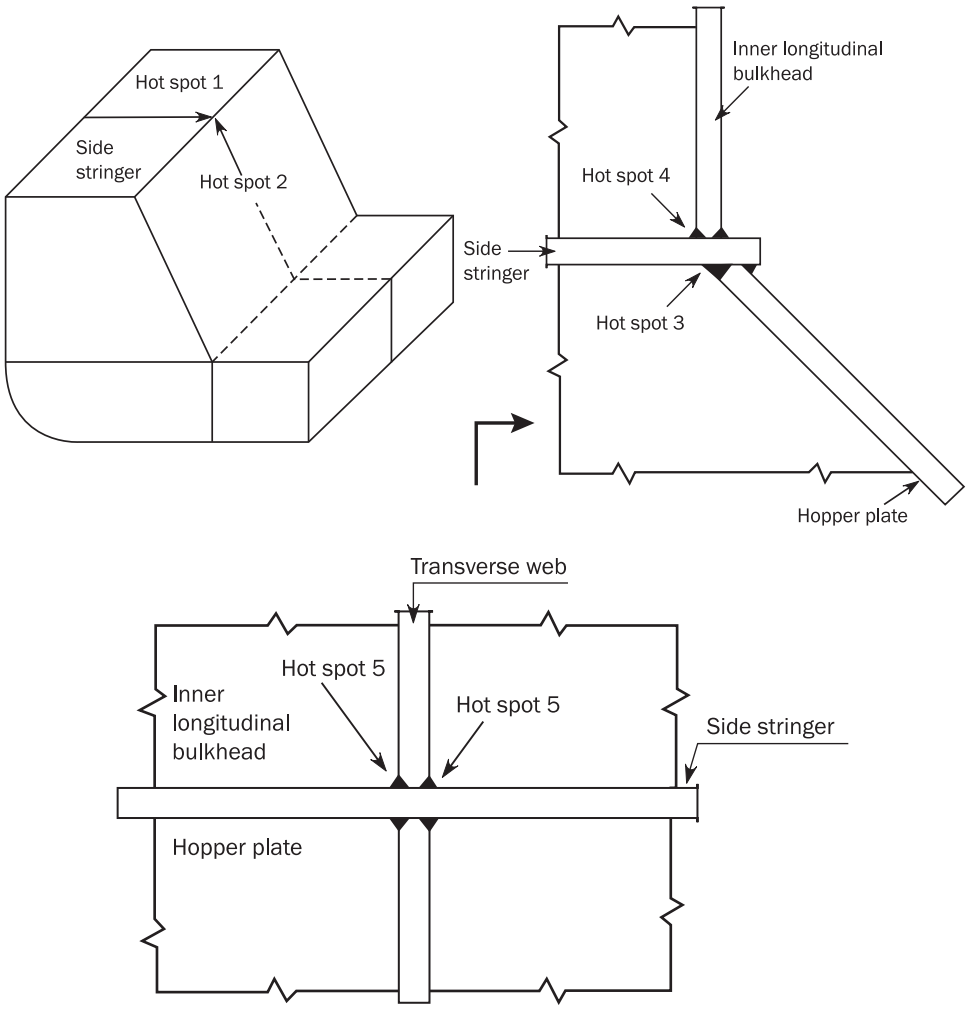

Table 7 : Hot spots for connections of transverse bulkhead lower stools to the inner bottom plating in way of double bottom girders

Hot spot location	Procedure for calculation of hot spot stress
Hot spot 1: Inner bottom plate, on cargo hold side Hot spot 2: Stool sloping plate, on cargo hold side	Ch 9, Sec 5, [4.2]
Hot spot 3: Longitudinal girder, under hold, to supporting floor in line with stool plate Hot spot 4: Longitudinal girder, under stool space to supporting floor in line with stool plate Hot spot 5: Double bottom supporting floor in line with stool plate	Ch 9, Sec 5, [4.3]

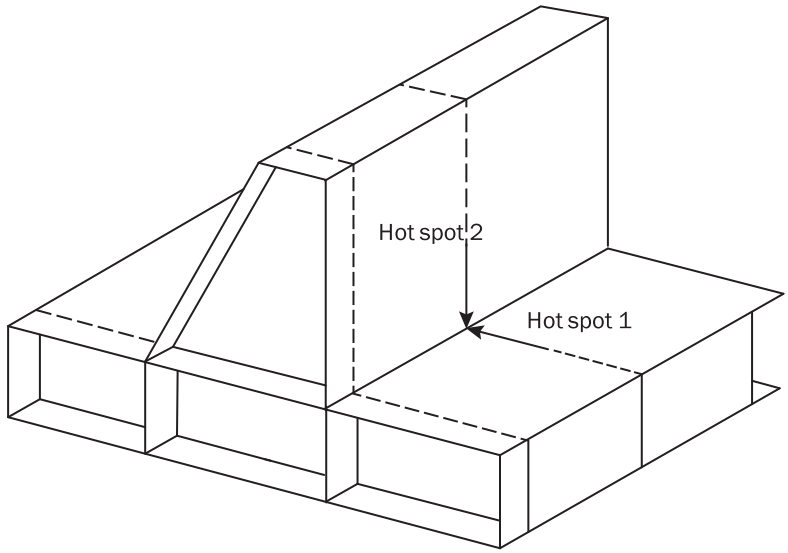

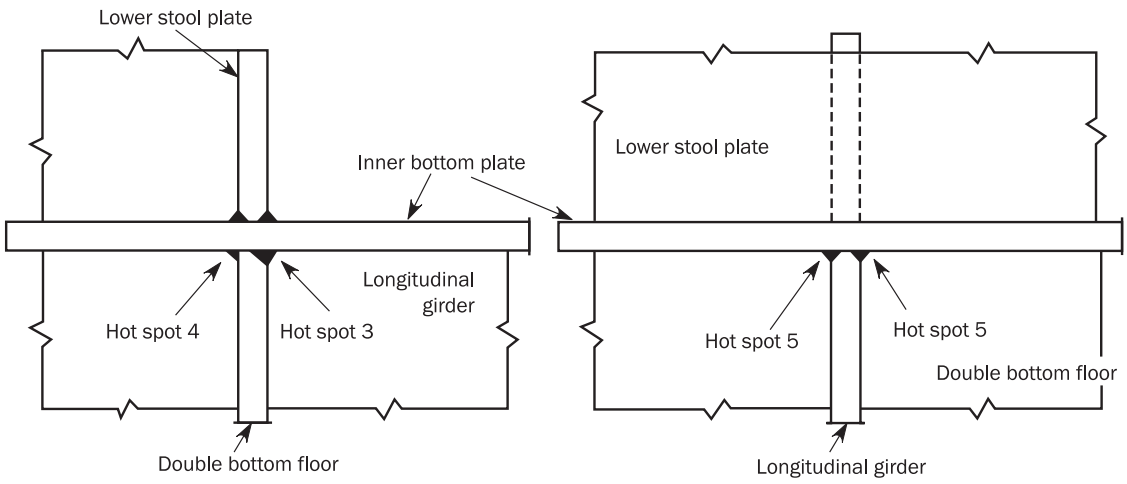

Table 8 : Hot spots for corrugated bulkhead to lower stool connection

Hot spot location	Procedure for calculation of hot spot stress
Hot spots 1 and 3: Corrugation web above shedder plate Hot spot 4: Corrugation web below shedder plate Hot spot 5, 7 and 8: Corrugation flange Hot spot 6: Gusset plate Hot spot 9: Lower stool plate to stool top plate Hot spot 10: Corrugation corner to stool top plate Hot Spot 11: Gusset plate in way of corrugation corner	Ch 9, Sec 5, [3.1], type '*a*'
Hot spot 2: Corrugation web below shedder plate	Ch 9, Sec 5, [4.3]

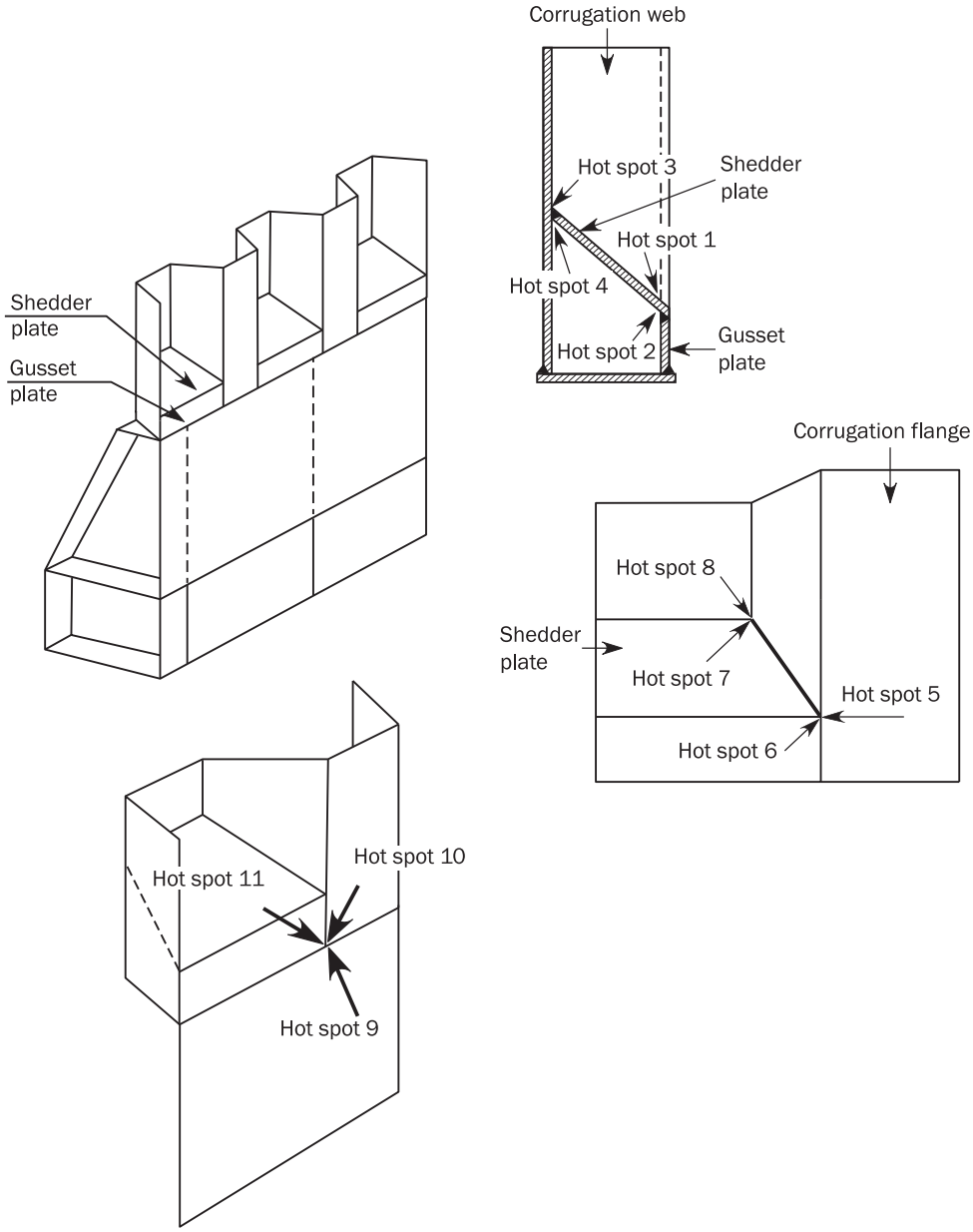

Table 9 : Hot spots for corrugated bulkhead to lower stool - Intersecting shedder plates and single sided shedder plate

Hot spot location	Procedure for calculation of hot spot stress
Intersecting shedder plates	
Hot spot 12: Intersection of shedder plates	Ch 9, Sec 5, [3.1], type '*a*'
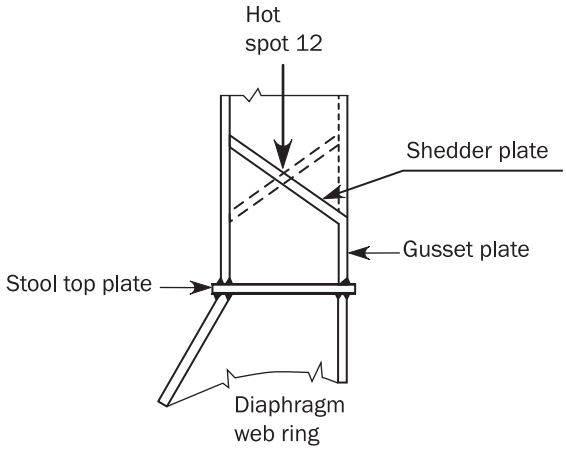	
Single sided shedder plate	
Welded connection of web and flange of corrugation to lower stool top For details of hot spots see Table 10, hot spots 1-3 If supported brackets are fitted, see Table 10 for hot spots 4	Ch 9, Sec 5, [3.1], type '*a*'
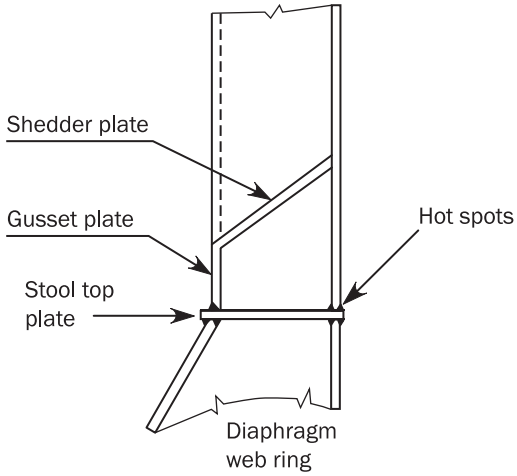	

Table 10 : Hot spots for corrugated bulkhead to lower stool or inner bottom plating connection

Hot spot location	Procedure for calculation of hot spot stress
Hot spot 1: Inner bottom/lower stool top Hot spot 2: Corner of corrugation flange in way of inner bottom/lower stool top Hot spot 3: Corner of corrugation web in way of inner bottom/lower stool top Hot spot 4: Inner bottom/lower stool top in way of brackets supporting corrugation web	Ch 9, Sec 5, [3.1], type '*a*'
Hot spot 5: Edge of supporting brackets	Ch 9, Sec 5, [3.2].

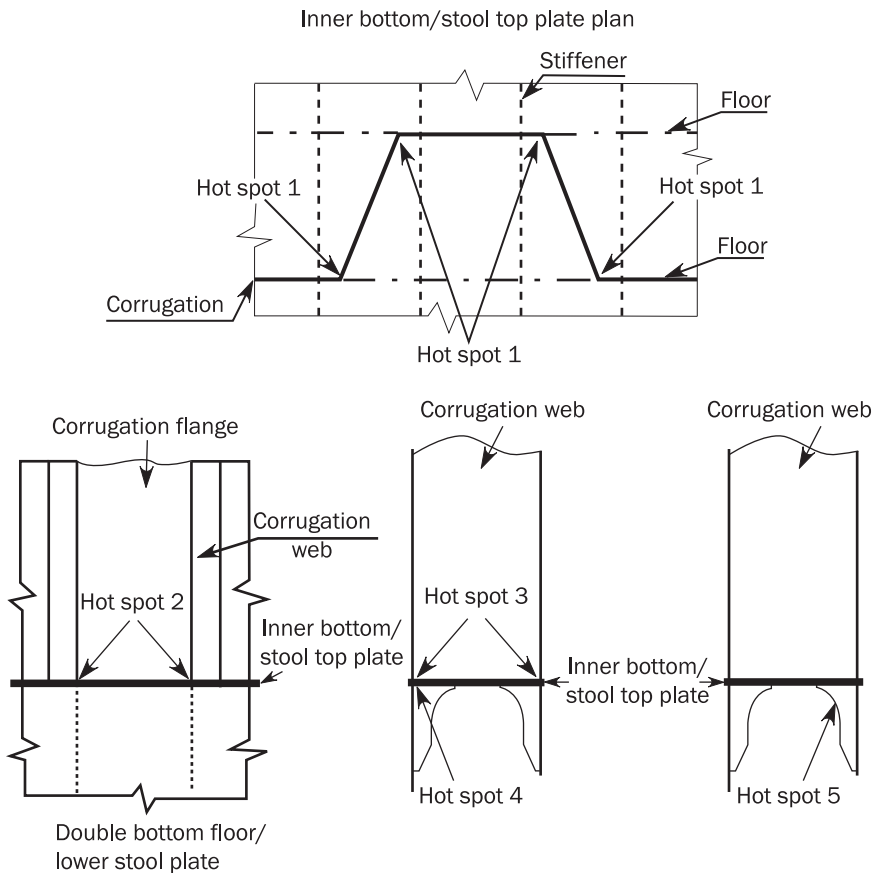

Table 11 : Hot spots for connections of corrugated longitudinal bulkhead to lower stool top

Hot spot location	Procedure for calculation of hot spot stress
See Table 9	Ch 9, Sec 5, [3.1], type '*a*'

Table 12 : Hot spots for connections of corrugated transverse bulkhead to upper stool bottom plate or to deck plate for tanker design without top stool

Hot spot location	Procedure for calculation of hot spot stress
See Table 8 and Table 9 Additional bending stresses in the deck stiffeners in way of corrugation flange induced by the bulkhead need to be considered	

Table 13 : Hot spots for connection between transverse bulkhead and inner hull longitudinal bulkhead in way of transverse bulkhead horizontal stringer and side stringer without backing bracket at stringer heel

Hot spot location	Procedure for calculation of hot spot stress
Hot spot 1: Inner hull longitudinal bulkhead plate on cargo tank side connection to plane side of transverse bulkhead (i.e. opposite side to stiffening) at heel of transverse bulkhead horizontal stringer Hot spot 2: Transverse bulkhead plate on plane side (i.e. opposite stiffening) at heel of transverse bulkhead horizontal stringer	Ch 9, Sec 5, [4.2]
Hot spot 3: Heel of transverse bulkhead horizontal stringer Hot spot 4: Side stringer in double side diagonally opposite horizontal stringer Hot spot 5: Side stringer in double side in line with horizontal stringer	Ch 9, Sec 5, [4.3]

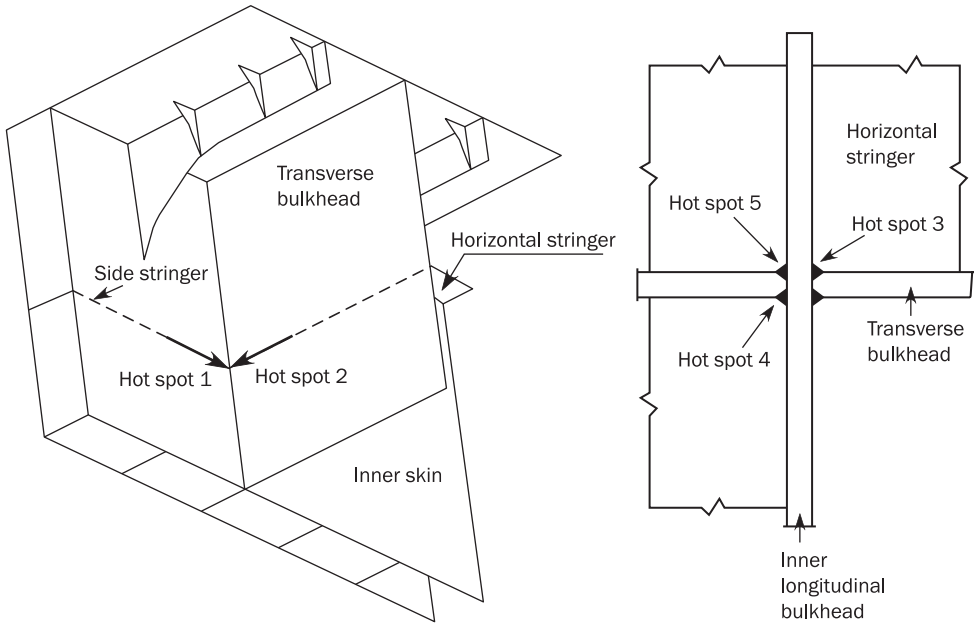

Table 14 : Hot spots for connection between transverse bulkhead and inner hull longitudinal bulkhead in way of transverse bulkhead horizontal stringer and side stringer, with backing bracket at stringer heel

Hot spot location	Procedure for calculation of hot spot stress
Hot spot 1: Bracket edge where a face plate is not fitted to the bracket Hot spot 4: Radius of bracket toe	Ch 9, Sec 5, [3.2]
Hot spot 2: Inner longitudinal bulkhead at bracket toe Hot spot 3: Transverse bulkhead at bracket toe Hot spot 6: Side stringer, in way of bracket toe Hot spot 7: Horizontal stringer in way of bracket toe	Ch 9, Sec 5, [3.1], type '*a*'
Hot spot 5: Where a face plate is fitted to the bracket, the weld connection of face plate to bracket in way of the face plate termination	Ch 9, Sec 5, [3.1], type '*b*'

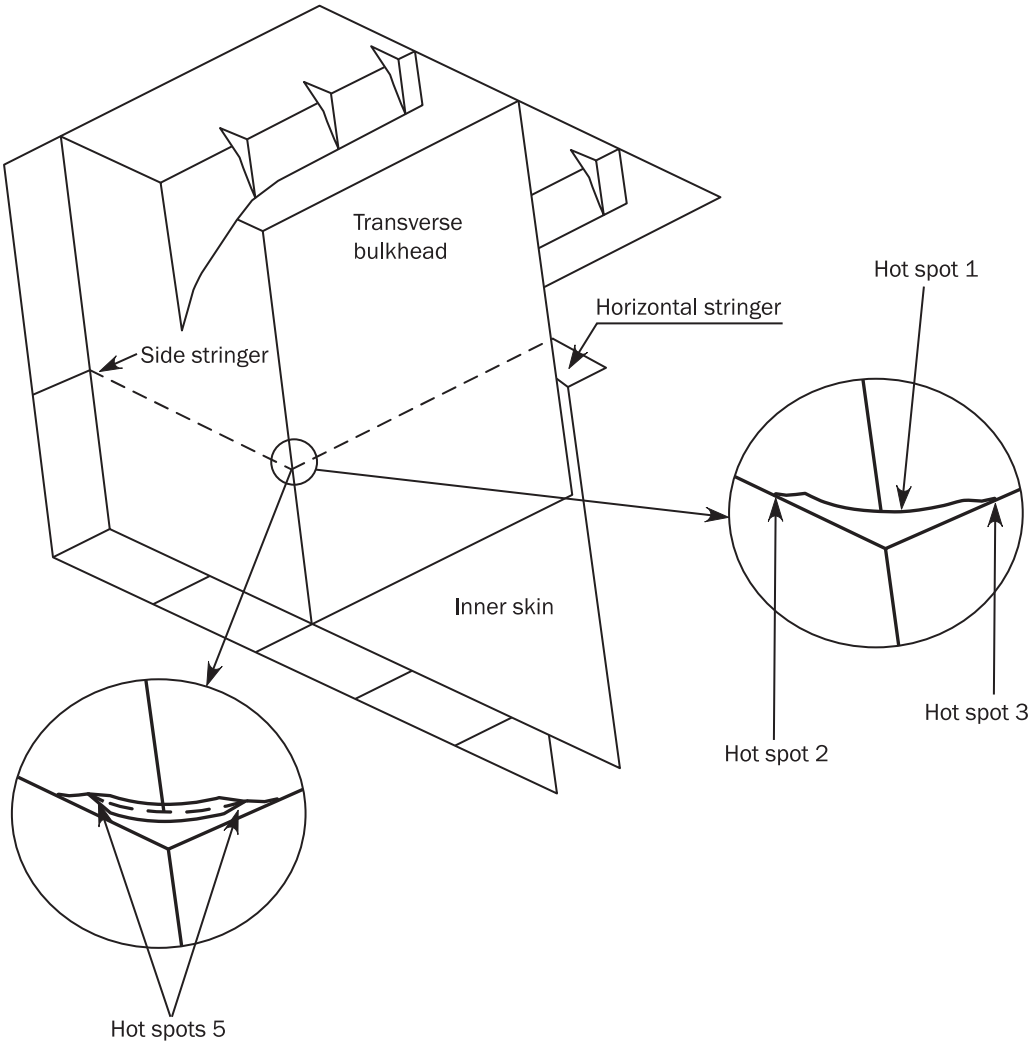

Table 15 : Hot spots for lower side frame bracket toe

Hot spot location	Procedure for calculation of hot spot stress
Hot spot 1: Hopper sloping plate in way of hold frame toe	Ch 9, Sec 5, [3.1], type '*a*'
Hot spot 2: Hold frame toe in way of face plate termination	Ch 9, Sec 5, [3.1], type '*b*'

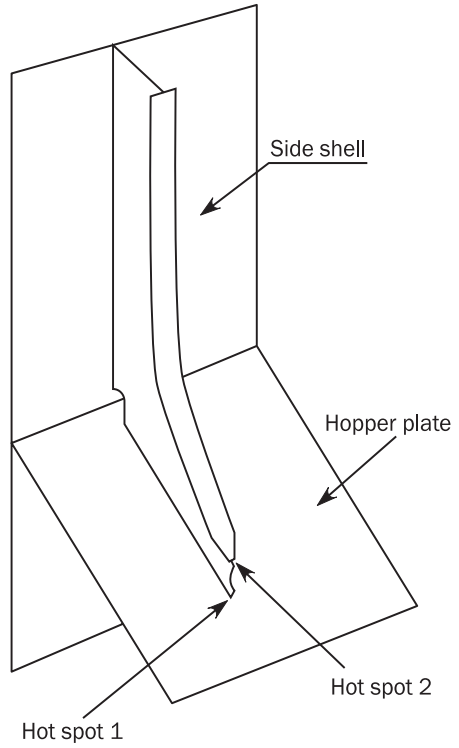

Table 16 : Hot spots for connection of longitudinal stiffener and transverse web including cut-outs and lug plates

Hot spot location	Procedure for calculation of hot spot stress
The critical hot spot has to be decided for each design in agreement with the Society. Typically the following three hot spot types are to be considered:	
Hot spot 1: Corners of the cut-out edge	Ch 9, Sec 5, [3.2]
Hot spot 2: Connection of transverse web/lug-plate to longitudinal stiffener web in way of slot Hot spot 3: Overlapping connection between transverse web and lug plate	Ch 9, Sec 5, [3.1], type '*b*'

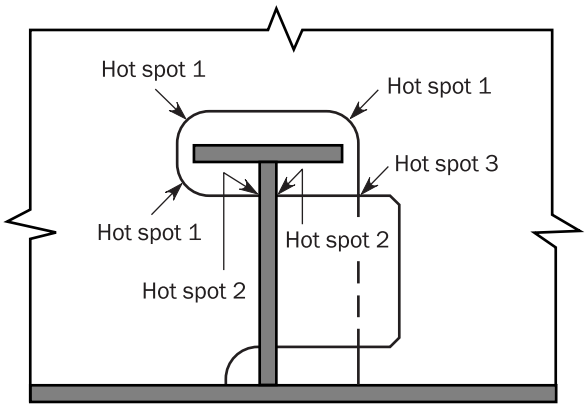

Table 17 : Hot spots for scallops in way of block connections joints at deck

Hot spot location	Procedure for calculation of hot spot stress
Hot spot 1: Butt weld in longitudinal stiffener web in way of scallop. Hot spot 2: Deck plate in way of scallop.	Ch 9, Sec 5, [3.1], type '*a*'
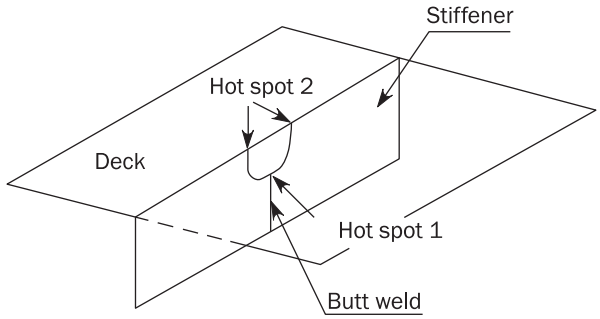	

Table 18 : Hot spots for deck plating and longitudinal hatch coaming end bracket toe

Hot spot location	Procedure for calculation of hot spot stress
Hot spot 1: Hatch corner radiused edge Hot spot 3: Radius of hatch coaming bracket toe	Ch 9, Sec 5, [3.2]
Hot spot 2: Deck plating in way of hatch coaming bracket toe	Ch 9, Sec 5, [3.1], type '*a*'
Hot spot 4: Where a face plate is fitted to the bracket, the weld connection of face plate to bracket in way of the face plate termination	Ch 9, Sec 5, [3.1], type '*b*'
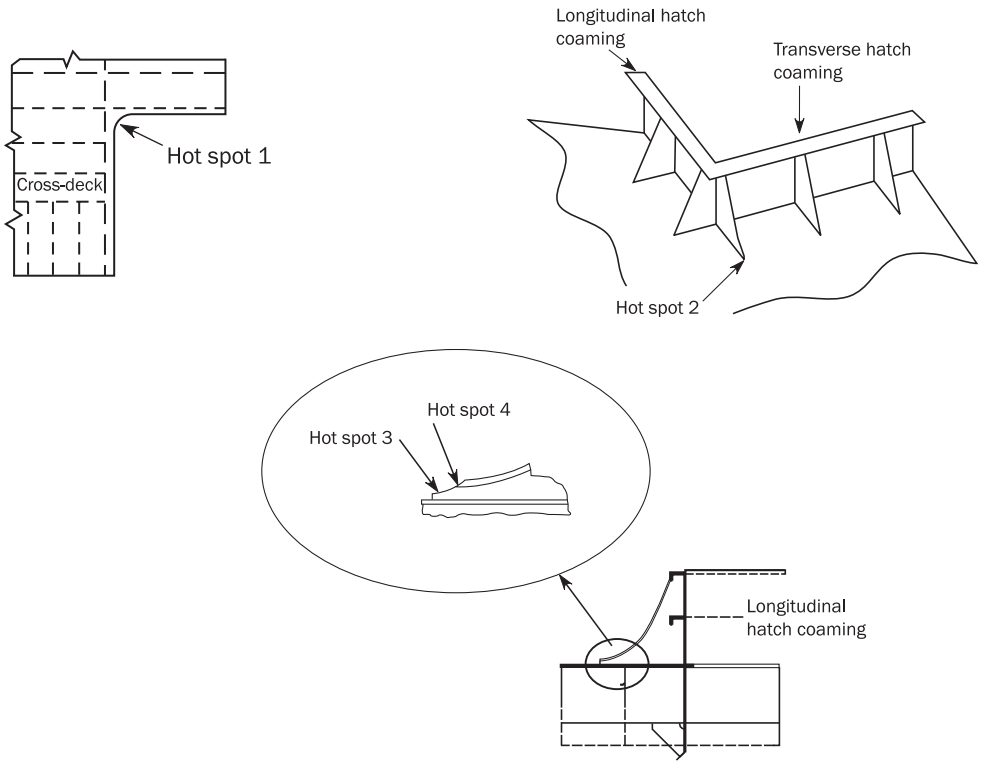	

SECTION 3
FATIGUE EVALUATION

SYMBOLS

For symbols not defined in this section, refer to Ch 1, Sec 4.

(i) : Suffix which denotes load case HSM, FSM, BSR-P, BSR-S, BSP-P, BSP-S, OST-P or OST-S specified in Ch 4, Sec 2, [3].

'*i1*' denotes load case: HSM-1, FSM-1, BSR-1P, BSR-1S, BSP-1P, BSP-1S, OST-1P or OST-1S.

'*i2*' denotes load case: HSM-2, FSM-2, BSR-2P, BSR-2S, BSP-2P, BSP-2S, OST-2P or OST-2S.

(j) : Suffix which denotes loading condition:

Full load or normal ballast for oil tankers as defined in Ch 9, Sec 1, [6.2].

Full load homogeneous, full load alternate, normal ballast or heavy ballast for bulk carriers as defined in Ch 9, Sec 1, [6.3].

T_C : Time in corrosive environment, in years, according to Table 5.

T_D : Design life, in years, to be taken as 25 years.

T_{DF} : Design fatigue life, in year, as defined in Ch 9, Sec 1.

T_F : Fatigue life, in year, calculated according to [5].

m : Inverse slope of the design S-N curve, as given in Table 2 for in-air environment and in Table 3 for corrosive environment.

The inverse slope for S-N curves in-air environment changes from m to m+2 at $N = 10^7$ cycles.

n_{LC} : Number of applicable loading conditions, as defined in Ch 9, Sec 1, [6.2] and Ch 9, Sec 1, [6.3].

f_c : Correction factor as defined in Ch 9, Sec 1, [5.1.2].

f_{thick} : Correction factor for plate thickness effect given in [3.3].

$f_{mean,\, i(j)}$: Correction factor for mean stress effect given in [3.2]

1 FATIGUE ANALYSIS METHODOLOGY

1.1 Cumulative damage

1.1.1

The fatigue assessment of the structure is based on the application of the Palmgren-Miner cumulative damage D taken as:

$$D = \sum_{i=1}^{n_{tot}} \frac{n_i}{N_i}$$

where:

n_i : Number of cycles at stress range $\Delta\sigma_i$.

N_i : Number of cycles to failure at stress range $\Delta\sigma_i$.

n_{tot} : Total number of stress range blocks.

i : Stress range block index.

1.1.2

As the long term stress range distribution of a structural detail in a ship can be described by a two-parameter Weibull distribution, as given in Ch 9, Sec 1, [3.1.1], fatigue damage can be obtained by means of a closed-form equation, as given in [5].

1.2 Fatigue strength assessment

1.2.1

Assessment of the fatigue strength of structural members according to [2] includes the following three steps:

a) Calculation of stress ranges, according to [3].

b) Selection of the design S-N curve, according to [4].

c) Calculation of the cumulative damage and the fatigue life calculation, according to [5].

2 ACCEPTANCE CRITERIA

2.1 Fatigue life and acceptance criteria

2.1.1

The calculated fatigue life, T_F, is to comply with the following formula:

$T_F \geq T_{DF}$

3 REFERENCE STRESSES FOR FATIGUE ASSESSMENT

3.1 Fatigue stress range

3.1.1

The fatigue stress range for each load case of each loading condition is defined in [3.1.2] for welded joints and in [3.1.3] for base material free edge.

The stress range of each loading condition *(j)* to be considered is the stress range obtained from the predominant load case, according to Ch 9, Sec 1, [7.1.2].

$$\Delta\sigma_{FS,\ (j)} = max_i\ (\Delta\sigma_{FS,\ i(j)})$$

where:

$\Delta\sigma_{FS,\ i(j)}$: Fatigue stress range, in N/mm², for load case *(i)* of loading condition *(j),* as defined in [3.1.2] for welded joints and in [3.1.3] for base material free edge.

3.1.2 Welded joints

For welded joints, the fatigue stress range $\Delta\sigma_{FS,i(j)}$, in N/mm², corrected for mean stress effect, thickness effect and warping effect, is taken as:

- For simplified stress analysis:

$$\Delta\sigma_{FS,\ i(j)} = f_{mean,\ i(j)} \cdot f_{thick} \cdot f_{warp} \cdot \Delta\sigma_{HS,\ i(j)}$$

- For FE analysis:
  - For web-stiffened cruciform joints:

$$\Delta\sigma_{FS,\,i(j)} = f_W \cdot f_S \cdot max(\Delta\sigma_{FS1,\,i(j)}, \Delta\sigma_{FS2,\,i(j)})$$

  - For other joints:

$$\Delta\sigma_{FS,\,i(j)} = max(SideL, SideR)[max(\Delta\sigma_{FS1,\,i(j)}, \Delta\sigma_{FS2,\,i(j)})]$$

where:

f_W : Correction factor for the effect of stress gradient along weld line given as 0.96

f_S : Correction factor for the effect of supporting member given as 0.95

$\Delta\sigma_{HS,i(j)}$: Hot spot stress range, in N/mm^2, due to dynamic loads in load case (*i*) of loading condition *(j)* given in Ch 9, Sec 4, [2.1.1].

$\Delta\sigma_{FS1,\,i(j)}$: Fatigue stress range, in N/mm^2,due to the principal hot spot stress range $\Delta\sigma_{HS1,\,i(j)}$

$$\Delta\sigma_{FS1,\,i(j)} = f_{mean1,\ i(j)} \cdot f_{thick} \cdot f_c \cdot \Delta\sigma_{HS1,\ i(j)}$$

$\Delta\sigma_{FS2,\,i(j)}$: Fatigue stress range, in N/mm^2,due to the principal hot spot stress range $\Delta\sigma_{HS2,\,i(j)}$

$$\Delta\sigma_{FS2,\,i(j)} = 0.9 \cdot f_{mean2,\ i(j)} \cdot f_{thick} \cdot f_c \cdot \Delta\sigma_{HS2,\ i(j)}$$

SideL, *SideR*: Left and right side respectively of the line A-A as shown in Ch 9, Sec 5, Figure 15 and Ch 9, Sec 5, Figure 16.

$f_{mean1,\,i(j)}$: Correction factor for mean stress effect given in [3.2].

$f_{mean2,\,i(j)}$: Correction factor for mean stress effect given in [3.2].

f_{warp} : Correction factor due to warping effect, taken as:

- f_{warp} = 1.07 for the deck longitudinal stiffener of bulk carrier, the closest to the longitudinal hatch coaming in way of the hatch corner as shown in Figure 1, except f_{warp} = 1.0 when OST is not the dominant load case for all loading conditions,
- f_{warp} = 1.04 for following deck longitudinal stiffeners of bulk carrier, except f_{warp} = 1.0 when OST is not the dominant load case for all loading conditions:
  - The closest stiffener to the longitudinal hatch coaming at one web frame away from the hatch corner, in way of the hatch opening as shown in Figure 1,
  - The second closest stiffener away from the longitudinal hatch coaming in way of the hatch corner as shown in Figure 1,
- f_{warp} = 1.0 for the other cases.

Figure 1 : Warping effect on deck longitudinal stiffeners of bulk carrier

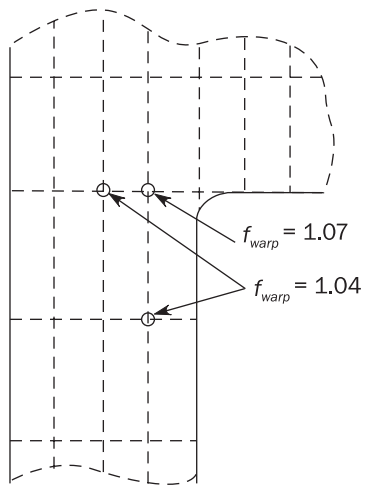

$\Delta\sigma_{HS1,\,i(j)}$: Principal hot spot stress ranges, in N/mm², due to dynamic loads for load case (*i*) of loading condition *(j)* which acts within ±45° of the perpendicular to the weld toe, determined in Ch 9, Sec 5, [3.1.2], Ch 9, Sec 5, [3.3.2] and Ch 9, Sec 5, [4.2.3] for the two types of shell elements (4-node or 8-node).

$\Delta\sigma_{HS2,\,i(j)}$: Principal hot spot stress ranges, in N/mm², due to dynamic loads for load case (*i*) of loading condition *(j)* which acts outside ±45° of the perpendicular to the weld toe, determined in Ch 9, Sec 5, [3.1.2], Ch 9, Sec 5, [3.3.2] and Ch 9, Sec 5, [4.2.3] for the two types of shell elements (4-node or 8-node).

3.1.3 Base material free edge

For base material free edge, the fatigue stress range, $\Delta\sigma_{FS,i(j)}$ in N/mm², is taken as the local stress range at free edge, $\Delta\sigma_{BS,i(j)}$, as defined in Ch 9, Sec 1, [2.4] with correction factors:

$$\Delta\sigma_{FS,\ i(j)} = K_{sf} \cdot f_{material} \cdot f_{mean,\ i(j)} \cdot f_{thick} \cdot f_c \cdot \Delta\sigma_{BS,\ i(j)}$$

where:

K_{sf} : Surface finishing factor for base material given in [4.2.3].

$f_{material}$: Correction factor for material strength, taken as:

$$f_{material} = \frac{1200}{965 + R_{eH}}$$

$\Delta\sigma_{BS,\ i(j)}$: Local stress range, in N/mm², due to dynamic loads in load case (*i*) of loading condition *(j)* taken as:

$$\Delta\sigma_{BS,\ i(j)} = \left|\sigma_{BS,\ i1(j)} - \sigma_{BS,\ i2(j)}\right|$$

$\sigma_{BS,\ i1(j)}$, $\sigma_{BS,\ i2(j)}$: Local stress, in N/mm², in load case '*i1*' and '*i2*' of loading condition *(j),* obtained by very fine mesh FE analysis specified in Ch 9, Sec 5.

3.2 Mean stress effect

3.2.1 Correction factor for mean stress effect

The mean stress correction factor to be considered for each principal hot spot stress range of welded joint, $\Delta\sigma_{HS,\ i(j)}$, or for local stress range at free edge, $\Delta\sigma_{BS,\ i(j)}$, is taken as:

a) For welded joint:

$$f_{mean,\ i(j)} = \begin{cases} min\left[1.0,\ 0.9 + 0.2\,\dfrac{\sigma_{mCor,\,i(j)}}{2\Delta\sigma_{HS,\ i(j)}}\right] & \text{for } \sigma_{mCor,\,i(j)} \geq 0 \\ max\left[0.3,\ 0.9 + 0.8\,\dfrac{\sigma_{mCor,\,i(j)}}{2\Delta\sigma_{HS,\ i(j)}}\right] & \text{for } \sigma_{mCor,\,i(j)} < 0 \end{cases}$$

b) For base material:

$$f_{mean,\ i(j)} = \begin{cases} min\left[1.0,\ 0.8 + 0.4\,\dfrac{\sigma_{mCor,\,i(j)}}{2\Delta\sigma_{BS,\ i(j)}}\right] & \text{for } \sigma_{mCor,\,i(j)} \geq 0 \\ max\left[0.3,\ 0.8 + \dfrac{\sigma_{mCor,\,i(j)}}{2\Delta\sigma_{BS,\ i(j)}}\right] & \text{for } \sigma_{mCor,\,i(j)} < 0 \end{cases}$$

where:

$$\sigma_{mCor,\,i(j)} = \begin{cases} \sigma_{mean,\,i(j)} & \text{for } \sigma_{max} \leq R_{eEq} \\ R_{eEq} - \sigma_{max} + \sigma_{mean,\,i(j)} & \text{for } \sigma_{max} > R_{eEq} \end{cases}$$

$$\sigma_{max} = \begin{cases} max_{i,(j)}(\Delta\sigma_{HS,i(j)} + \sigma_{mean,i(j)}) & \text{for welded joint} \\ max_{i,(j)}(\Delta\sigma_{BS,i(j)} + \sigma_{mean,i(j)}) & \text{for base material} \end{cases}$$

$$R_{eEq} = max(315; R_{eH})$$

$\sigma_{mean,\,i(j)}$: Fatigue mean stress, in N/mm², for base material calculated according to [3.2.2] or welded joint calculated according to [3.2.3] or [3.2.4] as applicable.

3.2.2 Mean stress for base material free edge

The fatigue mean stress for base material free edge, $\sigma_{mean,i(j)}$, in N/mm², due to static and dynamic loads case '*i1*' and '*i2*' of loading condition (*j*) is calculated by the following formula based on local stress:

$$\sigma_{mean,\ i(j)} = \frac{\sigma_{BS,\ i1(j)} + \sigma_{BS,\ i2(j)}}{2}$$

3.2.3 Mean stress for simplified method

The fatigue mean stress to be considered for welded joint assessed by the simplified stress analysis is to be obtained from Ch 9, Sec 4, [2.2].

3.2.4 Mean stress for FE analysis

The fatigue mean stresses for welded joint due to static and dynamic loads, $\sigma_{mean,\ i(j),pX}$ and $\sigma_{mean,\ i(j),pY}$, in N/mm², for load cases '*i1*' and '*i2*' of loading condition (j) ,belonging to the two principal hot spot stress range directions, *pX* and *pY*, is calculated by the following formula based on hot spot stress components as defined in Ch 9, Sec 5, [3.1.2], Ch 9, Sec 5, [3.3.2] and Ch 9, Sec 5, [4.2.3]:

$$\sigma_{mean,\ i(j)pX} = \frac{(\sigma_{HS,\ i1(j)})_{xx} + (\sigma_{HS,\ i2(j)})_{xx} + (\sigma_{HS,\ i1(j)})_{yy} + (\sigma_{HS,\ i2(j)})_{yy}}{4} +$$
$$\left(\frac{(\sigma_{HS,\ i1(j)})_{xx} + (\sigma_{HS,\ i2(j)})_{xx} - (\sigma_{HS,\ i1(j)})_{yy} - (\sigma_{HS,\ i2(j)})_{yy}}{4}\right) \cdot \cos 2\theta + \left(\frac{(\sigma_{HS,\ i1(j)})_{xy} + (\sigma_{HS,\ i2(j)})_{xy}}{2}\right) \cdot \sin 2\theta$$

$$\sigma_{mean,\ i(j)pY} = \frac{(\sigma_{HS,\ i1(j)})_{xx} + (\sigma_{HS,\ i2(j)})_{xx} + (\sigma_{HS,\ i1(j)})_{yy} + (\sigma_{HS,\ i2(j)})_{yy}}{4} -$$
$$\frac{(\sigma_{HS,\ i1(j)})_{xx} + (\sigma_{HS,\ i2(j)})_{xx} - (\sigma_{HS,\ i1(j)})_{yy} - (\sigma_{HS,\ i2(j)})_{yy}}{4} \cdot \cos 2\theta - \left(\frac{(\sigma_{HS,\ i1(j)})_{xy} + (\sigma_{HS,\ i2(j)})_{xy}}{2}\right) \cdot \sin 2\theta$$

θ : Angle between the direction x of the element coordinate system and the principal direction *pX* of the principal hot spot stress range coordinate system (Ch 9, Sec 5, [3.1.2], Ch 9, Sec 5, [4.2.3]). The direction x of the element coordinate system is defined as the normal to the weld toe.

The one of the two mean stresses $\sigma_{mean,\ i(j),pX}$ and $\sigma_{mean,\ i(j),pY}$ which has a principal stress direction with an absolute value less than 45° is defined as $\sigma_{mean1,\ i(j),}$ belonging to $\Delta\sigma_{HS1,\ i(j)}$. The other mean stress is defined as $\sigma_{mean2,\ i(j)}$ belonging to $\Delta\sigma_{HS2,\ i(j)}$.

3.3 Thickness effect

3.3.1

Plate thickness primarily influences the fatigue strength of welded joints through the effect of geometry, and through-thickness stress distribution. The correction factor, f_{thick}, for plate thickness effect is taken as:

- For $t_{n50} \leq 22$ mm, $f_{thick} = 1.0$.
- For $t_{n50} > 22$ mm, $f_{thick} = (t_{n50}/22)^n$

where:

t_{n50} : Net thickness of the considered member in way of the hot spot for welded joints or base material free edge, in mm.

- For simplified stress analysis, the net thickness to be considered for stiffeners is as follows:
  - Flat bar and Bulb profile: no correction,
  - Angle bar and T-bar: flange net thickness.
- For FE analysis, the net thickness to be considered is the net thickness of the member where the crack is likely to initiate and propagate.

  For 90° attachments, i.e. cruciform welded joints, transverse T-joints and plates with transverse attachment, the net thickness to be considered is to be taken as:

$$t_{n50} = min\left(\frac{d}{2}, t_{1n50}\right)$$

n : Thickness exponent provided in Table 1 and Table 4 respectively for welded and non-welded joints. n is to be selected according to the considered stress direction. For this selection, $\Delta\sigma_{HS1}$ and $\Delta\sigma_{HS2}$ are considered perpendicular and parallel to the weld respectively.

d : Toe distance, in mm, as shown in Figure 2, taken as:

$$d = t_{2n50} + 2\ell_{leg}$$

t_{1n50} : Net thickness, in mm, of the continuous plate as shown in Figure 2.

t_{2n50} : Net thickness, in mm, of the transverse attach plate where the hot spot is assessed, as shown in Figure 2.

ℓ_{leg} : Fillet weld leg length, in mm.

When post-weld treatment methods are applied to improve the fatigue life of considered welded joint, the thickness exponent is provided in [6].

Figure 2 : Toe distance for cruciform welded joints, transverse T-joints and plates with transverse attachment

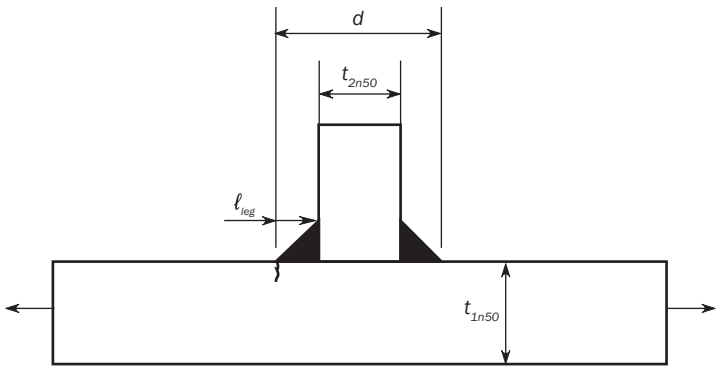

4 S-N CURVES

4.1 Basic S-N curves

4.1.1 Capacity

The capacity of welded steel joints and steel base material with respect to fatigue strength is defined by S-N curves which provide the relationship between the stress range applied to the detail and the number of constant amplitude load cycles to failure.

Table 1 : Welded joints: thickness exponents

No	Joint category description	Geometry	Condition	*n*
1	Cruciform joints, transverse T-joints, plates with transverse attachments	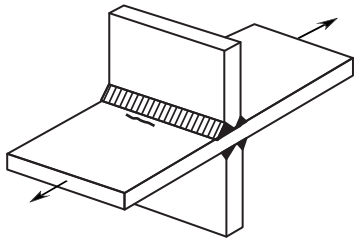	As-welded	0.25
		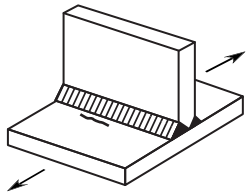	Weld toe treated by post-weld improvement method	0.2
2	Transverse butt welds		As-welded	0.2
			Ground flush or weld toe treated by post-weld improvement method	0.1
3	Longitudinal welds or attachments to plate edges	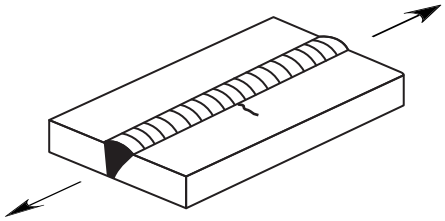	Any	0.1
		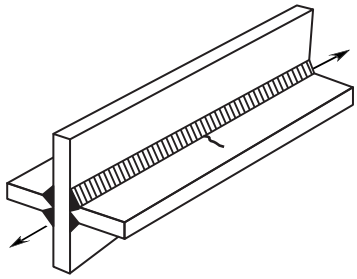	Weld toe treated by post-weld improvement method	0.1
		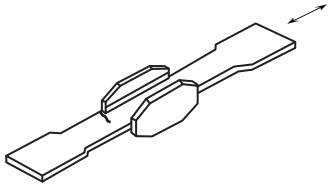		
(1)	No benefit applicable for post-weld treatment of longitudinal end connections.			

No	Joint category description	Geometry	Condition	*n*
4	Longitudinal attachments on the flat bar or bulb profile	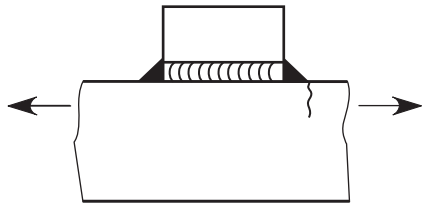	Any	0
			Weld toe treated by post-weld improvement method (1)	0
5	Longitudinal attachments and doubling plates	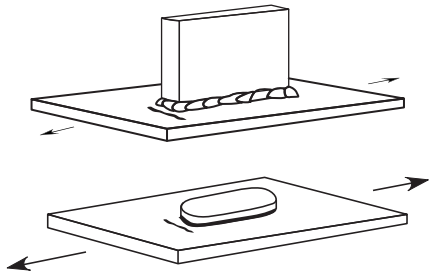	As-welded	0.2
			Weld toe treated by post-weld improvement method	0.1
6	Longitudinal attachments and doubling plates supported longitudinally	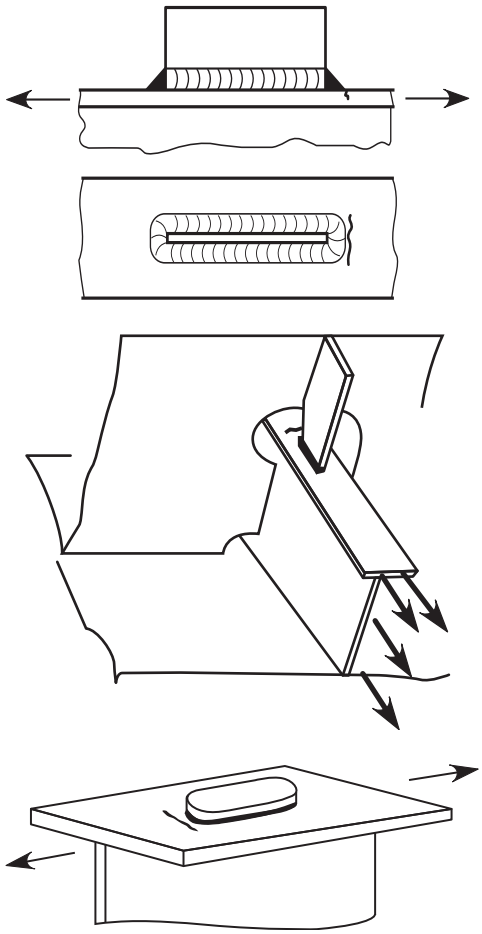	As-welded	0.1
			Weld toe treated by post-weld improvement method (1)	0

(1) No benefit applicable for post-weld treatment of longitudinal end connections.

4.1.2 Design S-N curves

The fatigue assessment is based on use of S-N curves which are obtained from fatigue tests. The design S-N curves are established at two standard deviations below the mean S-N curves corresponding to 50% of probability of survival for relevant experimental data. Design S-N curves given in Table 2 and Table 3 correspond to a probability of survival of 97.7%.

4.1.3 S-N curve scope of application

The S-N curves are applicable to normal and high strength steels up to a specified minimum yield stress equal to 390 N/mm^2.

4.1.4 In-air environment

The basic design curves in-air environment shown in Figure 3 are represented by linear relationships between log ($\Delta\sigma$) and log (N) as follows:

$$\log(N) = \log(K_2) - m \cdot \log(\Delta\sigma)$$

where:

$$\log(K_2) = \log(K_1) - 2 \cdot \log(\delta)$$

K_1 : Constant related to mean S-N curve, as given in Table 2.

K_2 : Constant related to design S-N curve, as given in Table 2.

δ : Standard deviation of log (N), as given in Table 2.

$\Delta\sigma_q$: Stress range at $N = 10^7$ cycles related to design S-N curve, in N/mm^2, as given in Table 2.

Table 2 : Basic S-N curve data, in-air environment

Class	K_1		m	Standard deviation δ	K_2	Design stress range at 10^7 cycles	Design stress range at 2×10^6 cycles
	K_1	$\log_{10}K_1$		$\log_{10}\delta$	K_2	$\Delta\sigma_q$ N/mm^2	N/mm^2
B	2.343E15	15.3697	4.0	0.1821	1.01E15	100.2	149.9
C	1.082E14	14.0342	3.5	0.2041	4.23E13	78.2	123.9
D	3.988E12	12.6007	3.0	0.2095	1.52E12	53.4	91.3

Figure 3 : Basic design S-N curves, in-air environment

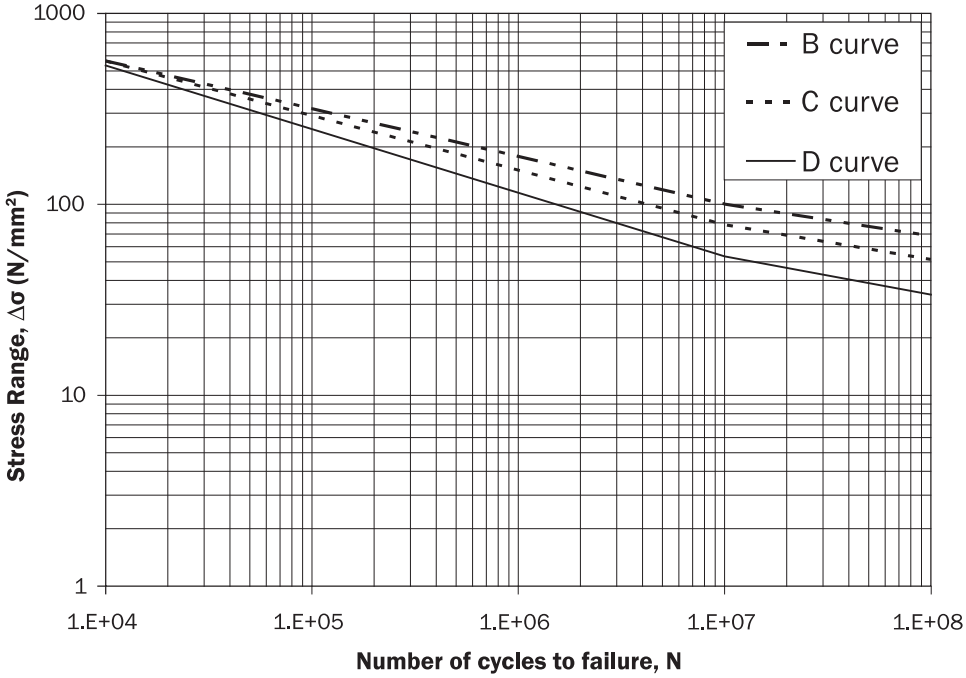

4.1.5 Corrosive environment

The basic design curves for corrosive environment shown in Figure 4 are represented by linear relationships between log($\Delta\sigma$) and log(N) as follows:

$$\log(N) = \log(K_2) - m \cdot \log(\Delta\sigma)$$

N : Predicted number of cycles to failure under stress range $\Delta\sigma$.

K_2 : Constant related to design S-N curve as given in Table 3.

Table 3 : Basic S-N curve data, corrosive environment

Class	K_2	m	Design stress range at 2×10^6 cycles, N/mm²
B_{corr}	5.05×10^{14}	4.0	126.1
C_{corr}	2.12×10^{13}	3.5	101.6
D_{corr}	7.60×10^{11}	3.0	72.4

Figure 4 : Basic design S-N curves, corrosive environment

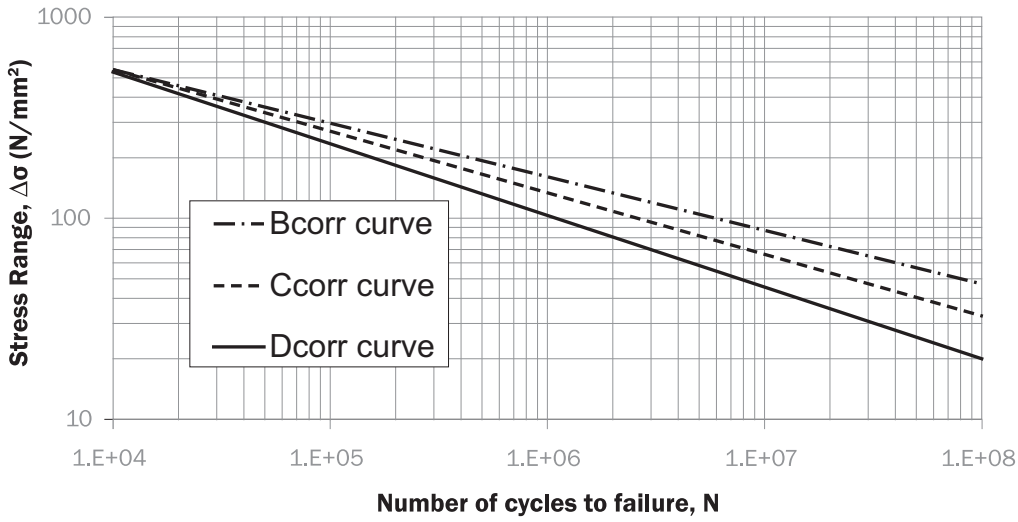

4.2 Selection of S-N curves

4.2.1 Welded joints

For fatigue assessment of welded joints exposed to in-air environment, S-N curve D as defined in Table 2 is to be used. For corrosive environment, S-N curve D_{corr} as defined in Table 3 is to be used.

4.2.2 Base material free edge

For fatigue assessment of base material at free edge exposed to in-air environment, S-N curves B or C as defined in Table 2 are to be used. For corrosive environment, S-N curves B_{corr} or C_{corr} as defined in Table 3 are to be used.

4.2.3 Surface finishing factor

The S-N curve C is applicable to most of non-welded locations taking into account the likelihood of some notching from corrosion, wear and tear in service with surface finishing factor as given in Table 4.

Higher surface finishing quality may be applied in using S-N curve B as given in Table 4, provided adequate protective measures are taken against wear, tear and corrosion and finite element analysis according to Ch 9, Sec 5, [2] is carried out.

Table 4 : Non-welded joints: thickness exponent and surface finishing factor

	Joint configuration, fatigue crack location and stress direction	Edge cutting process	Edge treatment	Surface finishing	n	K_{sf}	S-N curve
1	Rolled or extruded plates and sections as well as seamless pipes, no surface or rolling defects 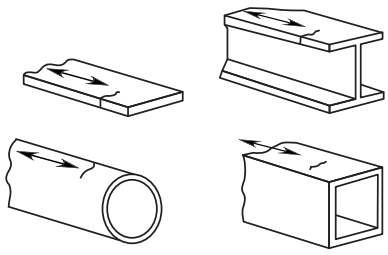	N/A	N/A	No surface nor roll defect (1) (2)	0	0.94	B
2	Cut edges 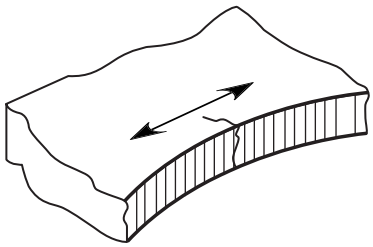	Machine-cutting e.g. by a thermal process or sheared edge cutting	Cutting edges chamfered or rounded by means of smooth grinding, groove direction parallel to the loading direction	Smooth surface free of cracks and notches (1) (2)	0.1	1.00	B
			Cutting edges broken or rounded	Smooth surface free of cracks and notches (1) (2)	0.1	1.07	B
			No edge treatment	Surface free of cracks and severe notches (inspection procedure) (1) (2)	0.1	1.0	C
		Manually thermally cut e.g. by flame cutting	No edge treatment	Surface free of cracks and severe notches (inspection procedure) (1) (2)	0.1	1.24	C

(1) Stress increase due to geometry of cut-outs to be considered.
(2) Fine mesh FE analysis according to Ch 9, Sec 5, [2].

5 FATIGUE DAMAGE CALCULATION

5.1 General

5.1.1

The design fatigue life is divided into a number of time periods due to different loading conditions and due to limitation of the corrosion protection.

It is assumed that the corrosion protection (i.e. coating system) is only effective for a limited number of years during which the structural details are protected, i.e. in-air environment. During the remaining part of the design life as specified in Table 5, the structural details are unprotected i.e. exposed to corrosive environment.

5.1.2

The elementary fatigue damage, given in [5.2], is the damage accumulated during a specific loading condition *(j)* associated with a specific environmental condition either protected condition, i.e. in-air environment, or unprotected condition, i.e. corrosive environment.

The combined fatigue damage, given in [5.3], is the combination of damage accumulated for a specific loading condition *(j)* for the in-air and corrosive environment time.

Total fatigue damage, given in [5.4], is the sum of the combined fatigue damages obtained for all loading conditions.

5.2 Elementary fatigue damage

5.2.1

The elementary fatigue damage for each fatigue loading condition *(j)* is to be calculated independently for both protected in-air environment and unprotected corrosive environment, based on the fatigue stress range obtained for the predominant load case as follows:

$$D_{E(j)} = \frac{\alpha_{(j)} \cdot N_D}{K_2} \frac{\Delta\sigma_{FS,\ (j)}^m}{(\ln N_R)^{m/\xi}} \cdot \mu_{(j)} \cdot \Gamma\left(1 + \frac{m}{\xi}\right)$$

where:

N_D : Total number of wave cycles experienced by ship during the design fatigue life, taken as:
$N_D = 31.557 \times 10^6 (f_0 T_D) / (4 \log L)$

f_0 : Factor taking into account time in seagoing operations excluding time in loading and unloading, repairs, etc.

$f_0 = 0.85$.

$\alpha_{(j)}$: Fraction of time in each loading condition given in Ch 9, Sec 1, Table 1 for oil tanker and in Ch 9, Sec 1, Table 3 for bulk carrier.

$\Delta\sigma_{FS,\ (j)}$: Fatigue stress range at the reference probability level of exceedance of 10^{-2}, in N/mm^2.

N_R : Number of cycles corresponding to the reference probability of exceedance of 10^{-2}.

$N_R = 100$.

ξ : Weibull shape parameter,

$\xi = 1$.

$\Gamma(x)$: Complete Gamma function.

K_2 : Constant of the design S-N curve, as given in Table 2 for in-air environment and in Table 3 for corrosive environment.

$\mu_{(j)}$: Coefficient taking into account the change of inverse slope of the S-N curve, m,

- For in-air environment:

$$\mu_{(j)} = 1 - \frac{\left\{\gamma\left(1 + \frac{m}{\xi}, \nu_{(j)}\right) - \nu_{(j)}^{-\Delta m/\xi} \cdot \gamma\left(1 + \left(\frac{m + \Delta m}{\xi}\right), \nu_{(j)}\right)\right\}}{\Gamma\left(1 + \frac{m}{\xi}\right)}$$

$$\nu_{(j)} = \left(\frac{\Delta\sigma_q}{\Delta\sigma_{FS,\ (j)}}\right)^{\xi} \ln N_R$$

- For corrosive environment:

$\mu_{(j)} = 1.0$

$\gamma(a,x)$: Incomplete Gamma function.

$\Delta\sigma_q$: Stress range, in N/mm^2, corresponding to the intersection of the two segments of design S-N curve at $N = 10^7$ cycles, as given in Table 2.

Δm : Change in inverse slope of S-N curve at N=10^7 cycles.
$\Delta m = 2$

5.3 Combined fatigue damage

5.3.1

The combined fatigue damage in protected in-air environment and unprotected corrosive environment for each loading condition *(j)* is to be calculated as follows:

$$D_{(j)} = D_{E,\ air(j)} \cdot \frac{T_D - T_C}{T_D} + D_{E,\ corr(j)} \cdot \frac{T_C}{T_D}$$

where:

$D_{E,air(j)}$: The elementary fatigue damage for in-air environment for loading condition *(j)* given in [5.2.1].

$D_{E,corr(j)}$: The elementary fatigue damage for corrosive environment for loading condition *(j)* as calculated in [5.2.1].

Table 5 : Time in corrosive environment, T_C

Location of weld joint or structural detail	Time in corrosive environment T_C, in years
Water ballast tank	10
Oil cargo tank	
Lower part (1) of bulk cargo hold and water ballast cargo hold	
Bulk cargo hold and water ballast cargo hold except lower part (1)	5
Void space Other areas	
(1) Lower part means cargo hold part below a horizontal level located at a distance of 300 mm below the frame end bracket for holds of single side skin construction or 300 mm below the hopper tank upper end for holds of double side skin construction (see Pt 2, Ch 1, Sec 2, Figure 1).	

5.4 Total fatigue damage

5.4.1

The total fatigue damage for all applicable loading conditions is calculated as follows:

$$D = \sum_{j=1}^{n_{LC}} D_{(j)}$$

where:

$D_{(j)}$: Combined fatigue damage for each applicable loading condition, as given in [5.3].

5.5 Fatigue life calculation

5.5.1

The fatigue life, T_F, is taken as:

$$T_F = \frac{T_D}{D_{air}} \qquad \text{if } \frac{T_D}{D_{air}} \le (T_D - T_C)$$

$$T_F = T_D - T_C + \left(\frac{T_D}{D_{air}} - T_D + T_C\right)\frac{D_{air}}{D_{corr}} \quad \text{otherwise.}$$

where:

D_{air} : Total fatigue damage for all loading conditions in-air environment taken as:

$$D_{air} = \sum_{j=1}^{n_{LC}} D_{E,\ air(j)}$$

D_{corr} : Total fatigue damage for all loading conditions in corrosive environment taken as:

$$D_{corr} = \sum_{j=1}^{n_{LC}} D_{E,\ corr(j)}$$

6 WELD IMPROVEMENT METHODS

6.1 General

6.1.1

Post-weld fatigue strength improvement methods are to be considered as a supplementary means of achieving the required fatigue life, and subjected to quality control procedures and corrosion protection in accordance with Ch 3, Sec 4.

[RCN1 to 01 JAN 2020]

6.1.2 Limitation of the benefit of post-weld treatment

For structural details where the benefit of post-weld treatment is applicable, the calculated fatigue life at the design stage for the considered structural detail excluding the post-weld treatment effects, is not to be less than T_{DF} / 1.47.

However, for structural details inside a bulk cargo hold the calculated fatigue life at design stage excluding post-weld treatment effects is not to be less than 25 years.

Note 1: When T_{DF} is taken equal to 25 years, the calculated fatigue life at the design stage for the considered structural detail excluding the post-weld treatment effects, is not to be less than 17 years.

6.1.3 Post-weld treatment at fabrication stage

There is one basic post-weld treatment method considered in these Rules to improve fatigue strength at the fabrication stage, i.e. weld geometry control and defect removal method by burr grinding.

6.1.4 Weld toe

The improvement method is applied to the weld toe. Thus, it is intended to increase the fatigue life of the weld from the viewpoint of a potential fatigue failure arising at the weld toe. The possibility of failure initiation at other locations is always to be considered. If the failure is shifted from the weld toe to the root by applying post-weld treatment, there may be no significant improvement in the overall fatigue performance of the joint. Improvements of the weld root cannot be expected from treatment applied to weld toe.

A brief description of the method and the degree of improvement which can be achieved is given in [6.2].

6.1.5 Weld type for post-weld treatment

When weld improvements are planned, full or partial penetration welds with a minimum root face according to Ch 12, Sec 3, [2.4] are to be used to mitigate or to eliminate the possibility of cracking at the weld root.

6.2 Weld toe burr grinding

6.2.1

The weld may be machined using a burr grinding tool to produce a favourable shape to reduce stress concentrations and remove defects at the weld toe, see Figure 5. In order to eliminate defects, such as intrusions, undercuts and cold laps, the material in way of the weld toe is to be removed. The depth of grinding shall be at least 0.5 mm below the bottom of any visible undercut. The total depth of the burr grinding is not to be greater than the lesser of 2 mm and of 7% the local gross thickness of the machined plate. Any undercut not complying with this requirement is to be repaired by an approved method.

6.2.2

To avoid introducing a detrimental notch effect due to small radius grooves, the burr diameter is to be scaled to the plate thickness at the weld toe being ground. The diameter is to be in the 10 to 25 mm range for application to welded joints with plate thickness from 10 to 50 mm. The resulting root radius of the groove is to be no less than 0.25 t_{as_built}. The weld throat thickness and leg length after burr grinding must comply with the rule requirements or any increased weld sizes as indicated on the approved drawings.

The inspection procedure is to include a check of the weld toe radius, the depth of burr grinding, and confirmation that the weld toe undercut has been removed completely.

Figure 5 : Details of ground weld toe geometry

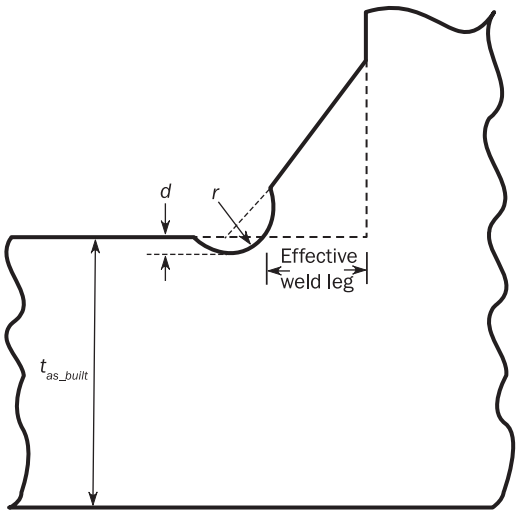

6.3 Fatigue improvement factor

6.3.1

The benefit of burr grinding corresponds to an increase in fatigue strength by a factor of 1.3 (i.e. a reduction of the effective stress range by 1.3), reducing the damage in air to D_{air}/ 2.2,

where:

D_{air} : Fatigue damage in air as given in Ch 9, Sec 3, [5.3.1].

6.4 Applicability

6.4.1

The application of post-weld improvement and fatigue improvement factor provided in this section is subject to following limitations:

- The weld type complies with [6.1.5].
- The weld improvement is effective in improving the fatigue strength of structural details under high cycle fatigue conditions therefore the fatigue improvements factors do not apply to low-cycle fatigue conditions, i.e. when $N \leq 5\times10^4$, where N is the number of life cycles to failure.
- Unless otherwise specifically stated, the fatigue improvement factor is to be used for welds, joining steel plates which are between 6 and 50 mm thick.
- Fatigue improvement factor is to be applied to as-welded transverse butt welds, as-welded T-joint and cruciform welds and as-welded longitudinal attachment welds excluding longitudinal end connections.
- In way of areas prone to mechanical damage, fatigue improvement may only be granted if these are adequately protected.
- Treatment of inter-bead toes is required for large multi-pass welds as shown in Figure 6.
- The builder is to provide the list of details and their locations on the ship for which the post-weld treatment has been applied.

[RCN1 to 01 JAN 2020]

Figure 6 : Extent of weld toe burr grinding to remove inter-bead toes on weld face

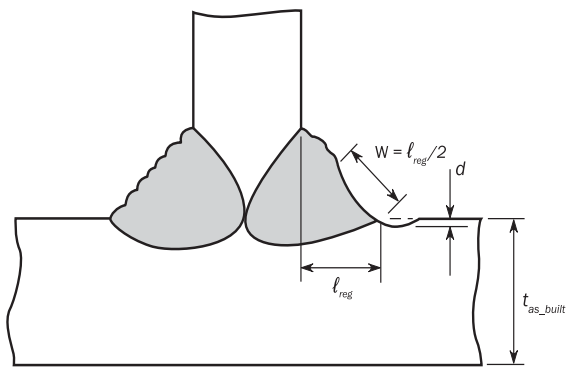

ℓ_{leg} : Weld leg length.

w : Width of groove.

d : Depth of grinding.

7 WORKMANSHIP

7.1 Application

7.1.1

In general, the fatigue performance of structural details can be improved by adopting enhanced workmanship standards, which include building alignment and weld control.

7.2 Workmanship control for construction details

7.2.1 Building alignment and tolerance control

Building alignment exceeding construction tolerance could introduce additional stress concentration for structural details, reducing the fatigue performance. The builder is responsible to comply with the construction requirements given in Ch 12, Sec 1.

7.2.2 Weld profile control

Poor weld geometry could introduce additional stress concentration; therefore special attention should be given to achieving a favourable geometry and smooth transition at the weld toe. Weld profile control, i.e. enhanced workmanship may be required by the Society in way of critical weld toe locations.

The weld notch stress concentration is a direct function of the weld flank angle and the weld toe radius.

The validity of the aforementioned S-N curves is based on a weld flank angle with a maximum mean value of 50 deg and on a weld toe radius with a minimum mean value of 0.5 mm. Welding details may be requested to be submitted for approval for some critical areas considering the calculated fatigue life.

7.2.3 Post-weld treatment methods

Post-weld treatment methods may be used to improve fatigue resistance of structural detail, as specified in [6].

At the design stage, the calculated fatigue life should not generally take into account any benefit that may be derived from such treatment. This benefit should only be considered in exceptional cases when the design fatigue life can not reasonably be achieved by adopting alternative design measures such as improvement of the shape of the cut-outs, soft brackets toes, local increase in thickness or other changes in geometry of the structural detail. This is to be considered on a case-by-case basis by the Society.

7.2.4 Detail design standard

Requirements for improved design of structural details are provided in Ch 9, Sec 6. The detail design standard also includes workmanship and welding requirements.

SECTION 4
SIMPLIFIED STRESS ANALYSIS

SYMBOLS

For symbols not defined in this section, refer to Ch 1, Sec 4.

(i) : Suffix which denotes dynamic load case HSM, FSM, BSR-P, BSR-S, BSP-P, BSP-S, OST-P or OST-S specified in Ch 4, Sec 2, [3.1].

'i1' denotes dynamic load case HSM-1, FSM-1, BSR-1P, BSR-1S, BSP-1P, BSP-1S, OST-1P or OST-1S

'i2' denotes dynamic load case HSM-2, FSM-2, BSR-2P, BSR-2S, BSP-2P, BSP-2S, OST-2P or OST-2S.

(j) : Suffix which denotes loading condition:

'Full load' or 'Normal ballast' for oil tankers, as defined in Ch 9, Sec 1, [6.2].

'Full load homogeneous', 'Full load alternate', 'Normal ballast' or 'Heavy ballast' for bulk carriers, as defined in Ch 9, Sec 1, [6.3].

ℓ_{bdg} : Effective bending span of stiffener, in m, as defined in Ch 3, Sec 7.

$I_{y\text{-}n50}$: Net vertical hull girder moment of inertia, at the longitudinal position being considered, in m^4.

$I_{z\text{-}n50}$: Net horizontal hull girder moment of inertia, at the longitudinal position being considered, in m^4.

y : Transverse coordinate of the load calculation point under consideration, in m.

z : Vertical coordinate of the load calculation point under consideration, in m.

z_n : Distance from the baseline to the horizontal neutral axis, in m.

f_c : Correction factor as defined in Ch 9, Sec 1, [5.1.2].

f_{NA} : Correction factor taken as:

- For bulk carrier:
  - f_{NA} = 1.0 for $0 < z \leq D/2$
  - f_{NA} = 0.95 for $z = D$
  - f_{NA} : linear interpolation for other values of z
- For oil tanker: f_{NA} = 1.0

K_a : Geometrical stress concentration factor for stress due to axial load given in [5.2].

K_b : Geometrical stress concentration factor for stress due to lateral pressure given in [5.2].

K_n : Stress concentration factor due to unsymmetrical stiffener geometry, as defined in [5.1].

1 GENERAL

1.1 Application

1.1.1

This section defines the procedure for a simplified stress assessment which is to be used to evaluate the fatigue strength of the longitudinal stiffener end connections.

1.1.2

The hot spot stress ranges and hot spot mean stresses in way of each end connection of longitudinal stiffener, as shown in Figure 2 are to be evaluated at the flange of the longitudinal stiffener in the following locations:

a) Transverse webs or floors other than those located
   - At transverse bulkhead including swash bulkhead of cargo hold or
   - In way of stool,

   such that additional hot spot stress due to the relative displacement is not to be considered.

b) Transverse webs or floors located
   - At transverse bulkhead including swash bulkhead of cargo hold or
   - In way of stool,

   such that additional hot spot stress due to the relative displacement are to be considered.

Stress concentration factors due to unsymmetrical stiffener geometry according [5.1] and due to the stiffener end connection geometry at point 'A' and 'B' according to [5.2] are to be applied.

1.2 Assumptions

1.2.1

The following assumptions are made in the fatigue assessment for longitudinal stiffener end connections:

a) The hot spot stress is based on:
   - Nominal stresses.
   - Stress concentration factors given in [5].
   - Loading conditions specified in Ch 9, Sec 1, [6].

b) The longitudinal stiffener end connection types are described in [5.2].

1.2.2

The end connections given in [5.2] are based on typical joint geometry under axial and lateral loadings. When a structural detail is different from those shown in Table 4, a finite element analysis is to be used to demonstrate the adequacy of the detail in terms of fatigue strength, according to [5.3].

2 HOT SPOT STRESS

2.1 Hot spot stress range

2.1.1

The hot spot stress range, in N/mm², due to dynamic loads for load case (*i*) of loading condition (*j*) is obtained from the following formula:

$$\Delta\sigma_{HS,\ i(j)} = \left|(\sigma_{GD,\ i1(j)} + \sigma_{LD,\ i1(j)} + \sigma_{dD,\ i1(j)}) - (\sigma_{GD,\ i2(j)} + \sigma_{LD,\ i2(j)} + \sigma_{dD,\ i2(j)})\right|$$

where:

$\sigma_{GD,i1(j)}$, $\sigma_{GD,i2(j)}$: Stresses due to global hull girder wave bending moments, in N/mm², as defined in [3.1.1].

$\sigma_{LD,i1(j)}$, $\sigma_{LD,i2(j)}$: Stresses due to local dynamic pressure, in N/mm², as defined in [4.1.1].

$\sigma_{dD,i1(j)}$, $\sigma_{dD,i2(j)}$: Stresses due to relative displacement in wave, in N/mm², as defined in [4.2.4] and [4.2.5].

2.2 Hot spot mean stress

2.2.1

The hot spot mean stress, in N/mm², due to static and dynamic loads for load case (*i*) of loading condition (*j*) is obtained from the following formula:

$$\sigma_{mean,\ i(j)} = \sigma_{GS,\ (j)} + \sigma_{LS,\ (j)} + \sigma_{dS,\ (j)} + \sigma_{mLD,\ i(j)} + \sigma_{mGD,\ i(j)}$$

where for the load case (*i*) of loading condition (*j*):

$\sigma_{GS,\ (j)}$: Stress due to still water hull girder bending moment, in N/mm², as defined in [3.2.1].

$\sigma_{LS,\ (j)}$: Stress due to local static pressure, in N/mm², as defined in [4.1.2].

$\sigma_{dS,\ (j)}$: Stress due to relative displacement in still water, in N/mm², as defined in [4.2.7].

$\sigma_{mLD,\ i(j)}$: Mean stress due to local dynamic pressure, in N/mm², as defined as:

$$\sigma_{mLD,\ i(j)} = \frac{\sigma_{LD,\ i1(j)} + \sigma_{LD,\ i2(j)}}{2}$$

$\sigma_{LD,i1(j)}$, $\sigma_{LD,i2(j)}$: Stress due to local dynamic pressure, in N/mm², as defined in [4.1.1].

$\sigma_{mGD,\ i(j)}$: Mean stress due to global wave bending moment, in N/mm², as defined as:

$$\sigma_{mGD,\ i(j)} = \frac{\sigma_{GD,\ i1(j)} + \sigma_{GD,\ i2(j)}}{2}$$

$\sigma_{GD,i1(j)}$, $\sigma_{GD,i2(j)}$: Stress due to global wave bending moment, in N/mm², as defined in [3.1.1].

3 HULL GIRDER STRESS

3.1 Stress due to hull girder wave bending moments

3.1.1

The hull girder hot spot stress, in N/mm², for load cases *i1* and *i2* of loading condition (*j*) is obtained from the following formula:

$$\sigma_{GD,\ ik(j)} = f_c \cdot K_a \left(\frac{M_{wv-LC,\ ik}}{I_{y-n50}} (z - z_n) \cdot f_{NA} - \frac{M_{wh-LC,\ ik}}{I_{z-n50}} y \right) 10^{-3}$$

where:

$M_{wv-LC,\ ik}$: Vertical wave bending moment, in kNm, of the considered dynamic load case, as defined in Ch 4, Sec 4, at the hull girder load calculation point of the considered longitudinal position for the loading condition (*j*) for *ik* being equal to *i1* and *i2*.

$M_{wh-LC,\ ik}$: Horizontal wave bending moment, in kNm, of the considered dynamic load case, as defined in Ch 4, Sec 4, at the hull girder load calculation point of the considered longitudinal position for the loading condition (*j*) for *ik* being equal to *i1* and *i2*.

3.2 Stress due to still water hull girder bending moment

3.2.1

The hull girder hot spot stress due to still water bending moment, in N/mm², in loading condition (*j*) is obtained from the following formula:

$$\sigma_{GS,\ (j)} = \frac{f_c \cdot f_{NA} \cdot K_a \cdot \beta_{(j)} \cdot M_{sw} \cdot (z - z_n)}{I_{y-n50}} 10^{-3}$$

where:

M_{sw} : Permissible still water vertical bending moment, in kNm, as defined in Ch 4, Sec 4 at the hull girder load calculation point of the considered longitudinal position.

$\beta_{(j)}$: Fraction of permissible still water vertical bending moment, as defined in Table 1.

Table 1 : Fraction of permissible still water vertical bending moments, $\beta_{(j)}$

Ship type	Loading conditions	Longitudinal position on the considered section	$\beta_{(j)}$
Oil tankers	Homogeneous	N/A	0.60 in sagging condition
	Normal ballast		0.80 in hogging condition
Bulk carriers	Homogeneous		0.40 in sagging condition
	Alternate		0.75 in hogging condition
	Normal ballast		0.80 in hogging condition
	Heavy ballast (See Figure 1)	Ballast hold	0.75 in sagging condition
		Cargo holds adjacent to ballast hold	Linear interpolation between 0.75 in sagging condition and 0.45 in hogging condition
		Other cargo holds	0.45 in hogging condition

Figure 1 : Distribution of still water bending moment for fatigue assessment in way of ballast hold

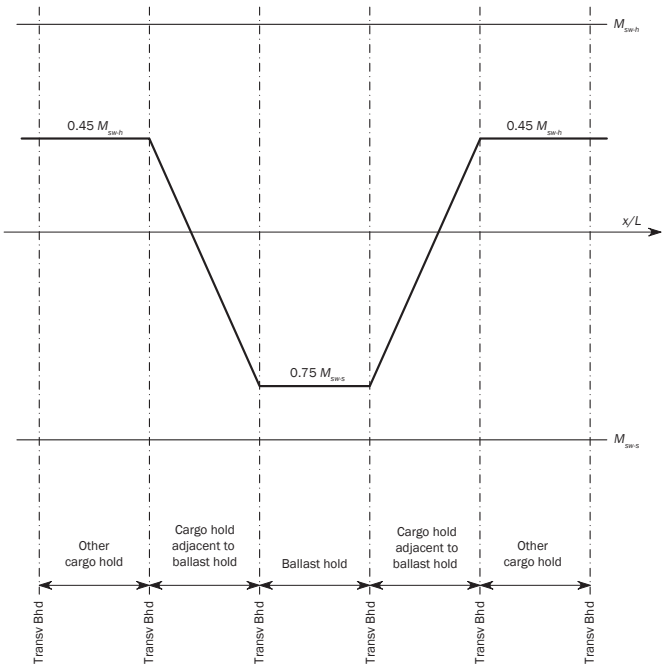

4 LOCAL STIFFENER STRESS

4.1 Stress due to stiffener bending

4.1.1 Stress due to dynamic pressure

The hot spot stress, in N/mm², due to local dynamic pressure in load case *i1* and *i2* for loading condition (*j*) is obtained from the following formula:

$$\sigma_{LD,\ ik(j)} = \frac{K_b\ K_n\ s\ \ell_{bdg}^2\ (\eta_W\ f_{NL}\ P_{W,\ ik(j)} + \eta_{ld}\ P_{ld,\ ik(j)} + \eta_{bd}\ P_{bd,\ ik(j)})\left(1 - \frac{6x_e}{\ell_{bdg}} + \frac{6x_e^{\ 2}}{\ell_{bdg}^2}\right)}{12\ Z_{eff-n50}}$$

where:

$P_{W,\,ik(j)}$: Dynamic wave pressure, at the mid span, in kN/m^2, specified in Ch 4, Sec 5, [1.4], in load case *i1* and *i2* for loading condition (*j*).

$P_{ld,\,ik(j)}$: Dynamic liquid tank pressure, at the mid span, in kN/m^2, as specified in Ch 4, Sec 6, [1.1.1], in load case *i1* and *i2* for loading condition (*j*).

Pressure acting on both sides of the stiffener, i.e. applied on the attached plate on stiffener side or on opposite side to the stiffener, could be simultaneously considered if relevant in the loading condition.

For the deck longitudinal stiffeners of bulk carriers, no internal pressure from the topside tank is considered.

$P_{bd,\,ik(j)}$: Dynamic dry bulk cargo pressure at the mid span, in kN/m^2, as specified in Ch 4, Sec 6, [2.4.1], in load case *i1* and *i2* for loading condition (*j*).

η_W, η_{ld}, η_{bd}: Pressure normal coefficients, taken as:

η = 1 when the considered pressure is applied on the stiffener side,

η = –1 otherwise.

f_{NL} : Correction factor for the non-linearity of the wave pressure taken as:

$$f_{NL} = 1 \qquad \text{for } z > T_{LC} + 2h_w$$

$$f_{NL} = 2.5\,\frac{z - T_{LC}}{h_w} - 4 \qquad \text{for } T_{LC} + 1.8h_w < z \le T_{LC} + 2h_w$$

$$f_{NL} = 0.5\,\frac{z - T_{LC}}{h_w} - 0.4 \qquad \text{for } T_{LC} + 1.6h_w < z \le T_{LC} + 1.8h_w$$

$$f_{NL} = 0.4 \qquad \text{for } T_{LC} + 1.2h_w < z \le T_{LC} + 1.6h_w$$

$$f_{NL} = 0.7 - 0.25\,\frac{z - T_{LC}}{h_w} \qquad \text{for } T_{LC} + 0.6h_w < z \le T_{LC} + 1.2h_w$$

$$f_{NL} = 1 - 0.75\,\frac{z - T_{LC}}{h_w} \qquad \text{for } T_{LC} - 0.2h_w < z \le T_{LC} + 0.6h_w$$

$$f_{NL} = 0.1875\,\frac{z - T_{LC}}{h_w} + 1.1875 \qquad \text{for } T_{LC} - h_w < z \le T_{LC} - 0.2h_w$$

$$f_{NL} = 1 \qquad \text{for } z \le T_{LC} - h_w$$

h_w : Water head equivalent to the pressure at waterline, in m, as defined in Ch 4, Sec 5.

x_e : Distance, in m, to the hot spot from the closest end of the span ℓ_{bdg}, as defined in Figure 2.

$Z_{eff\text{-}n50}$: Net section modulus, in cm^3, of the considered stiffener calculated considering an effective breadth b_{eff} of attached plating.

b_{eff} : Effective breadth, in mm, of attached plating specified at the ends of the span and in way of end brackets and supports, taken as:

$$b_{eff} = s \cdot min\left(\frac{1.04}{1 + \dfrac{3}{\left(\dfrac{\ell_{bdg}}{s}\left(1 - \dfrac{1}{\sqrt{3}}\right) \cdot 10^3\right)^{1.35}}}; 1.0\right) \qquad \text{for } \frac{\ell_{bdg}}{s}\left(1 - \frac{1}{\sqrt{3}}\right) \times 10^3 \ge 1$$

$$b_{eff} = 0.26\,\ell_{bdg}\left(1 - \frac{1}{\sqrt{3}}\right) \times 10^3 \qquad \text{for } \frac{\ell_{bdg}}{s}\left(1 - \frac{1}{\sqrt{3}}\right) \times 10^3 < 1$$

Figure 2 : Definition of effective span and x_e for hot spot

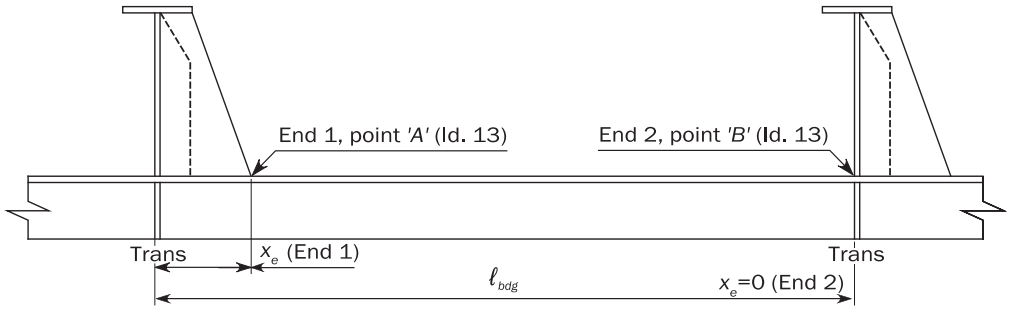

Supported by free flange transverses

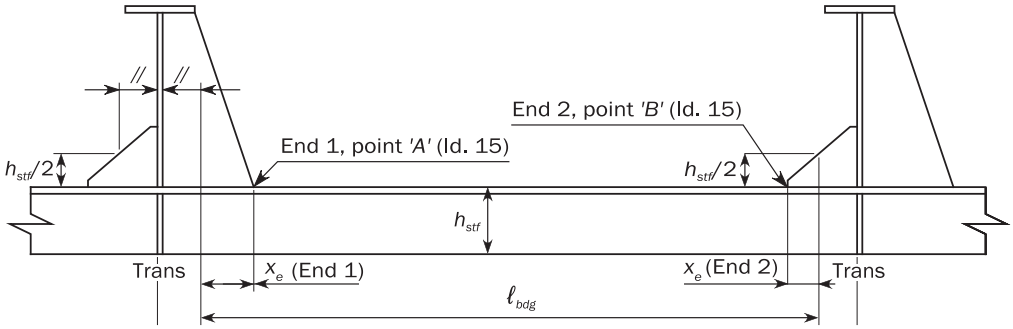

Supported by free flange transverses

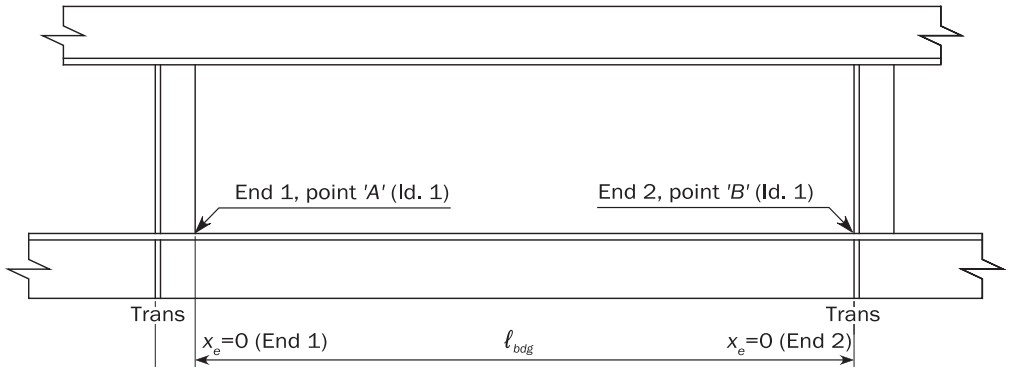

Supported by double skin/transverse bulkheads

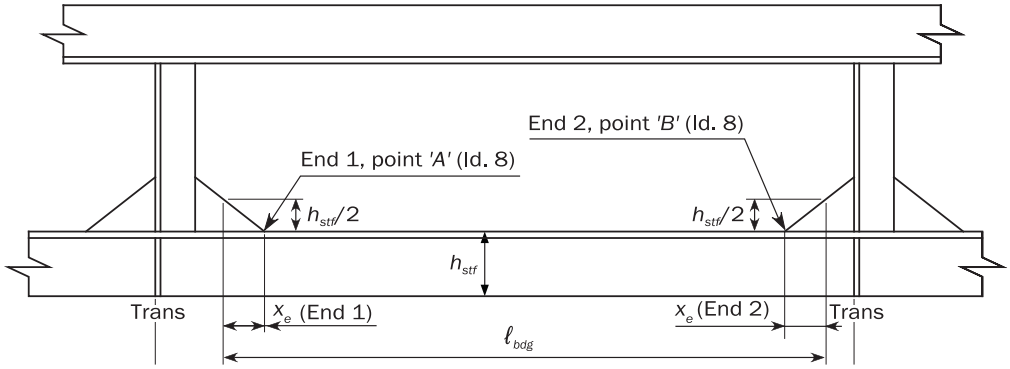

Supported by double skin/transverse bulkheads

4.1.2 Stress due to static pressure

The hot spot stress due to local static pressure, in N/mm^2, for loading condition (j) is obtained from the following formula:

$$\sigma_{LS,(j)} = \frac{K_b\, K_n\, s\, \ell_{bdg}^2\, (\eta_S\, P_{S,\ (j)} + \eta_{ls}\, P_{ls,\ (j)} + \eta_{bs}\, P_{bs,\ (j)}) \left(1 - \frac{6x_e}{\ell_{bdg}} + \frac{6x_e^{\ 2}}{\ell_{bdg}^2}\right)}{12\, Z_{eff-n50}}$$

where:

$P_{S,(j)}$: Static external pressure, in kN/m^2, in loading condition (j) specified in Ch 4, Sec 5, [1.2].

$P_{ls,(j)}$: Static liquid tank pressure, in kN/m^2, in loading condition (j) specified in Ch 4, Sec 6, [1.1.1].

Pressure acting on both sides could be simultaneously considered if relevant in the loading condition.

$P_{bs,(j)}$: Static dry bulk cargo pressure, in kN/m^2, in loading condition (j) specified in Ch 4, Sec 6, [2.4.1].

η_S, η_{ls}, η_{bs}:Pressure normal coefficients, taken as:

η = 1 when the considered pressure is applied on the stiffener side,

η = -1 otherwise.

4.2 Stress due to relative displacement

4.2.1 General

For longitudinal stiffener end connections fitted on transverse web or floor located

- At transverse bulkhead including swash bulkhead of cargo hold or
- In way of stool,

the additional hot spot stress due to the relative displacement is to be considered.

4.2.2 Relative displacement definition

The relative displacement is defined as follows.

- For longitudinals penetrating floors in way of stool the relative displacement is defined as the displacement of the longitudinal measured at the first floor forward (*Fwd*) or afterward (*Aft*) relative to the displacement of the longitudinal at the floor in way of stool.
- For other longitudinals, the relative displacement is defined as the displacement of the longitudinal measured at the first transverse web frame (or floor) forward (*Fwd*) or afterward (*Aft*) relative to the displacement of the longitudinal at the transverse bulkhead including swash bulkhead.

4.2.3 Sign convention

Where the stress at the hot spot location, i.e. at the flange of longitudinal, due to relative displacement is in tension, the sign of the relative displacement is positive.

4.2.4 Oil tankers

The additional hot spot stress due to relative displacement for load case *i1* and *i2* of loading condition (j) for an oil tanker is to be accounted for either using finite element method as described in [4.2.6] or by applying a stress factor on the local dynamic stress component as described in the following:

$$\sigma_{dD,\ ik(j)} = (K_d - 1) \cdot \sigma_{LD,\ ik(j)}$$

where:

$\sigma_{LD,\,ik(j)}$: Local dynamic stress defined in [4.1.1].

K_d : Bending stress factor for longitudinal stiffeners caused by relative displacement between supports, shown on Figure 3, as given in Table 2.

Table 2 : Bending stress factor of longitudinals due to relative displacement between transverse bulkhead (including swash bulkhead) and adjacent web frames (floors)

Location		K_d factor	
		Full load condition	Ballast condition
Bottom longitudinal	Mid position between longitudinal bulkhead, bottom girders or buttress structure	1.50	
	At longitudinal bulkhead, bottom girders (except centre line girder) or buttress structure	1.15	
	At centre line girder	1.30	
	Intermediate position between above bottom positions	Linear interpolation	
Side longitudinals	Mid position between lowest side stringer and deck at side	1.30	1.15
	Lowest side stringer and deck at side	1.15	1.15
	Intermediate positions	Linear interpolation	1.15
Other longitudinals		1.15	

Figure 3 : K_d factor in full load condition for oil tanker with two longitudinal bulkheads

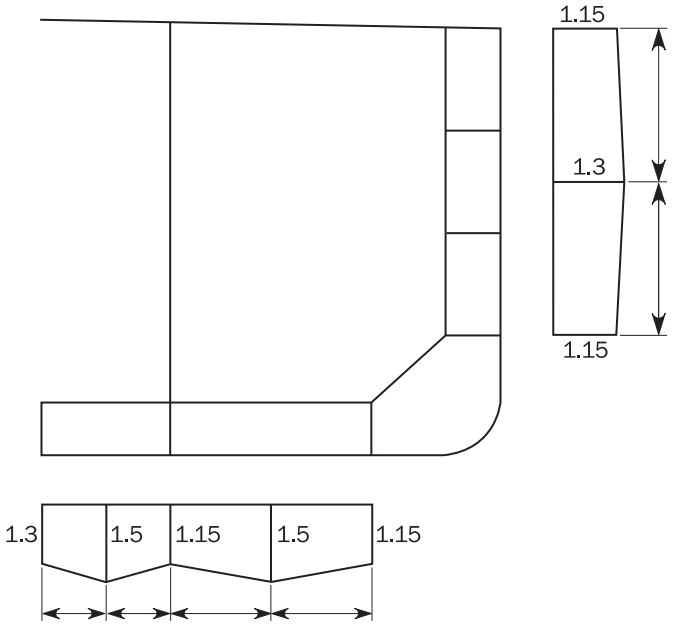

4.2.5 Bulk carriers

The additional hot spot stress due to relative displacement for load case *i1* and *i2* of loading condition (*j*) for a bulk carrier is to be calculated using finite element method as described in [4.2.6].

4.2.6 Stress due to relative displacement derived using FE method

The following procedure is based on a cargo hold model complying with Ch 7, Sec 2, [2] to calculate the stress due to relative displacements. The stress due to relative displacements, in N/mm^2, for load case *i1* and *i2* of loading condition (*j*) for both locations "*a*" and "*f*" is to be calculated directly using the following expression:

$$\sigma_{dD,\ ik(j)} = \begin{cases} K_b\ \sigma_{dFwd-a,\ ik(j)} + K_b\ \sigma_{dAft-a,\ ik(j)} & \text{for location "a"} \\ K_b\ \sigma_{dFwd-f,\ ik(j)} + K_b\ \sigma_{dAft-f,\ ik(j)} & \text{for location "f"} \end{cases} \qquad (k = 1, 2)$$

where:

a, f : Suffix which denotes the location as indicated in Figure 4.

Aft, *Fwd*: Suffix which denotes the direction, afterward (*Aft*) or forward (*Fwd*), from the transverse bulkhead. as shown in Figure 4.

K_b : Stress concentration factor due to bending for the location '*a*' or '*f*' which may correspond to points '*A*' or '*B*' as defined in Table 4.

$\sigma_{dFwd\text{-}a,ik(j)}$, $\sigma_{dAft\text{-}a,ik(j)}$, $\sigma_{dFwd\text{-}f,ik(j)}$, $\sigma_{dAft\text{-}f,ik(j)}$: Additional stress at location '*a*' and '*f*', in N/mm^2, due to the relative displacement between the transverse bulkhead including swash bulkhead or floors in way of stool and the forward (*Fwd*) and afterward (*Aft*) transverse web or floor respectively for load case *i1* and *i2* of loading condition (*j*), taken as:

$$\sigma_{dFwd-a,\ ik(j)} = \frac{3.9\delta_{Fwd,\ ik(j)}\ EI_{Aft-n50}\ I_{Fwd-n50}}{Z_{Aft-n50}\ \ell_{Fwd}\ (\ell_{Aft}\ I_{Fwd-n50} + \ell_{Fwd}\ I_{Aft-n50})}\left(1 - 1.15\ \frac{|x_{eAft}|}{\ell_{Aft}}\right) 10^{-5}$$

$$\sigma_{dAft-a,\ ik(j)} = \left[\frac{3.9\delta_{Aft,\ ik(j)}\ EI_{Aft-n50}\ I_{Fwd-n50}}{Z_{Aft-n50}\ \ell_{Aft}\ (\ell_{Aft}\ I_{Fwd-n50} + \ell_{Fwd}\ I_{Aft-n50})}\left(1 - 1.15\ \frac{|x_{eAft}|}{\ell_{Aft}}\right) - \frac{0.9\delta_{Aft,\ ik(j)}\ EI_{Aft-n50}\ |x_{eAft}|}{Z_{Aft-n50}\ \ell_{Aft}^{\ 3}}\right] 10^{-5}$$

$$\sigma_{dFwd-f,\ ik(j)} = \left[\frac{3.9\delta_{Fwd,\ ik(j)}\ EI_{Aft-n50}\ I_{Fwd-n50}}{Z_{Fwd-n50}\ \ell_{Fwd}\ (\ell_{Aft}\ I_{Fwd-n50} + \ell_{Fwd}\ I_{Aft-n50})}\left(1 - 1.15\ \frac{|x_{eFwd}|}{\ell_{Fwd}}\right) - \frac{0.9\delta_{Fwd,\ ik(j)}\ EI_{Fwd-n50}\ |x_{eFwd}|}{Z_{Fwd-n50}\ \ell_{Fwd}^{\ 3}}\right] 10^{-5}$$

$$\sigma_{dAft-f,\ ik(j)} = \frac{3.9\delta_{Aft,\ ik(j)}\ EI_{Aft-n50}\ I_{Fwd-n50}}{Z_{Fwd-n50}\ \ell_{Aft}\ (\ell_{Aft}\ I_{Fwd-n50} + \ell_{Fwd}\ I_{Aft-n50})}\left(1 - 1.15\ \frac{|x_{eFwd}|}{\ell_{Fwd}}\right) 10^{-5}$$

$I_{Fwd\text{-}n50}$, $I_{Aft\text{-}n50}$: Net moment of inertia, in cm^4, of forward (*Fwd*) and afterward (*Aft*) longitudinal.

$Z_{Fwd\text{-}n50}$, $Z_{Aft\text{-}n50}$: Net section modulus of forward (*Fwd*) and afterward (*Aft*) stiffener, in cm^3.

ℓ_{Fwd}, ℓ_{Aft} : Span, in m, of forward (*Fwd*) and afterward (*Aft*) longitudinal, as shown in Figure 4.

x_{eFwd}, x_{eAft}: Distance, in m, as shown in Figure 2, to the hot spot in location '*a*' or '*f*' from the closest end of ℓ_{Fwd} and ℓ_{Aft} respectively.

$\delta_{Fwd,ik(j)}$, $\delta_{Aft,ik(j)}$: Relative displacement in the direction perpendicular to the attached plate, in mm, between the transverse bulkhead (including swash bulkhead or floor in way of stools) and the forward (*Fwd*) or afterward (*Aft*) transverse web (or floor) as shown in Figure 4.

Figure 4 : Definition of the relative displacement (example of the side longitudinal)

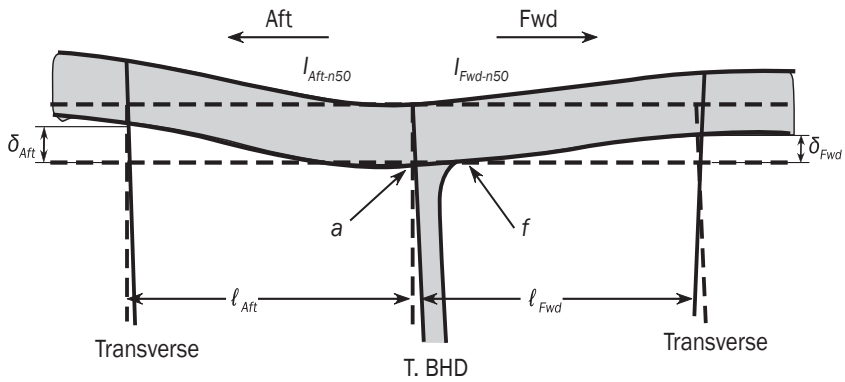

4.2.7 Stress due to relative displacement in still water

The additional hot spot stress, in N/mm^2, in still water, due to the relative displacement in the direction perpendicular to the attached plate between the transverse bulkhead including swash bulkhead or floor in way of stools and the adjacent transverse web or floor is to be obtained according to procedures of [4.2.4] and [4.2.5] for oil tankers and bulk carriers respectively, replacing dynamic local stress σ_{LD} and dynamic pressure with static local stress σ_{LS} and static pressure.

5 STRESS CONCENTRATION FACTORS

5.1 Unsymmetrical stiffener

5.1.1

The stress concentration factor K_n for unsymmetrical flange of built-up and rolled angle stiffeners under lateral load, calculated at the web's mid-thickness position, as shown in Figure 5, is to be taken as:

$$K_n = \frac{1 + \lambda\ \beta^2}{1 + \lambda\ \beta^2\ \psi_z}$$

where:

$$\lambda = \frac{3\left(1 + \frac{\eta}{280}\right)}{1 + \frac{\eta}{40}}$$

$$\eta = \frac{\ell_{bdg}{}^4 10^{12}}{b_{f-n50}{}^3 \cdot t_{f-n50} \cdot h_{stf-n50}{}^2 \left(\frac{4 \cdot h_{stf-n50}}{t_{w-n50}{}^3} + \frac{s}{t_{p-n50}{}^3}\right)}$$

$\beta = 1 - \frac{2 b_{g-n50}}{b_{f-n50}}$ for built-up profiles.

$\beta = 1 - \frac{t_{w-n50}}{b_{f-n50}}$ for rolled angle profiles.

$b_{g\text{-}n50}$: Eccentricity of the stiffener equal to the distance from flange's edge to web's centreline, in mm, as shown in Figure 6.

$b_{f\text{-}n50}$: Net breadth of flange, in mm, as shown in Figure 6.

$t_{f\text{-}n50}$: Net flange thickness, in mm, as shown in Figure 6.

$h_{stf\text{-}n50}$: Net stiffener height, including face plate, in mm, as shown in Figure 6.

$t_{w\text{-}n50}$: Net web thickness, in mm, as shown in Figure 6.

$h_{w\text{-}n50}$: Net web's height stiffener, in mm, as shown in Figure 6.

$t_{p\text{-}n50}$: Net thickness of attached plating, in mm, as shown in Figure 6.

ψ_z : Coefficient given as:

$$\psi_z = \frac{h_{w-n50}^2\ t_{w-n50}}{4\ Z_{n50}}\ 10^{-3}$$

Z_{n50} : Net section modulus, in cm^3, of stiffener with an attached plating breadth equal to the stiffener spacing.

Figure 5 : Bending stress in stiffener with symmetrical and unsymmetrical flange

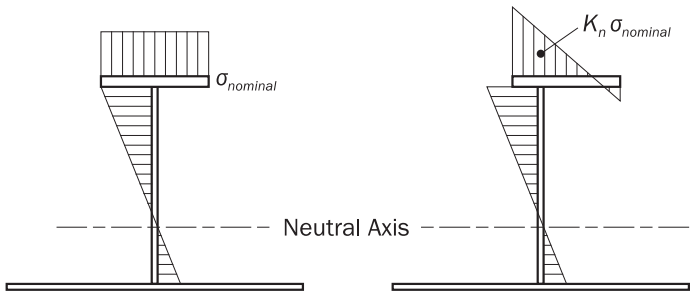

Figure 6 : Stiffener - net scantling

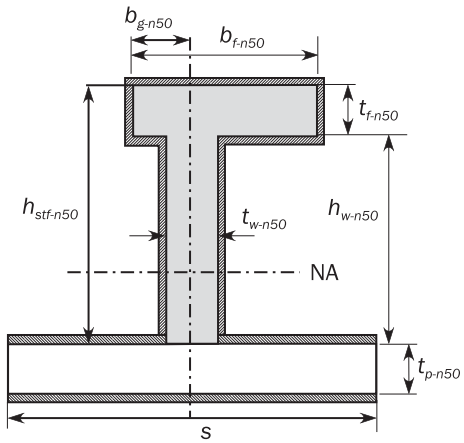

5.1.2 Bulb profiles

For bulb profiles K_n factor is to be calculated using the equivalent built-up profile as shown in Figure 7. The flange of the equivalent built-up profile is to have the same properties as the bulb flange, i.e. same cross sectional area and moment of inertia about the vertical axis and neutral axis position.

For HP bulb profiles, examples of the equivalent built up profile dimensions are listed in Table 3.

Figure 7 : Bulb profile and equivalent built-up profile

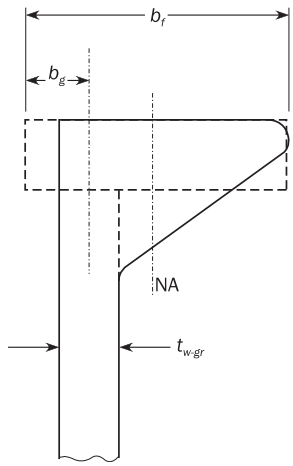

Table 3 : HP equivalent built-up profile dimensions

HP-bulb		Equivalent built-up flange in gross thickness		
Height (mm)	Gross web thickness, $t_{w\text{-}gr}$ (mm)	b_f (mm)	$t_{f\text{-}gr}$ (mm)	b_g (mm)
200	9 – 13	$t_{w\text{-}gr}$ + 24.5	22.9	($t_{w\text{-}gr}$ + 0.9)/2
220	9 – 13	$t_{w\text{-}gr}$ + 27.6	25.4	($t_{w\text{-}gr}$ + 1.0)/2
240	10 – 14	$t_{w\text{-}gr}$ + 30.3	28.0	($t_{w\text{-}gr}$ + 1.1)/2
260	10 – 14	$t_{w\text{-}gr}$ + 33.0	30.6	($t_{w\text{-}gr}$ + 1.3)/2
280	10 – 14	$t_{w\text{-}gr}$ + 35.4	33.3	($t_{w\text{-}gr}$ + 1.4)/2
300	11 – 16	$t_{w\text{-}gr}$ + 38.4	35.9	($t_{w\text{-}gr}$ + 1.5)/2
320	11 – 16	$t_{w\text{-}gr}$ + 41.0	38.5	($t_{w\text{-}gr}$ + 1.6)/2
340	12 – 17	$t_{w\text{-}gr}$ + 43.3	41.3	($t_{w\text{-}gr}$ + 1.7)/2
370	13 – 19	$t_{w\text{-}gr}$ + 47.5	45.2	($t_{w\text{-}gr}$ + 1.9)/2
400	14 – 19	$t_{w\text{-}gr}$ + 51.7	49.1	($t_{w\text{-}gr}$ + 2.1)/2
430	15 – 21	$t_{w\text{-}gr}$ + 55.8	53.1	($t_{w\text{-}gr}$ + 2.3)/2

5.2 Longitudinal stiffener end connections

5.2.1

The stress concentration factors K_a and K_b are given in Table 4 for end connection of stiffeners subjected to axial and lateral loads. The values given in Table 4 for soft toe are valid provided the toe geometry complies with the requirements given in [5.2.5]. The stress concentration factor K_b given for lateral loads are to be used also for stress due to relative displacements.

5.2.2 Other connection types

When connection types other than those given in Table 4 are proposed, the fatigue strength for the proposed connection type is to be assessed either by performing a very fine mesh FE analysis as described in Ch 9, Sec 5 to obtain directly the hot spot stress, or by calculating the stress concentration factor using FE analysis according to [5.3].

5.2.3 Overlapped connection

Overlapped connection types for longitudinal stiffeners, i.e. attachments welded to the web of the longitudinals, are not to be used in the cargo hold region.

5.2.4 End stiffener without connection to web stiffener

Where the web stiffener is omitted or not connected to the longitudinal flange in way of:

- Side shell below 1.1 T_{sc}.
- Bottom.
- Inner hull longitudinal bulkhead below 1.1 T_{sc}.
- Hopper.
- Topside tank sloping plating below 1.1 T_{sc}.
- Inner bottom.

the following is required:

- A complete collar as defined in Figure 8 (i.e. connection type ID 31 of Table 4), or,
- A detail design for cut-outs as described in Ch 9, Sec 6, [2.1].

Equivalence to cut-outs given in Ch 9, Sec 6, [2.1] may be accepted provided it is assessed for fatigue by using comparative FE analysis which is based on hot spot stress around the cut-out in the web plate of the primary supporting member inclusive of the collar, as given in Ch 9, Sec 6, [2.2].

Figure 8 : Complete collar

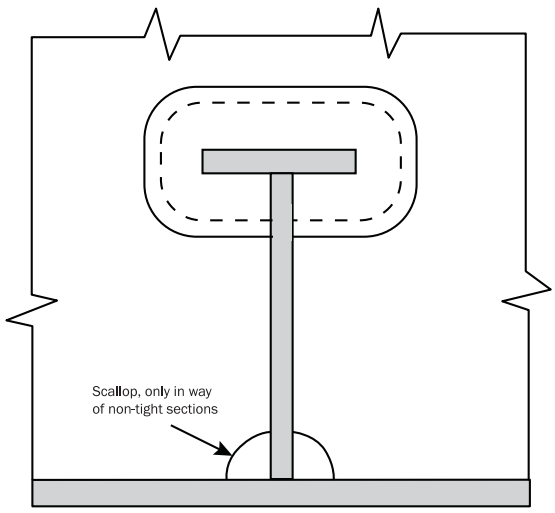

5.2.5 Soft toe of web stiffener and backing bracket

The toe geometry end connection of web stiffener and backing bracket is to comply with the following:

$\theta \leq 20$

$h_{toe} \leq \max(t_{bkt\text{-}gr}; 15)$

where:

θ : Angle of the toe, in deg, as shown in Figure 9.

h_{toe} : Height of the toe, in mm, as shown in Figure 9.

$t_{bkt\text{-}gr}$: Gross thickness of the bracket, in mm.

5.2.6 Recommended detail designs

Recommended detail designs for longitudinal end connections with soft toes and backing brackets are given in Figure 9.

Figure 9 : Detail design for soft toes and backing brackets

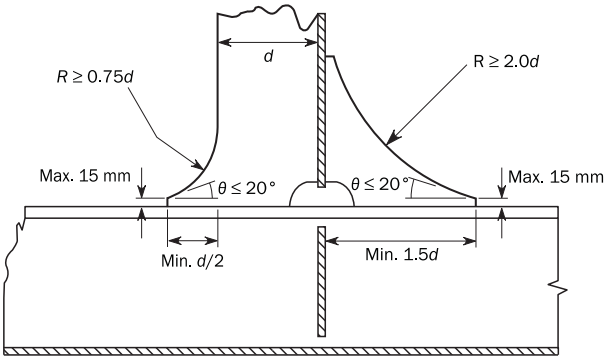

Recommended design of soft toes and backing bracket of pillar stiffeners

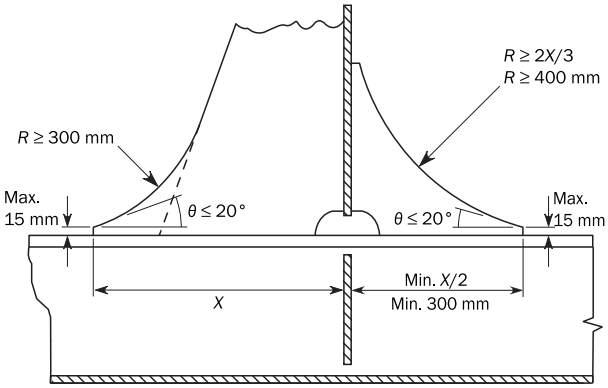

Recommended design of soft toes and backing bracket of tripping brackets

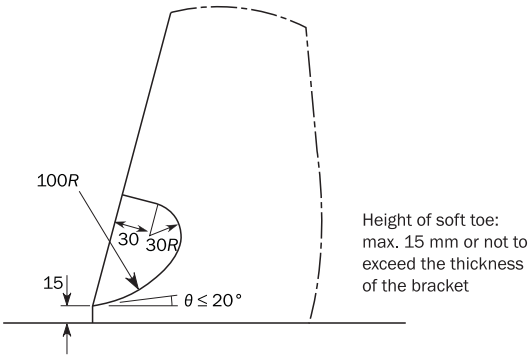

Recommended alternative design of soft toes of tripping brackets

Table 4 : Stress concentration factors

ID	Connection type (2) (3)	Point '*A*'		Point '*B*'	
		K_a	K_b	K_a	K_b
1 (1)	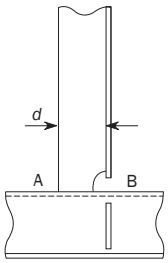	1.28 for $d \leq 150$ 1.36 for $150 < d \leq 250$ 1.45 for $d > 250$	1.40 for $d \leq 150$ 1.50 for $150 < d \leq 250$ 1.60 for $d > 250$	1.28 for $d \leq 150$ 1.36 for $150 < d \leq 250$ 1.45 for $d > 250$	1.60
2 (1)	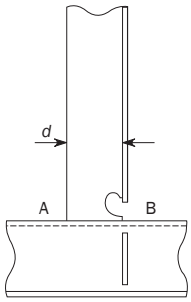	1.28 for $d \leq 150$ 1.36 for $150 < d \leq 250$ 1.45 for $d > 250$	1.40 for $d \leq 150$ 1.50 for $150 < d \leq 250$ 1.60 for $d > 250$	1.14 for $d \leq 150$ 1.24 for $150 < d \leq 250$ 1.34 for $d > 250$	1.27
3	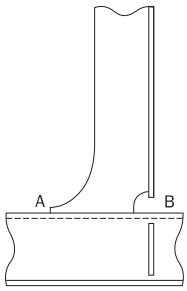	1.28	1.34	1.52	1.67
4	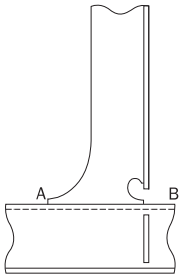	1.28	1.34	1.34	1.34
5	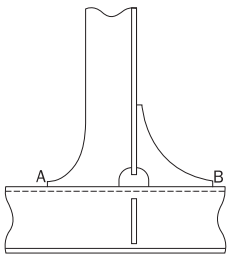	1.28	1.34	1.28	1.34

ID	Connection type (2) (3)	Point '*A*'		Point '*B*'	
		K_a	K_b	K_a	K_b
6	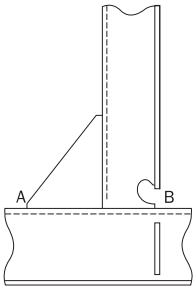	1.52	1.67	1.34	1.34
7	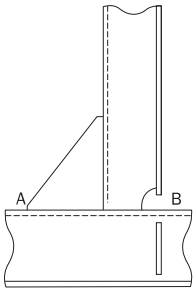	1.52	1.67	1.52	1.67
8	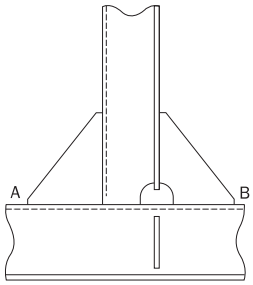	1.52	1.67	1.52	1.67
9	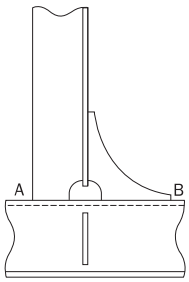	1.52	1.67	1.28	1.34
10	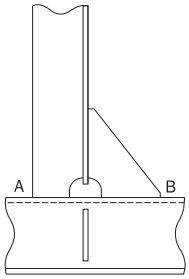	1.52	1.67	1.52	1.67

ID	Connection type (2) (3)	Point '*A*'		Point '*B*'	
		K_a	K_b	K_a	K_b
11	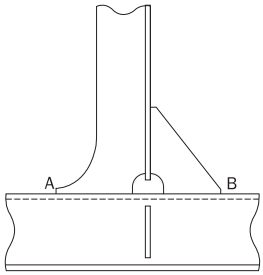	1.28	1.34	1.52	1.67
12	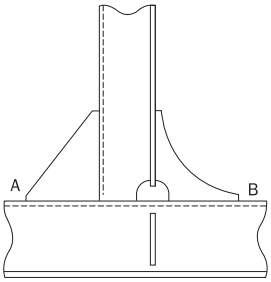	1.52	1.67	1.28	1.34
13	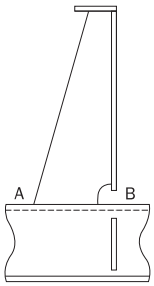	1.52	1.67	1.52	1.67
14	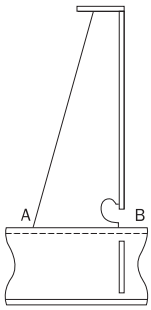	1.52	1.67	1.34	1.34
15	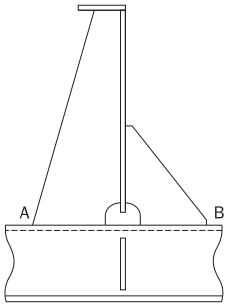	1.52	1.67	1.52	1.67

ID	Connection type (2) (3)	Point '*A*'		Point '*B*'	
		K_a	K_b	K_a	K_b
16	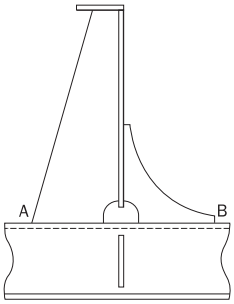	1.52	1.67	1.28	1.34
17	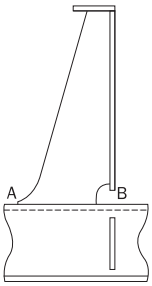	1.28	1.34	1.52	1.67
18	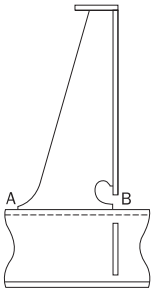	1.28	1.34	1.34	1.34
19	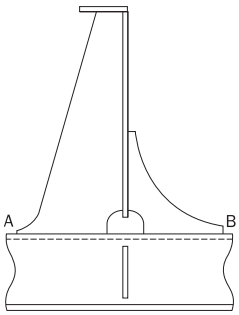	1.28	1.34	1.28	1.34
20	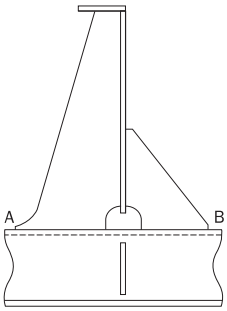	1.28	1.34	1.52	1.67

ID	Connection type (2) (3)	Point '*A*'		Point '*B*'	
		K_a	K_b	K_a	K_b
21	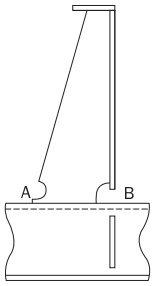	1.28	1.34	1.52	1.67
22	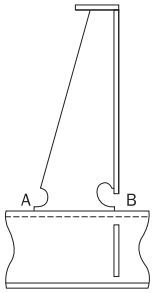	1.28	1.34	1.34	1.34
23	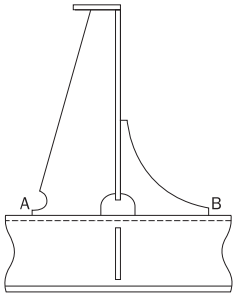	1.28	1.34	1.28	1.34
24	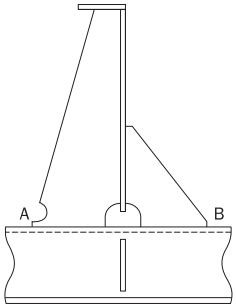	1.28	1.34	1.52	1.67
25 (1)	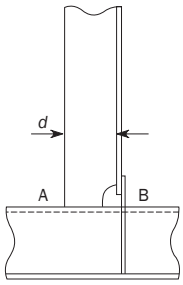	1.28 for $d \leq 150$ 1.36 for $150 < d \leq 250$ 1.45 for $d > 250$	1.40 for $d \leq 150$ 1.50 for $150 < d \leq 250$ 1.60 for $d > 250$	1.14 for $d \leq 150$ 1.24 for $150 < d \leq 250$ 1.34 for $d > 250$	1.25 for $d \leq 150$ 1.36 for $150 < d \leq 250$ 1.47 for $d > 250$

ID	Connection type (2) (3)	Point '*A*'		Point '*B*'	
		K_a	K_b	K_a	K_b
26	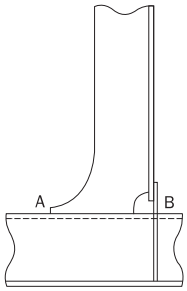	1.28	1.34	1.34	1.47
27	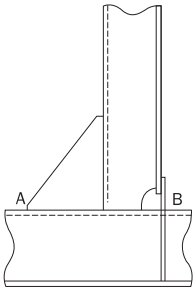	1.52	1.67	1.34	1.47
28	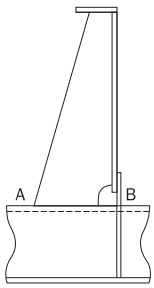	1.52	1.67	1.34	1.47
29	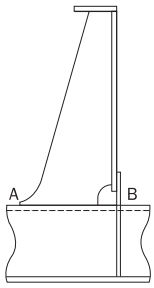	1.28	1.34	1.34	1.47
30	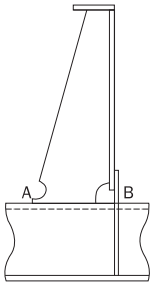	1.28	1.34	1.34	1.47

ID	Connection type (2) (3)	Point '*A*'		Point '*B*'	
		K_a	K_b	K_a	K_b
31 (4)	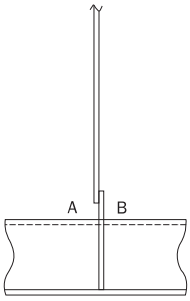	1.13	1.20	1.13	1.20
32 (4) (5) (6)	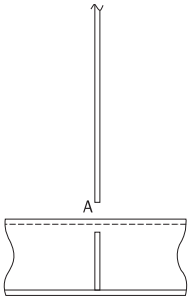	1.13	1.14	N/A	N/A

(1) The attachment length *d*, in mm, is defined as the length of the welded attachment on the longitudinal stiffener flange without deduction of scallop.

(2) Where the longitudinal stiffener is a flat bar and there is a web stiffener/bracket welded to the flat bar stiffener, the stress concentration factor listed in the table is to be multiplied by a factor of 1.12 when the thickness of attachment is thicker than the 0.7 times thickness of flat bar stiffener. This also applies to unsymmetrical profiles where there is less than 8 mm clearance between the edge of the stiffener flange and the attachment, e.g. bulb or angle profiles where the clearance of 8 mm cannot be achieved.

(3) Designs with overlapped connection / attachments, see [5.2.3].

(4) ID. 31 and 32 refer to details where web stiffeners are omitted or not connected to the longitudinal stiffener flange. See [5.2.4]

(5) For connection type ID. 32 with no collar and/or web plate welded to the flange, the stress concentration factors provided in this table are to be used irrespective of slot configuration.

(6) The fatigue assessment point 'A' is located at the connection between the stiffener web and the transverse web frame or lug plate.

5.3 Alternative design

5.3.1 Derivation of alternative stress concentration factors

Upon agreement by the Society, the geometrical stress concentration factors for alternative designs are to be calculated by a very fine mesh FE analysis according to the requirements given in Ch 9, Sec 5. Additional requirements for derivation of geometrical stress concentration factors for stiffener end connections using very fine mesh FE analysis are given below:

a) FE model extent: the FE model, as shown in Figure 10, is to cover at least four web frame spacings in the longitudinal stiffener direction with the detail to be considered located at the middle frame. The same type of end connection is to be modelled at all the web frames. In the transverse direction, the model may be limited to one stiffener spacing.

b) Load application: in general, two loading cases are to be considered:

- Axial loading by enforced displacement applied to the model ends and
- Lateral loading by unit pressure load applied to the shell plating.

c) Boundary conditions:

- Symmetry conditions are applied along the longitudinal cut of the plate flange, along transverse and vertical cuts on web frames and on top of the web stiffener.

- For lateral pressure loading: the model is to be fixed in all degrees of freedom at both forward and aft ends.
- For axial loading: the model is to be fixed for displacement in the longitudinal direction at the aft end of the model while enforced axial displacement is applied at the forward end, or vice versa.

d) FE mesh density: At the location of the hot spots under consideration, the element size is to be in the order of the thickness of the stiffener flange or 10 mm depending on the type of stiffener. In the remaining part of the model, the element size is to be in the order of s/10, where s is the stiffener spacing.

Figure 10 : Fine mesh finite element model for derivation of geometrical stress concentration factor (example of stiffener with flange)

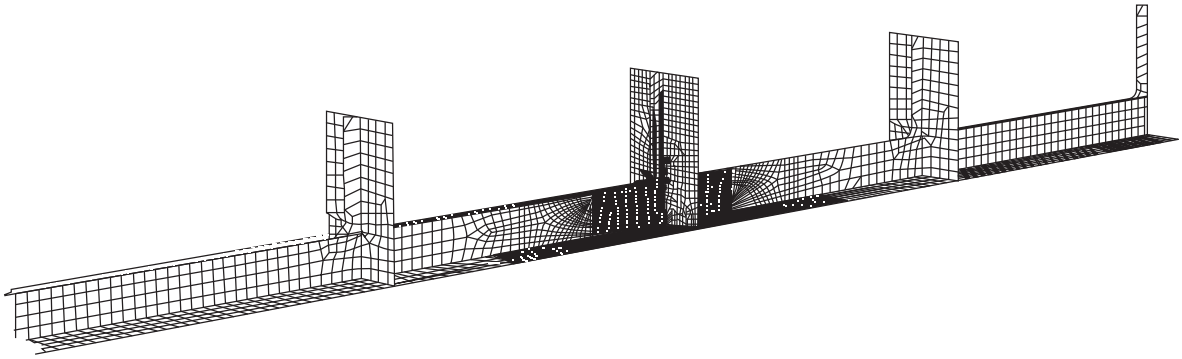

For the 2 loading cases specified above, the stress concentration factors are determined as follows:

- For the axial loading case:

$$K_a = \frac{\sigma_{HSAx}}{\sigma_{NomAx}}$$

- For the bending loading case:

$$K_b = \frac{\sigma_{HSBd}}{\sigma_{NomBd}}$$

σ_{HSAx} : Hot spot stress, in N/mm^2, determined at the stiffener flange for the axial load.

σ_{NomAx} : Nominal axial stress, in N/mm^2, calculated at the stiffener flange according to [3.1] for the axial load applied for the FE calculation.

σ_{HSBd} : Hot spot stress, in N/mm^2, determined at the stiffener flange for the unit pressure load.

σ_{NomBd} : Nominal bending stress, in N/mm^2, calculated at the stiffener flange according to [4.1] in way of the hot spot for the unit pressure load applied for the FE calculation.

The derivation of geometrical stress concentration factors for alternative designs is to be documented and provided to the Society.

SECTION 5
FINITE ELEMENT STRESS ANALYSIS

1 GENERAL

1.1 Applicability

1.1.1

This section applies to fatigue assessment by finite element stress analysis. The methods are based on the hot spot stress approach and requirements are given for both welded and non-welded hot spots. The hot spot stress takes into account structural discontinuities due to the structural detail of the welded joint, but not taking into account the notch effect at the weld toe.

1.1.2

The hot spot stress is generally highly dependent on the finite element model used for representation of the structure and the procedure used to calculate the hot spot stress. No other methods than those described in this Section is to be adopted for calculation of FE based hot spot stress.

1.1.3

Two types of hot spots, denoted '*a*' and '*b*' are described in Table 1. These are defined according to their location on the plate and their orientation to the weld toe as illustrated in Figure 1.

Table 1 : Types of hot spots

Type	Description
a	Hot spot at the weld toe on plate surface
b	Hot spot at the weld toe around the plate edge

Figure 1 : Types of hot spots

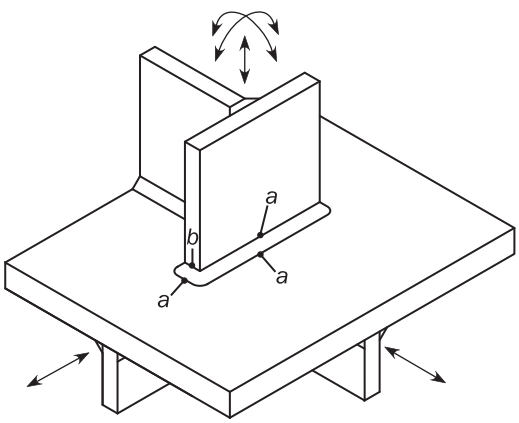

1.1.4

The method for calculation of hot spot stress at weld toe for any welded details is given in [3.1] except for web-stiffened cruciform joints. The method for calculation of local stress for non-welded area is given in [3.2].

1.1.5

The method for calculation of hot spot stress at web-stiffened cruciform joints such as hopper knuckle connection, transverse bulkhead lower stool to inner bottom connection and horizontal stringer heel is given in [4].

1.1.6

Attention is to be given to limitations of the hot spot stress methodology for simple connections given in [5].

2 FE MODELLING

2.1 General

2.1.1

Evaluation of hot spot stresses for fatigue assessment requires the use of very fine finite element meshes in way of areas of high stress concentration. These very fine mesh zones may be incorporated into the global model as shown in Figure 2. The coarse mesh model of the cargo holds is to be made according to Ch 7, Sec 2, [2.4]. Alternatively, this very fine mesh analysis can be carried out by means of separate local finite element models with very fine mesh zones in conjunction with the boundary conditions obtained from a global model of the cargo holds. Typical local finite element models of a hopper knuckle with very fine mesh are shown in Figure 3, Figure 4, and Figure 5.

2.1.2 Corrosion model

The very fine mesh finite element models used for fatigue assessment are to be made using net thickness, t_{n50}, in accordance with Ch 9, Sec 1, [5.1].

2.1.3 Separate local FE model

Where a separate local finite element model is used, the extent of the local model is to be such that the calculated stresses are not significantly affected by the imposed boundary conditions and application of loads. The boundary of the fine mesh model is to be taken at adjacent primary supporting members such as girders, stringers and floors in the cargo hold model as far as practicable. Transverse web frames, stringer plates and girders at the boundaries of the local model need not be represented in the local model.

2.1.4

The evaluation of hot spot stress for '*a*' type hot spot is to be based on shell element of mesh size $t_{n50} \times t_{n50}$, where t_{n50} is the net thickness of the plate in way of the considered hot spot. The evaluation of hot spot stress for a '*b*' type hot spot is to be based on shell element of mesh size 10×10 mm. The aforementioned mesh size is to be maintained within the very fine mesh zone, extending over at least 10 elements in all directions from the fatigue hot spot position. The transition of element size between the coarser mesh and the very fine mesh zone is to be done gradually and an acceptable mesh quality is to be maintained. This transition mesh is to be such that a uniform mesh with regular shape gradually transitions from smaller elements to larger ones. An example of the mesh transition in way of the side frame bracket toe is shown in Figure 6.

2.1.5

Four-node shell elements with adequate bending and membrane properties are to be used inside the very fine mesh zone. The four node element is to have a complete linear field of in-plane stresses and hence pure in-plane bending of the element can be exactly represented. In case of steep stress gradients, 8 node thin shell elements are to be used if deemed practical. The shell elements are to represent the mid plane of the plating. For practical purposes, adjoining plates of different thickness may be assumed to be median line aligned, i.e. no staggering in way of thickness change is required. The geometry of the weld and construction misalignment is not required to be modelled.

2.1.6

All structure in close proximity to the very fine mesh zones is to be modelled explicitly with shell elements. Triangular elements are to be avoided where possible. Use of extreme aspect ratio (e.g. aspect ratio greater than 3) and distorted elements (e.g. element's corner angle less than 60 deg or greater than 120 deg) are to be avoided.

2.1.7

Where stresses are to be evaluated on a free edge, such as cut-outs for stiffener connections at web frames, edge of plating and hatch corners, beam elements having the same depth as the adjoining plate thickness and negligible width is to be used to obtain the required local edge stress values.

2.2 Hopper knuckle welded connection

2.2.1

In addition to the general requirements in [2.1], the modelling requirements in this sub-article are applicable to the modelling of bilge hopper lower-knuckle and upper-knuckle welded connections.

2.2.2

Where a separate local finite element model is used, the minimum extent of the local model is to be according to the following:

a) Longitudinally, the model is to cover two web frame spaces (i.e. one web frame space extending either side of the transverse web frame of interest). Transverse web frames at the end of the local model need not be represented in the local model.

b) Vertically, the model is to extend from the baseline to the lower stringer in the double side water ballast tank for tankers and double skin bulk carriers. For single skin bulk carriers, the model is to extend from the baseline to the top of the hopper ballast tank. Where a fatigue assessment is also carried out for the upper knuckle connection, the model is to be extended to four longitudinal spaces above the lower stringer in the double side ballast tank.

c) Transversely, for the hopper lower knuckle, the model is to extend from the ship side to 4 longitudinal spaces inboard of the double bottom side girder. For the upper hopper knuckle, the model is to extend from the ship side to the double bottom side girder.

2.2.3

Any scarfing brackets on the web frame adjoining the inner bottom plating, the first longitudinal stiffeners away from the knuckle hot spot as well as any carlings and brackets offset from the main frames are to be modelled explicitly using shell elements. Longitudinal stiffeners further away from the knuckle may be modelled by beam elements. The inner bottom plate 'overhang' outboard of the girder is to be modelled using shell elements up to the extent of the scarfing bracket. Away from the scarfing bracket in longitudinal direction, the inner bottom plate 'overhang' may be modelled using line elements of equivalent the area. Any perforations, such as cut-outs for cabling, pipes and access that are within one stiffener space from the knuckle point are to be modelled explicitly.

2.2.4

Figure 3, Figure 4 and Figure 5 show typical local finite element models of the hopper knuckle connection and close-up views of the $t_{n50} \times t_{n50}$ mesh zone.

2.3 Horizontal stringer heel connection

2.3.1

In addition to the general requirements in [2.1], the modelling requirements in this sub-article are applicable to the modelling of horizontal stringer heel connections.

2.3.2

Where a separate local finite element model is used, the minimum extent of the local model is to be according to the following:

a) Longitudinally, the model is to cover one web frame space away from the stringer heel to at least one web frame space ahead of the stringer toe. Transverse web frames at the end of the local model need not be represented in the local model.

b) Vertically, the model is to extend at least to the next stringer level above and below the concerned stringer heel location.

c) Transversely, the model is to extend from the ship side to a half of the tank width in case of a stringer heel located at the inner hull longitudinal bulkhead. In case of stringer heel located at other longitudinal bulkheads the model is to extend transversely up to half the tank width on either side of the concerned stringer heel.

2.3.3

Shell elements are to be used for modelling the stringer heel connection and adjacent stiffeners. The first longitudinal and vertical stiffeners away from the heel hot spot are to be modelled explicitly using shell elements. Longitudinal and vertical stiffeners further away from the hot spot may be modelled by beam elements. Figure 7 shows a typical finite element model of the stringer heel connection with the very fine mesh zone having $t_{n50} \times t_{n50}$ mesh size.

2.4 Lower stool – inner bottom connection

2.4.1

In addition to [2.1], the modelling requirements in this sub-article are applicable to the assessment of the connection between lower stool plate and inner bottom plate.

2.4.2

The minimum extent of the local model is as follows:

a) Vertically, from the bottom shell to a level at least 2 m above the inner bottom or up to the connection of the corrugation to the upper shelf plate of the lower stool, whichever is greater.

b) The local model is to be extended transversely to the nearest diaphragm web in the lower stool on each side of the fine mesh zone (i.e. to the adjacent double bottom girder). The end diaphragms need not be modelled.

c) Longitudinally, the model is to cover one floor space aft of the aft lower stool – inner bottom connection and one floor space forward of the forward lower stool – inner bottom connection.

2.4.3

Diaphragm webs, brackets inside the lower stool and stiffeners on the stool plates are to be modelled at their actual positions within the extent of the local model. Shell elements are to be used for modelling of diaphragms and brackets. The first vertical or horizontal stiffeners on the lower stool plate and the first longitudinal stiffeners on the inner bottom are to be represented by shell elements, other stiffeners may be represented by beam elements. Figure 8 shows a typical finite element model of the lower stool - inner bottom connection with very fine mesh zone having $t_{n50} \times t_{n50}$ mesh size.

2.5 Lower stool – corrugated bulkhead connection

2.5.1

In addition to [2.1], the modelling requirements in this sub-article are applicable to the assessment of the connection between lower stool plate and corrugated bulkhead.

2.5.2

The minimum extent of the local model is as follows:

a) Vertically, from the bottom of the lower stool to a level at least 2 m above the upper shelf plate of the lower stool.

b) The local model is to be extended transversely to the nearest diaphragm web in the lower stool on each side of the fine mesh zone (i.e. to the adjacent double bottom girder). The end diaphragms need not be modelled.

c) Longitudinally, the model is to cover one floor space aft of the aft lower stool – inner bottom connection and one floor space forward of the forward lower stool – inner bottom connection.

2.5.3

Diaphragm webs, brackets inside the lower stool and stiffeners on the stool plates are to be modelled at their actual positions within the extent of the local model. Shell elements are to be used for modelling of diaphragms, and bracket. The first vertical or horizontal stiffeners on the lower stool plate are to be represented by shell elements, other stiffeners may be represented by beam elements. Figure 9 shows a typical finite element model of the lower stool - corrugated bulkhead connection with very fine mesh zone having $t_{n50} \times t_{n50}$ mesh size.

2.6 Side frame bracket to hopper sloping plate connections

2.6.1

In addition to the general requirements in [2.1], the modelling requirements in this sub-article are applicable to the modelling of a side frame to hopper sloping plate bracket connections.

2.6.2

Shell elements are to be used for modelling the side frame bracket, hopper tank sloping plate and adjacent stiffeners. Figure 10 shows a typical finite element model of the side frame bracket to hopper sloping plate connection with the very fine mesh zone having $t_{n50} \times t_{n50}$ mesh size.

2.6.3

Where a separate local finite element model is used, the minimum extent of the local model is to be according to the following:

a) Longitudinally, the model is to cover two web frame spaces (i.e. one web frame space extending either side of the bracket connection of interest). Transverse web frames at the end of the local model need not be represented in the local model.

b) Vertically, the model is to extend from the baseline to the bottom of the topside tank sloping plate.

c) Transversely, the model is to extend from the ship side to the adjacent double bottom side girder.

2.7 Side frame bracket to the upper sloping / flat bottom wing tank connections

2.7.1

In addition to the general requirements in [2.1], the modelling requirements in this sub-article are applicable to the modelling of a side frame bracket to upper sloping/flat bottom wing tank connections.

2.7.2

Shell elements are to be used for modelling the side frame bracket, upper sloping or flat bottom plate and adjacent stiffeners. Figure 11 shows a typical finite element model of the side frame bracket to upper sloping wing tank with the very fine mesh zone having $t_{n50} \times t_{n50}$ mesh size.

2.7.3

Where a separate local finite element model is used, the minimum extent of the local model is to be according to the following:

a) Longitudinally, the model is to cover two web frame spaces (i.e. one web frame space extending either side of the bracket connection of interest). Transverse web frames at the end of the local model need not be represented in the local model.

b) Vertically, the model is to extend from the deck level to the top of the hopper sloping plate.

c) Transversely, the model is to extend from the ship side to the end of upper sloping/flat bottom wing tank.

2.8 Hatch corners and hatch coaming end bracket

2.8.1

In addition to the general requirements in [2.1], the modelling requirements in this sub-article are applicable to the modelling of hatch corners/hatch coaming end bracket. The selection of hatch corners / hatch coaming end bracket for fatigue analysis is to be determined based on the level of stresses obtained from the cargo hold FE analysis.

2.8.2

Where separate local finite element models are used, the model extents are to be according to the following:

a) Transversely, over the half-breadth of the ship,

b) Longitudinally, from the midpoint of the cargo hold in which the concerned hatch corners/hatch coaming end bracket is located to the adjacent cargo hold up to and including the full width of the cross deck nearest to the concerned hatch corners/hatch coaming end bracket.

c) Vertically, from the top plate of coaming to the intersection of the topside tank sloping plate with the side or inner side shell.

2.8.3

The primary supporting members and coaming stays are to be represented by shell finite elements having both membrane and bending properties. Figure 12 shows a typical FE model of the toe connection of a longitudinal hatch coaming end bracket to the deck plating with the very fine mesh zone having $t_{n50} \times t_{n50}$ mesh size.

2.8.4

The level of FE mesh refinement is to be such as to enable stress concentrations arising from the hatch corner geometry to be captured in the hot spot stress. The plate edge of hatch opening corners at the level of upper deck and cross deck structure is to be assessed. The free edge of hatch coaming end bracket and bracket toe welded connection to the deck plating are also to be assessed. Beam elements having the same depth as the adjoining plate thickness and negligible width are to be used at a plate edge of hatch opening corners or free edge of the hatch coaming end bracket to obtain the required local edge stress values as outlined in [2.1.7].

2.8.5

The local structural geometry, particularly in the areas of concern, is to be represented. The hatch corner area is to be meshed using elements with a sufficiently small size to capture the local stress on the edge. In general, a minimum of 15 elements in a 90 degree arc are to be used to describe the curvature of the hatchway radius plating for a rounded corner (see Figure 13). For an elliptical or parabolic corner, a minimum of 15 elements are to be used from the inboard radius end to a point on the edge located at half the longitudinal distance of the semi- major axis. A total of 20 elements are to be used at the elliptical edge of the hatch corner (see Figure 14). However, the element edge dimensions along the free edge of the radius need not be less than the thickness of the plating being represented and also should not be greater than 5 times the thickness of the plating being represented. Except where necessary from practical meshing

considerations, this level of idealisation is to be maintained over the bracket plating and is to extend into the stringer plating, deck plating and coaming. Mesh transitions should not be arranged close to bracket toes.

2.9 Boundary conditions

2.9.1 Cargo hold model

The boundary conditions to be applied to the ends of the cargo hold model are to be in accordance with Ch 7, Sec 2, [2.5].

2.9.2 Separate local finite element model

Where a separate local finite element model is used for evaluating the hot spot stress range, the boundary conditions and application of loads are to be in accordance with Ch 7, Sec 3, [4.2].

Figure 2 : Very fine mesh areas incorporated directly into the cargo hold model

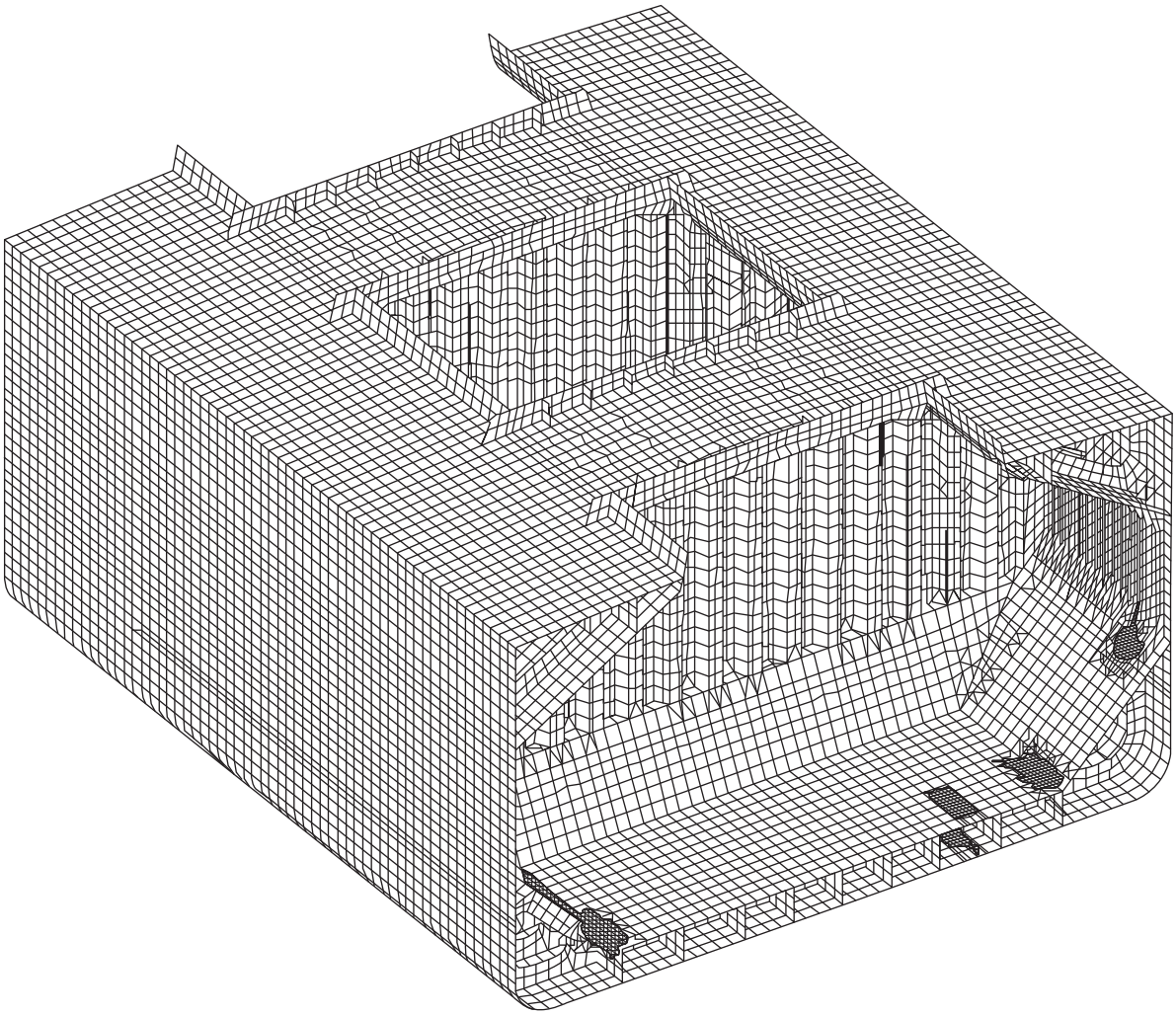

Figure 3 : Local very fine mesh model ($t_{n50} \times t_{n50}$) of hopper knuckle connection between inner bottom and hopper plate

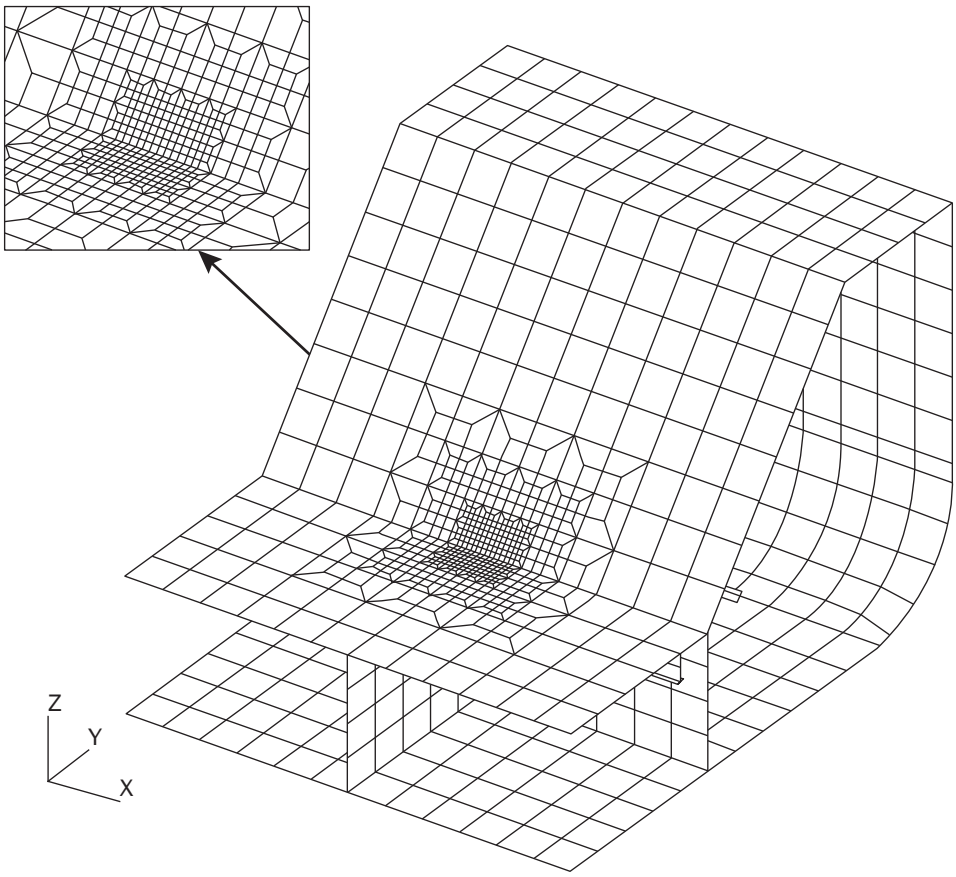

Figure 4 : Local very fine mesh model ($t_{n50} \times t_{n50}$) of hopper knuckle connection between inner bottom, hopper plate, web frame, girder and bracket

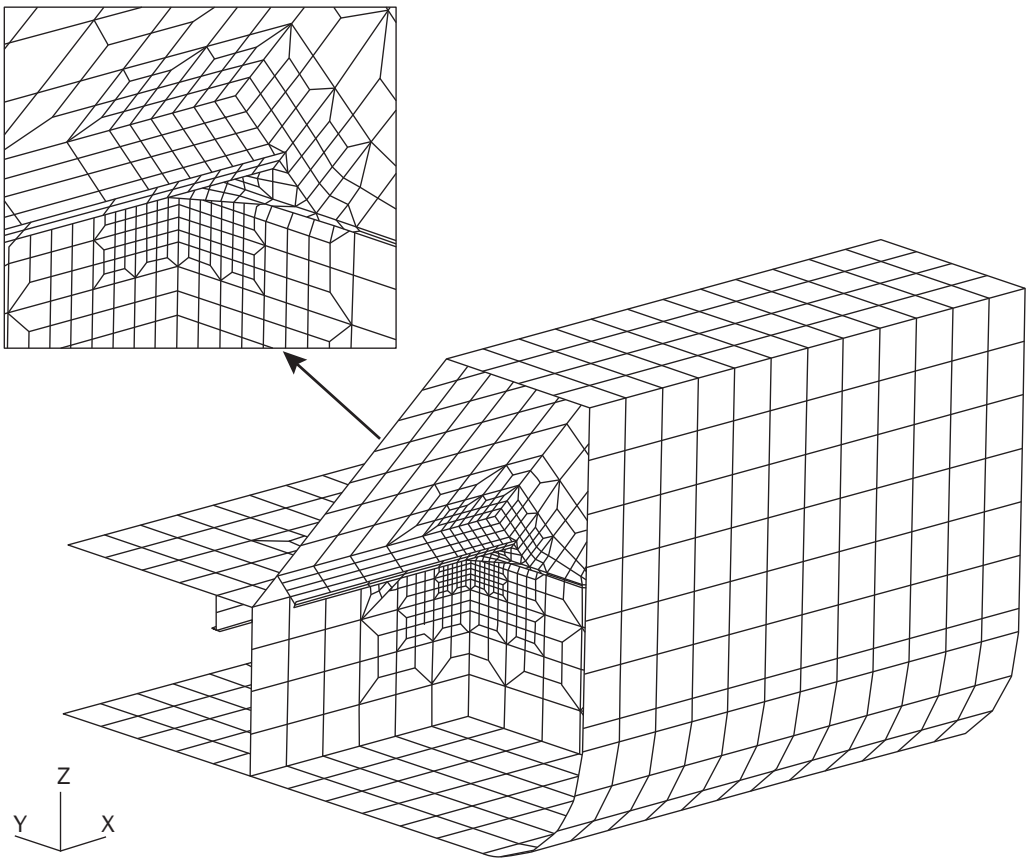

Figure 5 : Local very fine mesh model ($t_{n50} \times t_{n50}$) of upper hopper knuckle connection between inner side shell and hopper plate

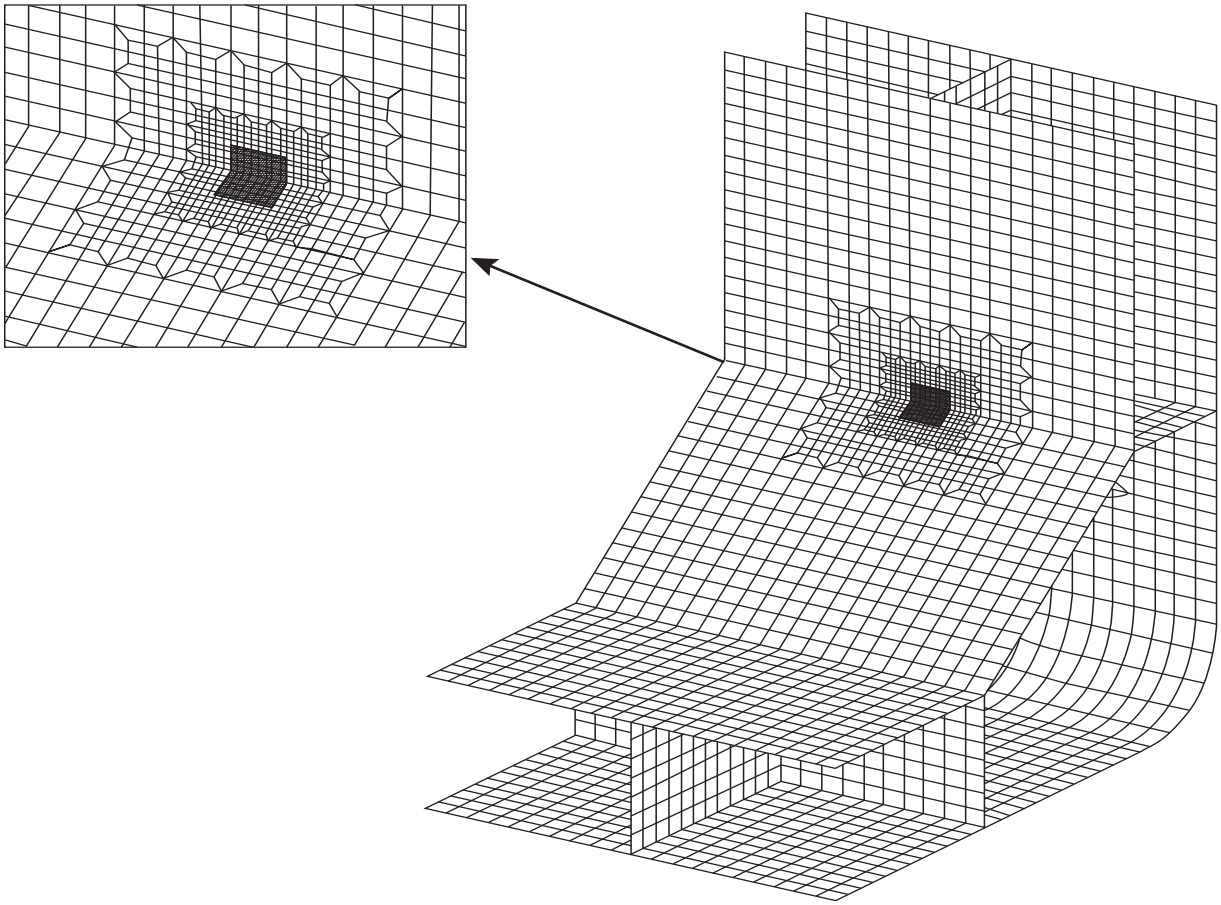

Figure 6 : Transition area between coarse and very fine mesh

Figure 7 : Finite element model of stringer heel connection

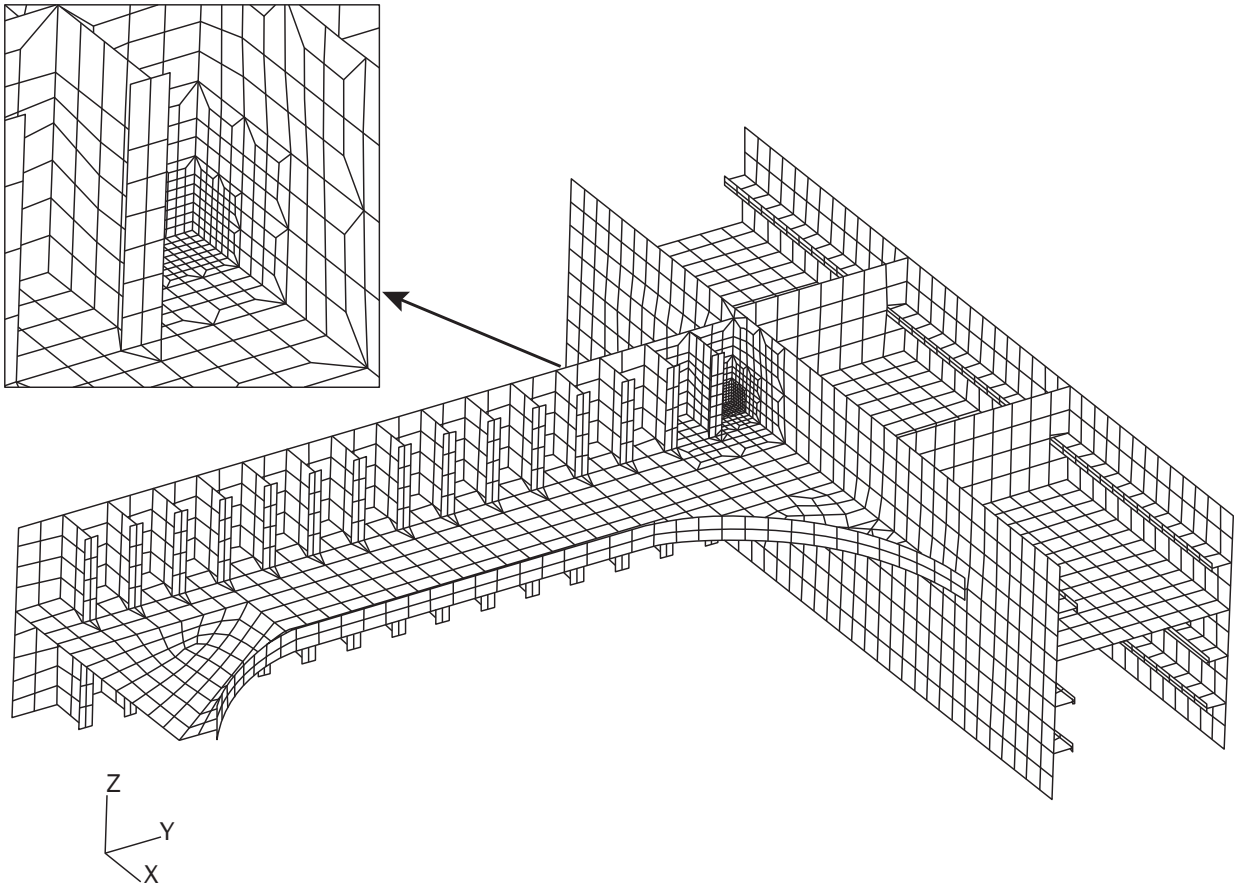

Figure 8 : Local FE model of lower stool connection between inner bottom and lower stool plate, $t_{n50} \times t_{n50}$ mesh

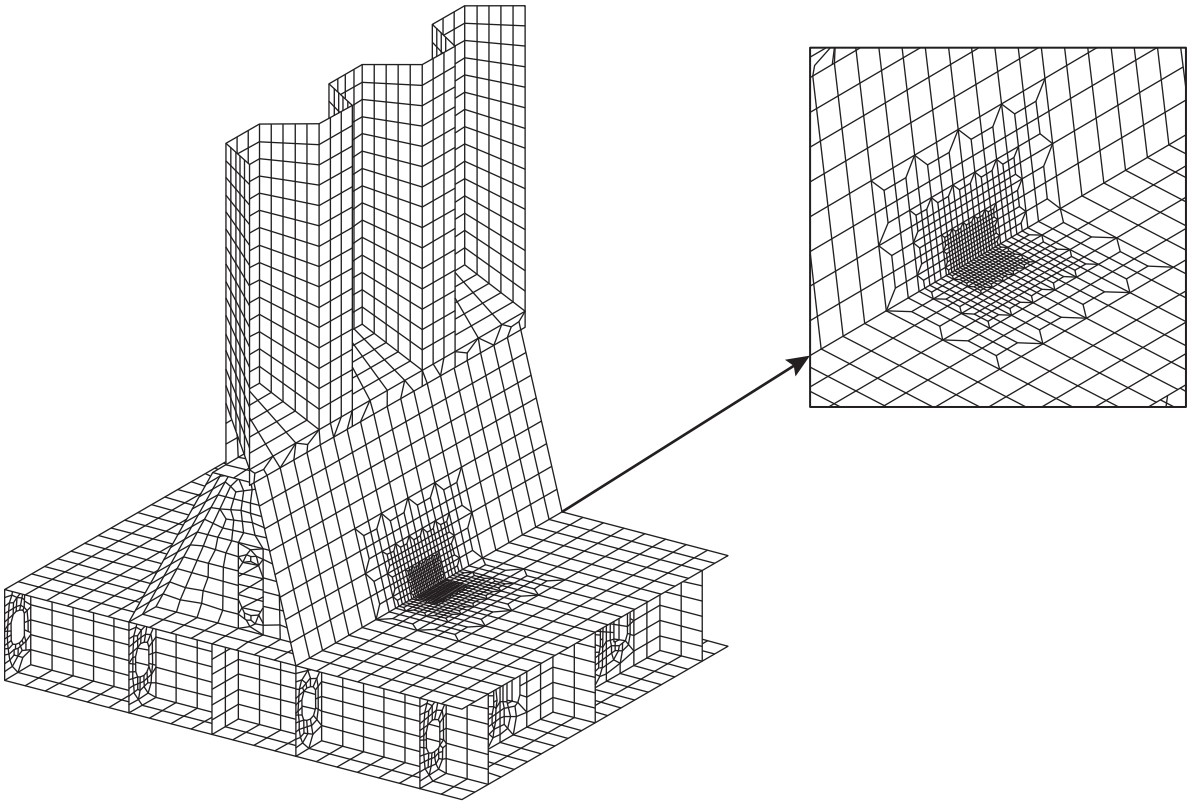

Figure 9 : Local finite element model of lower stool - corrugated bulkhead connection between corrugated bulkhead and lower stool plate, $t_{n50} \times t_{n50}$ mesh

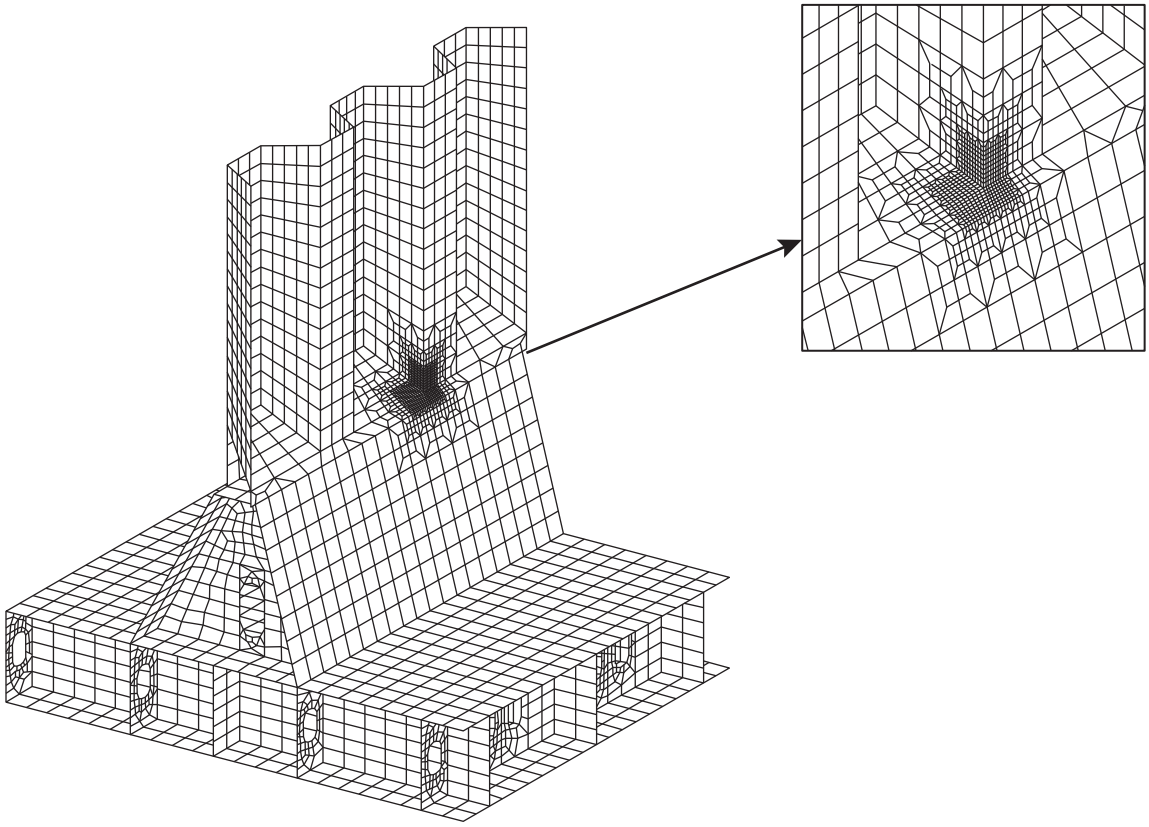

Figure 10 : Local finite element model of side frame bracket, $t_{n50} \times t_{n50}$ mesh

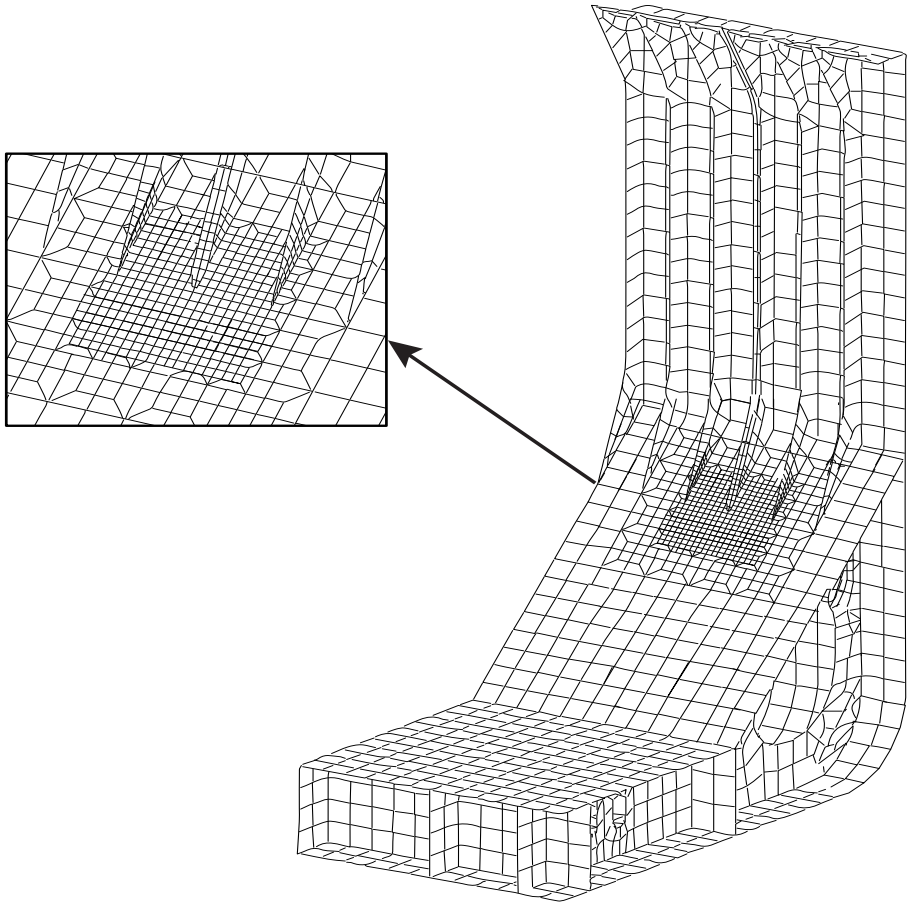

Figure 11 : Local FE model of upper side frame bracket, $t_{n50} \times t_{n50}$ mesh

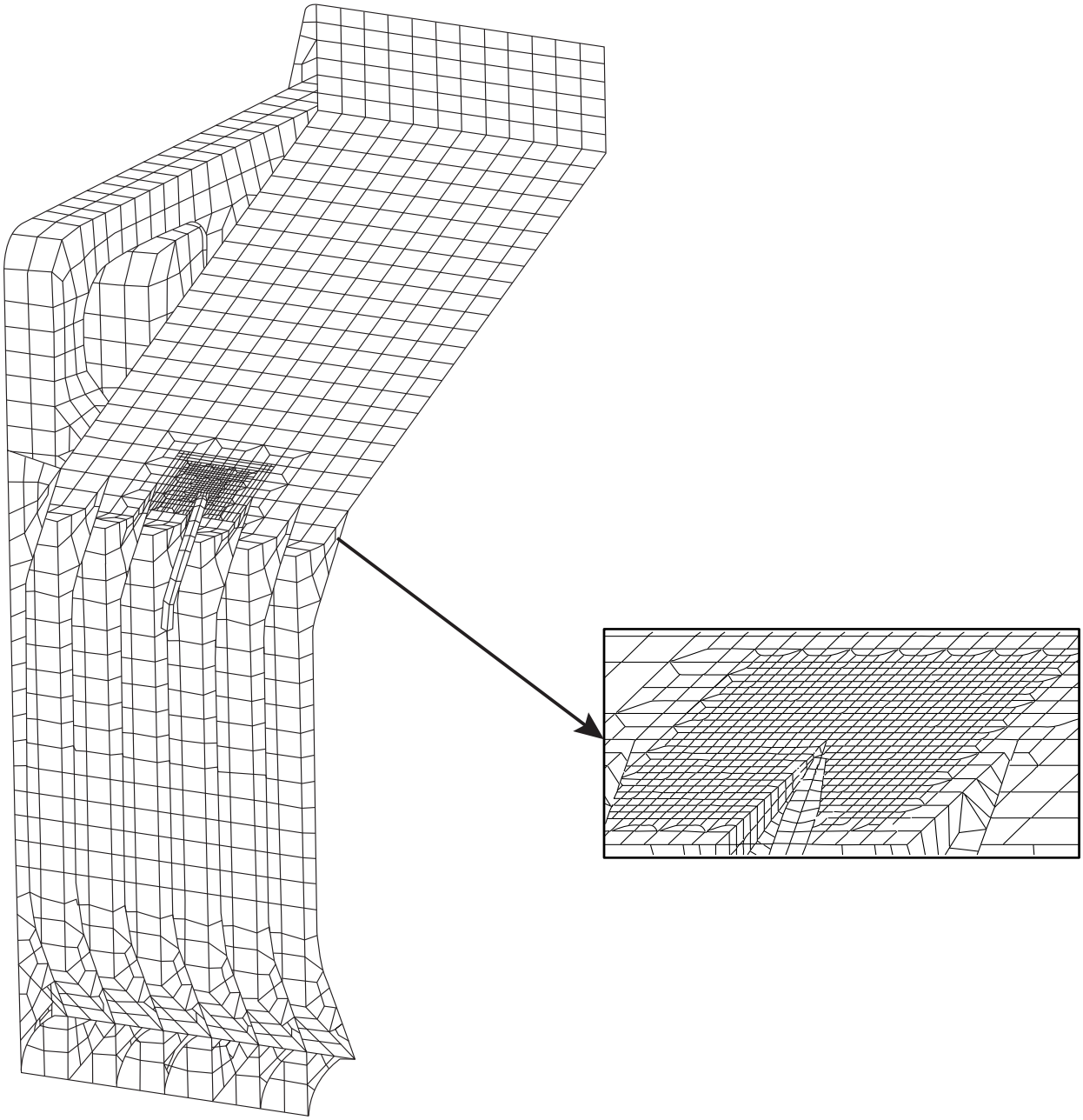

Figure 12 : Local FE model of longitudinal hatch coaming end bracket to the deck plating with very fine mesh zone, $t_{n50} \times t_{n50}$ mesh

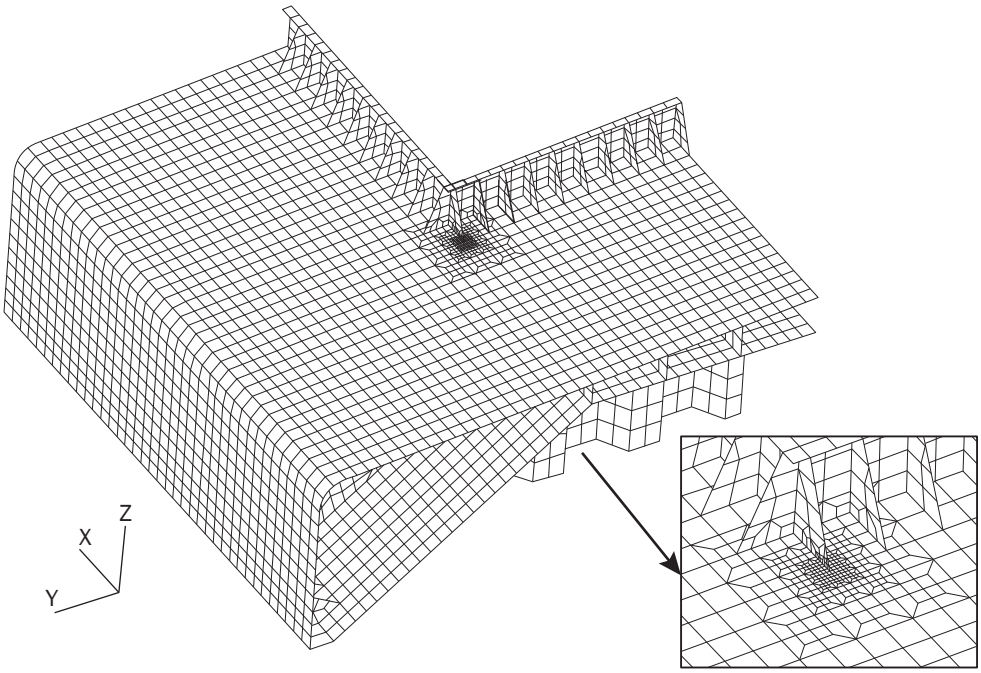

Figure 13 : Mesh density for rounded hatch corner

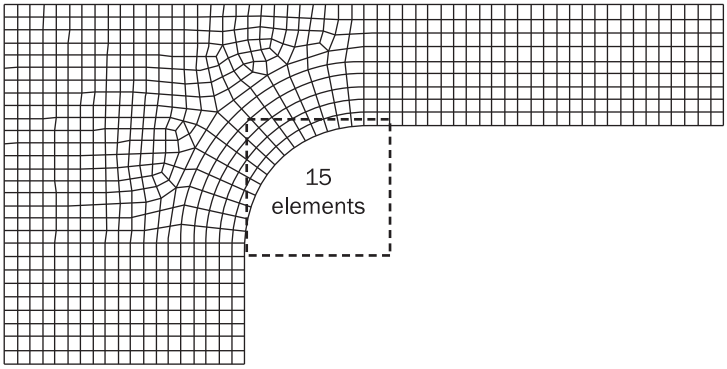

Figure 14 : Mesh density for elliptical hatch corner

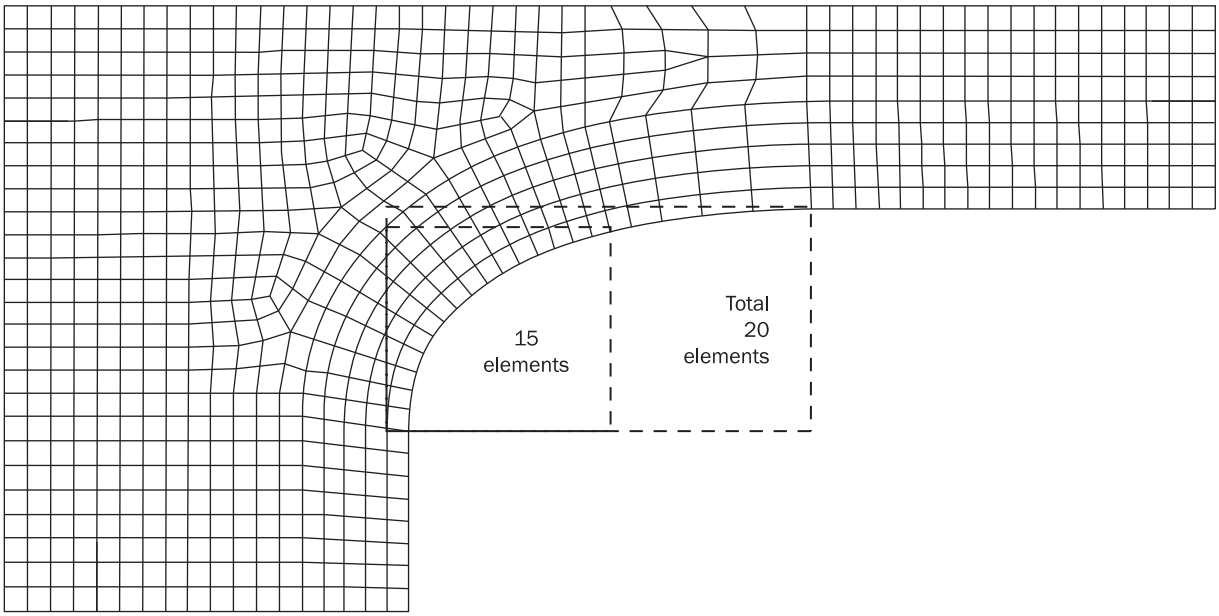

3 HOT SPOT STRESS FOR DETAILS DIFFERENT FROM WEB-STIFFENED CRUCIFORM JOINTS

3.1 Welded details

3.1.1

For hot spot type '*a*', the structural hot spot stress, σ_{HS}, is calculated from a finite element analysis with t_{n50} × t_{n50} mesh density and is obtained by the following formula:

$$\sigma_{HS} = 1.12 \cdot \sigma$$

where:

σ : Surface principal stress, in N/mm^2, read out at a distance $t_{n50}/2$ away from the intersection line.

t_{n50} : Plate net thickness, in mm, in way of the weld toe.

At structural details where the hot spot type '*a*' is classified as a web-stiffened cruciform joint, the stress read out procedure of [4.2] is to be applied.

For hot spot type '*b*', the stress distribution is not dependent on the plate thickness; the structural hot spot stress, σ_{HS}, is derived from a finite element analysis with mesh density 10×10 mm and is obtained by the following formula:

$$\sigma_{HS} = 1.12 \cdot \sigma$$

where:

σ : Surface principal stress, in N/mm^2, read out at an absolute distance from the intersection line of 5 mm.

3.1.2 Stress read out methods

Depending on the element type, one of the following stress read out method is to be used:

- With 4-node shell element:

  Element surface stress components at the centre points are linearly extrapolated to the line A-A as shown in Figure 15 to determine the stress components for load case '*i1*' and '*i2*' at the stress read out point located at a distance $t_{n50}/2$ from the intersection line for type 'a' hot spot. Two principal hot spot stress ranges are determined at the stress read out point from the stress components tensor differences (between load case '*i1*' and '*i2*') calculated from each side (side L, side R) of line A-A. The angle θ between the direction x of the element co-ordinate system and the principal direction *pX* of the principal hot spot stress range co-ordinate system has to be determined.

- With 8-node shell element:

  With a t_{n50} × t_{n50} element mesh using 8-node element type, the element mid-side node is located on the line A-A at a distance $t_{n50}/2$ for type '*a*' hot spots. This node coincides with the stress read out point. The element surface stress components for load case '*i1*' and '*i2*' can be used directly without extrapolation within each adjacent element located on each side (side L, side R) of the line A-A as illustrated in Figure 16. Two principal hot spot stress ranges are determined at the stress read out point from the stress components tensor difference (between load case '*i1*' and '*i2*') calculated from each side of line A-A. The angle θ between the direction x of the element coordinate system and the principal direction *pX* of the principal hot spot stress range coordinate system has to be determined.

For fatigue assessment of type '*b*' hot spots, a beam element is to be used to obtain the fatigue stress range. The stress range is to be based on axial and bending stress in the beam element. The beam element is to have the same depth as the connecting plate thickness while the in-plane width is negligible.

Figure 15 : Determination of stress read out points and hot spot stress for 4-node element

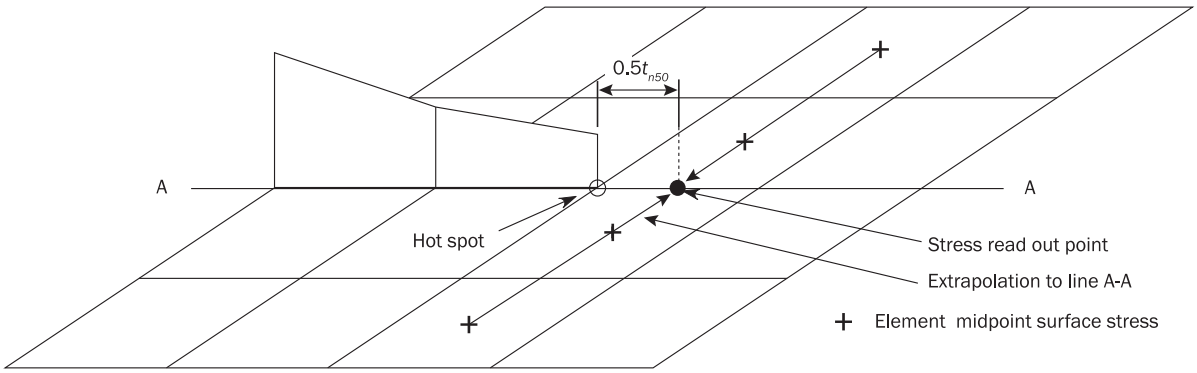

Figure 16 : Determination of stress read out points and hot spot stress for 8-node element

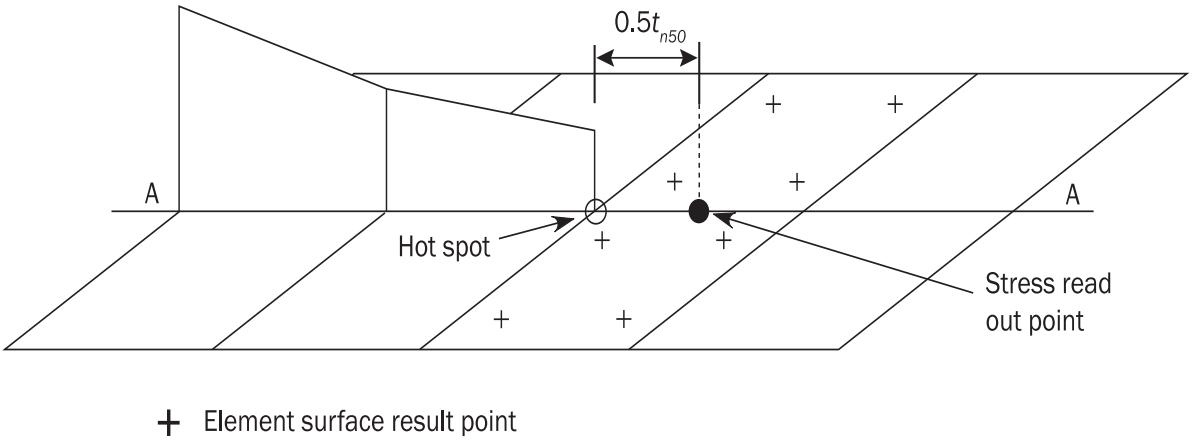

3.1.3

The above read out procedure is based on element surface stresses. Generally, in FE software the element stresses are calculated at the Gaussian integration points located inside the element. Depending on the element type implemented in the FE software, it may be necessary to perform several interpolations in order to determine the actual stress at the considered stress read out point at the surface of the element mid-point or element edge.

3.2 Base material

3.2.1

For fatigue assessment at a free plate edge, a beam element is to be used to obtain the fatigue stress range. The beam element is to have the same depth as the connecting plate thickness while the in-plane width should be negligible.

3.3 Bent hopper knuckle

3.3.1

The hot spot stress at the inner bottom/hopper sloping plate in transverse and longitudinal directions (i.e. hot spots 1, 2 and 3 defined in Ch 9, Sec 2, Table 5) of a bent hopper knuckle is to be taken as the surface principal stress read out from a point shifted away from the intersection line between the considered member and abutting member by the weld leg length.

The hot spot stress, in N/mm^2, is obtained by the following formula:

$$\sigma_{HS} = \sigma_{shift}$$

where:

σ_{shift} : Surface principal stress, in N/mm^2, at the shifted read out position as defined in [4.2.1] and taken as:

$$\sigma_{shift} = \sigma_{membrane}(x_{shift}) + \sigma_{bending}(x_{shift})$$

$\sigma_{bending}(x_{shift})$: Bending stress, in N/mm^2, at x_{shift} position.

$\sigma_{membrane}(x_{shift})$: Membrane stress at x_{shift} position, in N/mm^2.

3.3.2

The procedure for calculation of hot spot stress at flange such as inner bottom /hopper sloping plate is the same that for web-stiffened cruciform joints as described in [4.2.1]. The procedure that applies for hot spots on the ballast tank side of the inner bottom/hopper plate in way of a bent hopper knuckle is in principle the same as that applied on the cargo tank side of the inner bottom plate for welded knuckle in Figure 18 and Figure 19. The intersection line is taken at the mid-thickness of the joint assuming median alignment. The plate angle correction factor and the reduction of bending stress as applied for a web-stiffened cruciform joint in [4.2.2] are not to be applied for the bent hopper knuckle type.

3.3.3

The stress at hot spots located in way of the web such as transverse web and side girder (i.e. hot spots 4, 5 and 6 defined in Ch 9, Sec 2, Table 5) at a bent hopper knuckle type is to be derived as described for web-stiffened cruciform joints in [4.3.1].

4 HOT SPOT STRESS FOR WEB-STIFFENED CRUCIFORM JOINT

4.1 Applicability

4.1.1

Among the structural details to be assessed listed in Ch 9, Sec 2, Table 3 the following structural details are considered as a web-stiffened cruciform joint:

a) Welded hopper knuckle connection, shown in Figure 17.

b) Heel of horizontal stringer, shown in Figure 17.

c) Lower stool – inner bottom connection.

Two kinds of hot spots relative to the web-stiffened cruciform joints are to be assessed:

- Hot spots at the flange of web-stiffened cruciform joint,
- Hot spots in way of the web of web-stiffened cruciform joint.

4.1.2

The procedure for calculating hot spot stress at flange of web-stiffened cruciform joint is given in [4.2].

4.1.3

The procedure for calculating hot spot stress in way of the web of the web-stiffened cruciform joint is given in [4.3].

Figure 17 : Web-stiffened cruciform joints

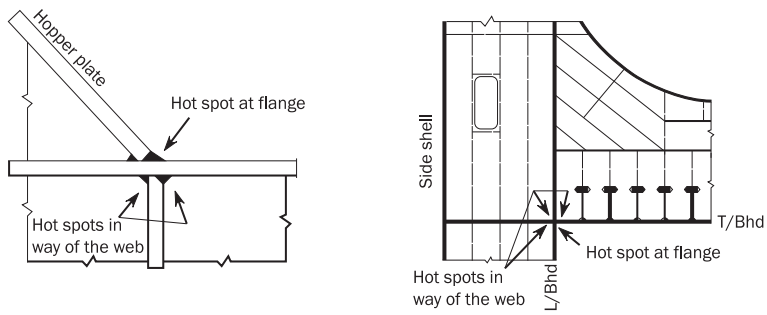

4.2 Calculation of hot spot stress at the flange

4.2.1

For hot spot at the flange of web-stiffened cruciform joints, the surface principal stress is to be read out from a point shifted away from the intersection line between the considered member and abutting member to the position of the actual weld toe and multiplied by 1.12. The intersection line is taken at the mid-thickness of the cruciform joint assuming a median alignment.

The hot spot stress, in N/mm^2, is to be obtained as:

$\sigma_{HS} = 1.12\ \sigma_{shift}$

where:

σ_{shift} : Surface principal stress, in N/mm^2, at shifted stress read out position.

The stress read out point shifted away from the intersection line is obtained as:

$$x_{shift} = \frac{t_{1-n50}}{2} + x_{wt}$$

where:

$t_{1\text{-}n50}$: Net plate thickness of the plate number 1, in mm, as shown in Figure 18

x_{wt} : Extended fillet weld leg length, in mm, as defined in Figure 18, not taken larger than $t_{1\text{-}n50}$.

4.2.2

The stress at the shifted position is derived according to the following formula and illustrated in Figure 19:

$$\sigma_{shift} = [\sigma_{membrane}\ (x_{shift}) + 0.60 \cdot \sigma_{bending}\ (x_{shift})] \cdot \beta$$

where:

$\sigma_{bending}\ (x_{shift})$:Bending stress, in N/mm^2, at the shifted position taken as:

$$\sigma_{bending}\ (x_{shift}) = \sigma_{surface}\ (x_{shift}) - \sigma_{membrane}\ (x_{shift})$$

$\sigma_{surface}(x_{shift})$: Total surface stress at x_{shift} position (including membrane stress and bending stress), in N/mm^2.

$\sigma_{membrane}(x_{shift})$: Membrane stress at x_{shift} position, in N/mm^2.

β : Plate angle hot spot stress correction factor, taken as:

- For $\alpha = 135°$:

$$\beta = 0.96 - 0.13\ \frac{x_{wt}}{t_{1-n50}} + 0.20\left(\frac{x_{wt}}{t_{1-n50}}\right)^2$$

- For $\alpha = 120°$:

$$\beta = 0.97 - 0.14\ \frac{x_{wt}}{t_{1-n50}} + 0.32\left(\frac{x_{wt}}{t_{1-n50}}\right)^2$$

- For $\alpha = 90°$:

$$\beta = 0.96 + 0.031\frac{x_{wt}}{t_{1-n50}} + 0.24\left(\frac{x_{wt}}{t_{1-n50}}\right)^2$$

α : Angle, in deg, between the plates forming a web-stiffened cruciform joint as shown in Figure 19.

Correction factors for connections with plate angles intermediate to those given should be derived based on a linear interpolation of the above values. The calculated hot spot stress is to be used in conjunction with the hot spot S-N curve for weld toe connections according to Ch 9, Sec 3, [4.2].

Figure 18 : Geometrical parameters of web-stiffened cruciform connections

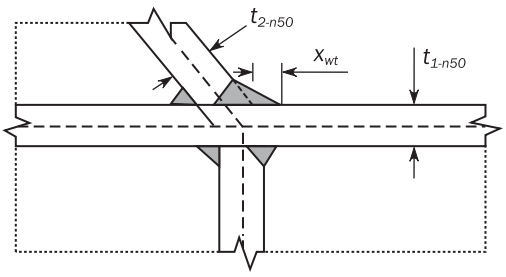

Figure 19 : Procedure for calculation of hot spot stress at web-stiffened cruciform connections

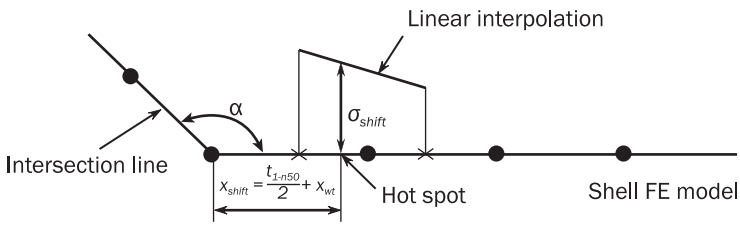

Figure 20 : Determination of stress read out points for web-stiffened cruciform connections

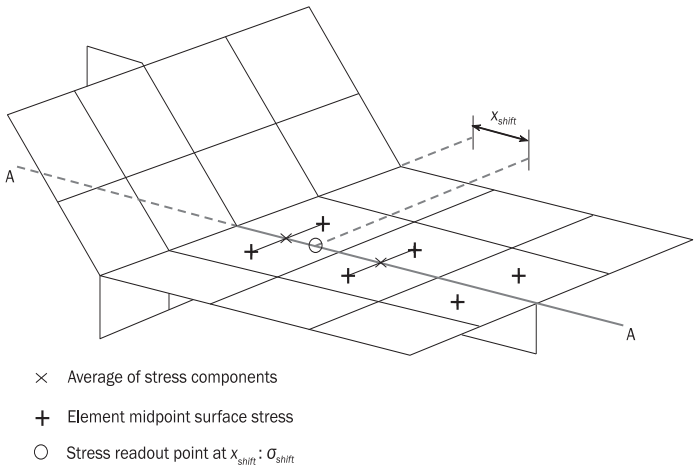

4.2.3

Surface principal stresses at the centre point of the two first elements on left and right side of the line A-A are averaged and taken as the surface principal stresses in way of the web position (line A-A). The surface principal stresses for load case '*i1*' and '*i2*' are linearly interpolated along the line A-A in order to determine hot spot principal stresses at the stress read out point located at the x_{shift} position as shown in Figure 20. The two principal hot spot stress ranges are determined at the stress read out point between load case '*i1*' and '*i2*'.

4.3 Calculation of hot spot stress in the web

4.3.1

Hot spots located in way of the web as indicated in Figure 21 are to be checked with the hot spot stress defined from the maximum principal surface stress at the intersection offset by the distance x_{shift} from the vertical and horizontal element intersection lines as illustrated in Figure 21. The intersection line is taken at the mid thickness of the cruciform joint assuming a median alignment. The hot spot stress, in N/mm^2, is to be obtained as:

$\sigma_{HS} = \sigma_{shift}$

where:

σ_{shift} : Maximum principal surface stress, in N/mm^2, at the intersection offset by the distance x_{shift}.

The stress read out point at the intersection offset is obtained as:

$$x_{shift} = \frac{t_{3-n50}}{2} + x_{wt}$$

where:

$t_{3\text{-}n50}$: Net plate thickness of the web, in mm, as shown in Figure 21

x_{wt} : Extended fillet weld leg length, in mm, , taken as:

$x_{wt} = \min(\ell_{leg1}, \ell_{leg2})$

ℓ_{leg1}, ℓ_{leg2}: Leg length, in mm, of the vertical and horizontal weld lines as shown in Figure 21.

.

Figure 21 : Hot spots in way of web

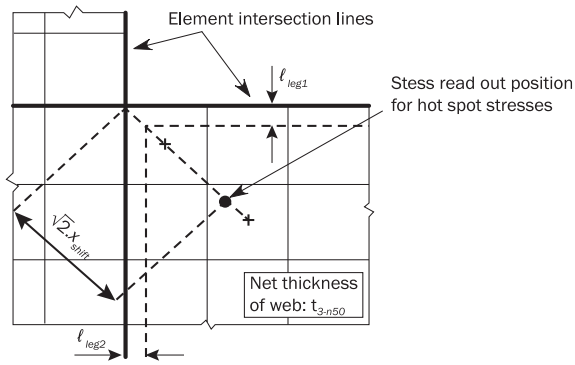

$x_{wt} = \min(\ell_{leg1}, \ell_{leg2})$

5 LIMITATIONS OF HOT SPOT STRESS APPROACH

5.1 Scope of application of hot spot stress approach

5.1.1

The hot spot stress approach given in Ch 9, Sec 1, [2.3.1] is not applicable for simple cruciform joints and simple T-joints when the stress flow in direction I as shown in Figure 22 is considered. For stresses in the direction normal to the weld at hot spot location "c" (direction I) there is no stress flow into the transverse plating as it is represented only by one plane in the shell model. However, it attracts stresses for in-plane direction (direction II) at hot spot location "*a*".

In situations where a bracket is fitted behind the transverse plate as shown in Figure 1, acting with stiffness in the direction normal to the transverse plate, stresses flow also into the transverse plate and the hot spot methodology is considered applicable.

5.1.2

The hot spot stress at position '*c*' for simple cruciform joints and simple T-joints is to be determined by the stress read out procedure given in [3.1] multiplied by a geometrical stress concentration factor of 1.3 and is taken as:

$\sigma_{HS} = 1.3 \cdot 1.12\sigma$

Figure 22 : Illustration of check points in way of a welded attachment under orthogonal applied in plane loads

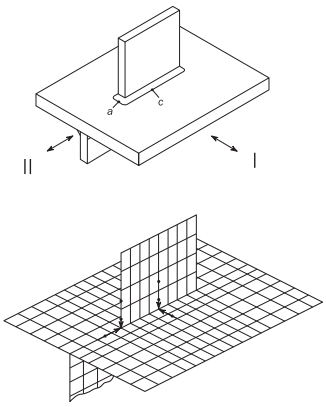

6 SCREENING FATIGUE ASSESSMENT

6.1 Screening procedure

6.1.1 Assumptions

The screening fatigue procedure is based on:

- Screening hot spot stress obtained by multiplying the stresses calculated from fine mesh analysis according to Ch 7, Sec 3 by the stress magnification factor of the considered structural detail.
- Mean stress effect and thickness effect are used according to Ch 9, Sec 3, [3.2] and Ch 9, Sec 3, [3.3].

6.1.2 Procedure

The screening fatigue procedure includes the following three phases:

a) Phase 1: Calculation of fatigue stress.

- Stresses are calculated at the stress read out point from the fine mesh element analysis with elements size of 50 × 50 mm, according to Ch 7, Sec 3 for all fatigue load cases defined in Ch 9, Sec 1, [7], for all loading conditions. Stresses to be used are element average membrane components stress defined in [6.2.3].
- Hot- spot surface stress components are calculated for each load case '*i1*' and '*i2*' from the stresses multiplied by the stress magnification factor η, taken as:
  - $\sigma_{HS,\, i1(j)} = \eta\ \sigma_{S,\, i1(j)}$
  - $\sigma_{HS,\, i2(j)} = \eta\ \sigma_{S,\, i2(j)}$
- Hot spot principal surface stress ranges are the difference of hot spot stress components obtained for each load case '*i1*' and '*i2*'.
- Fatigue stress ranges for welded joints are determined from hot spot principal surface stress ranges with correction factor for mean stress and thickness effect.

where:

$\sigma_{S,\, i1(j)}$: Stress calculated from the fine mesh analysis in load case '*i1*' of loading condition (*j*) defined in [6.2].

$\sigma_{S,\, i2(j)}$: Stress calculated from the fine mesh analysis in load case '*i2*' of loading condition (*j*) defined in [6.2].

η : Stress magnification factor given in Table 2.

b) Phase 2: Selection of S-N curve.

The S-N curve D defined in Ch 9, Sec 3, [4] is to be used with the fatigue stress range of weld toe in screening fatigue procedure.

c) Phase 3: Calculation of fatigue damage and fatigue life according to [6.1.3].

Table 2 : Stress magnification factor

Ship type	Structural detail category		Bulk hold	Stress magnification factor
Oil tanker	Toe of stringer		–	2.45
	Bracket toe of transverse web frame		–	1.65
Bulk carrier	Lower hopper welded knuckle		FA (1)	2.28
			EA or C (1)	2.00
	Lower stool - Inner bottom	Non vertical (knuckle angle > 90°)	FA (1)	1.81
			EA or C (1)	1.47
		Vertical (knuckle angle = 90°)	FA (1)	2.09
			EA or C (1)	2.75
(1) FA and EA mean "full cargo hold in alternate loading condition" and "empty cargo hold in alternate loading condition" respectively, C means “cargo hold of BC-B and BC-C bulk carriers”.				

6.1.3 Screening fatigue criteria

The total fatigue damage and the fatigue life of screened details are to comply with the criteria given in Ch 9, Sec 3, [2].

Structural details that do not comply with the acceptance criteria are to be checked with respect to fatigue strength using a very fine mesh finite element analysis as described in Ch 9, Sec 5.

6.2 Stress read out procedure

6.2.1 Bracket toe

For bracket toe, the stress read out point is located at a 50 mm distance away from the bracket toe as shown in Figure 23.

Figure 23 : Stress read out point at bracket toe

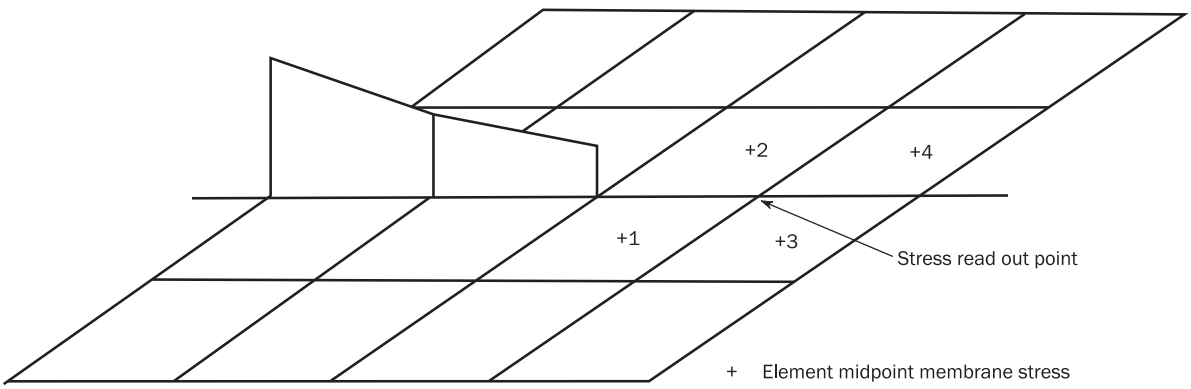

6.2.2 Knuckle detail

For the lower hopper knuckle and for the connection between transverse bulkhead lower stool and inner bottom, the stress read out point is located at a 50 mm distance away from the knuckle line (i.e. model intersection line) as shown in Figure 24.

Figure 24 : Stress read out point of knuckle detail

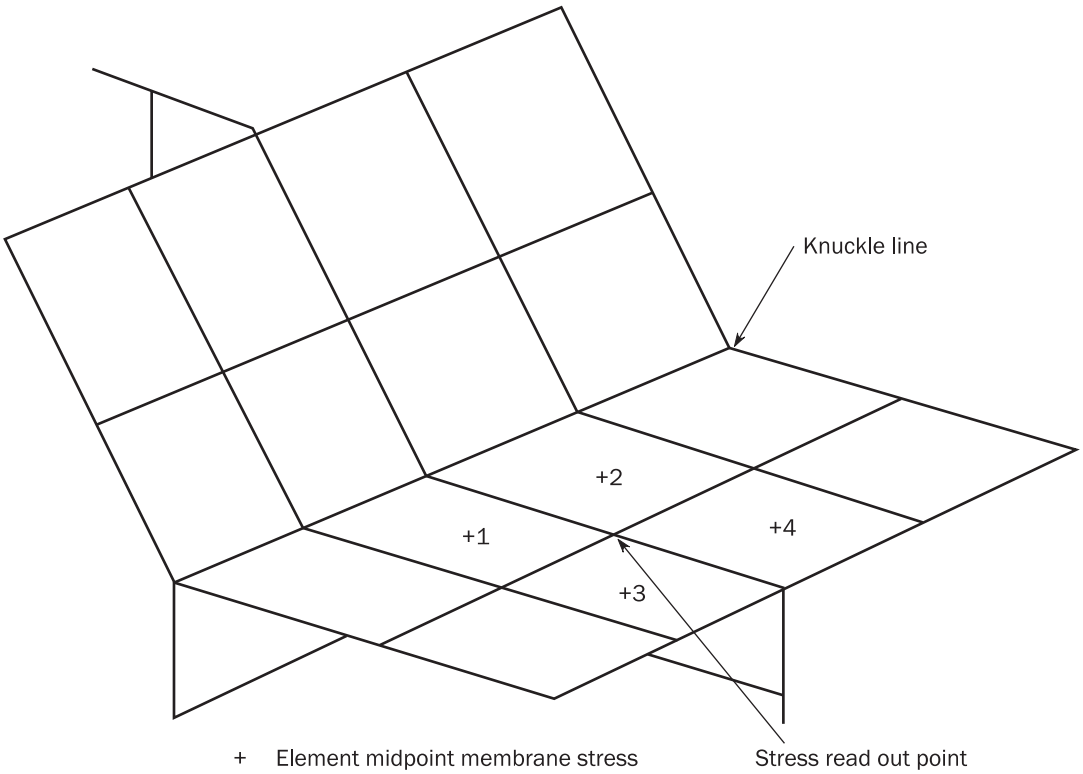

6.2.3 Read out point stress

The average of membrane stress components at the centre of four elements, modelled with elements size of 50 × 50 mm connected to the stress read out point (or node) can be used as read out point stress.

When the element size is less than 50 x 50 mm, the stress of read out point can be derived using elements in an equivalent area as shown in Figure 25.

Figure 25 : Equivalent area for element size less than 50 × 50 mm

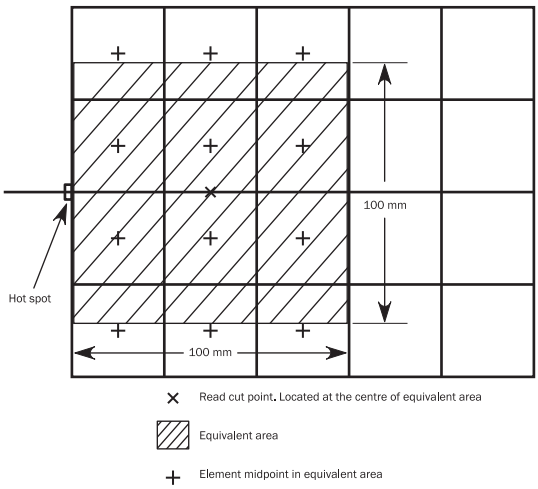

SECTION 6
DETAIL DESIGN STANDARD

SYMBOLS

For symbols not defined in this section, refer to Ch 1, Sec 4.

1 GENERAL

1.1 Purpose

1.1.1

Design standard provides fatigue resistant detail design at an early stage in the structural design process by giving consideration to the following aspects:

- Application of fatigue design principles.
- Construction tolerances and other practical considerations.
- In-service experience and fatigue performance.

1.1.2

The design standard is to be applied to the design of ship structural details in following steps:

- Highlighting potential critical areas within the ship structure.
- Identification of the fatigue hot spot locations for each of the critical structural details.
- Provision of a set of alternative improved configurations from which a suitable solution can be selected.
- Requirements on geometrical configurations, scantlings, welding requirements and construction tolerances.
- Post fabrication method of improving fatigue life, such as weld toe grinding.

1.2 Application

1.2.1

The structural details described in this section are to be designed according to the given design standard but alternative detail design configurations may be accepted subject to demonstration of satisfactory fatigue performance.

For the details given in Ch 9, Sec 2, Table 3, the fatigue assessment by very fine mesh finite element analysis may be omitted if the detail is designed in accordance with the design standard given in this section.

2 STIFFENER-FRAME CONNECTIONS

2.1 Design standard A

2.1.1

Designs for cut outs in cases where web stiffeners are omitted or not connected to the longitudinals are required to adopt tight collar or the improved design standard "*A*" as shown in Table 1 or equivalent, for the following members:

- Side shell below $1.1T_{sc}$.
- Bottom.
- Inner hull longitudinal bulkhead below $1.1T_{sc}$.
- Topside tank sloping plating below $1.1T_{sc}$.
- Hopper.
- Inner bottom.

2.1.2

Designs that are different from those shown in Table 1 are acceptable subject to demonstration of satisfactory fatigue performance, e.g. by using comparative finite element analysis. The comparative FE analysis is to be performed following the modelling guidance given in Figure 1.

Figure 1 : Finite element model for verification of equivalent design

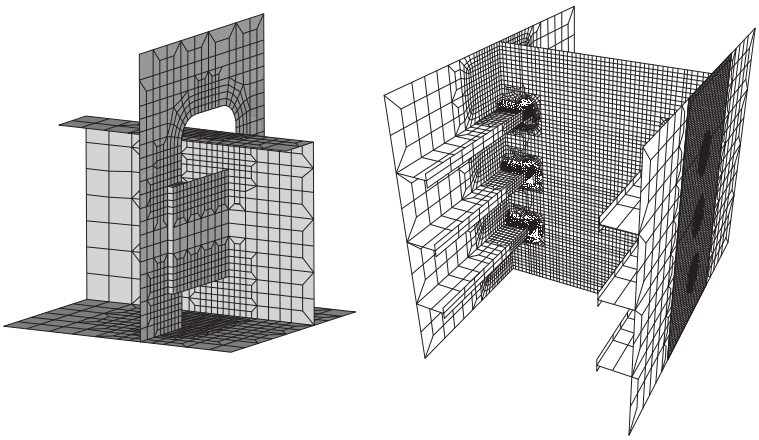

2.2 Equivalent design of stiffener-frame connections

2.2.1

If the required designs for stiffener-frame connections in [2.1] are not followed, the alternative design is to be verified to have equivalent fatigue strength to the design standard "A" or to be verified to have satisfactory fatigue performance. The alternative design is to be verified according to the procedure given in [2.2.2] to [2.2.5] and documentation of results is to be submitted to the Society.

2.2.2

The procedure of [2.2.3] and [2.2.4] is provided to verify the alternative design to have equivalent fatigue strength with respect to any position in the transverse ring, i.e. double bottom and double side. The hot spot stress of the alternative design and that of the required design is to be compared to the critical hot spots in way of the cut-out. The critical hot spots depend on the detail design and are to be selected in agreement with the Society. The hot spot stress is to be derived according to Ch 9, Sec 5, [3.1] and Ch 9, Sec 5, [3.2]. It is to be noted that welded hot spots at the free edge are classified as hot spot type "*b*". Example of typical hot spots for checking is shown in Ch 9, Sec 2, [2].

Table 1 : Design standard A – stiffener-frame connection

Cut outs for longitudinals in transverse webs where web stiffeners are omitted or not connected to the longitudinal flange	
Design standard *A*	
1	2
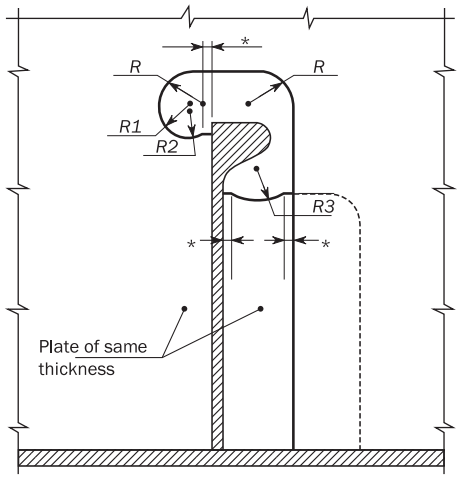	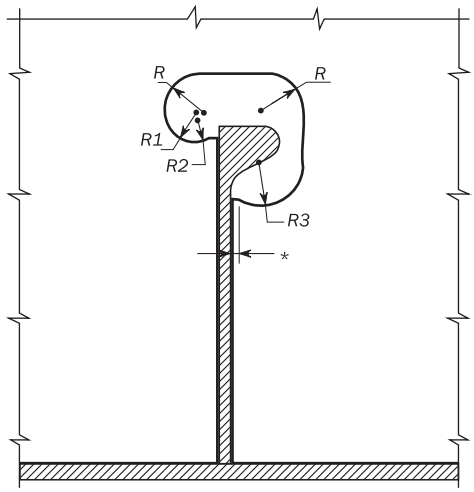
3	4
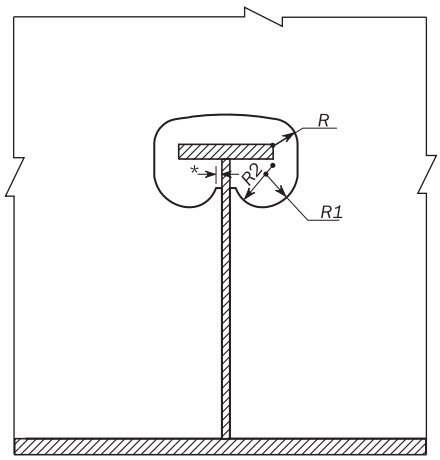	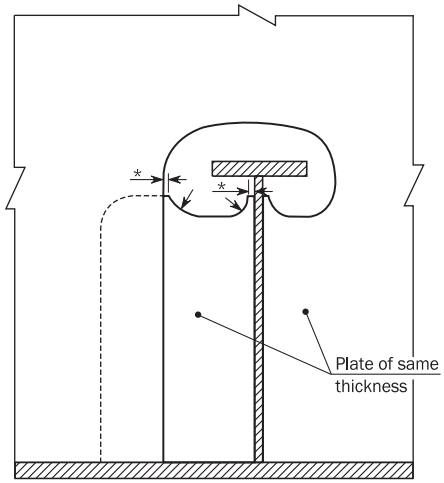
Note 1: Soft toes marked '*' are to be dimensioned to suit the weld leg length such that smooth transition from the weld to the curved part can be achieved. Maximum 15 mm or thickness of transverse web/collar plates/lug plates whichever is the greater. Note 2: Configurations 1 and 4 indicate acceptable lapped lug plate connections.	
Critical location	Locations around cut-out with high stress concentration and locations in way of weld terminations.
Detail design standard	Improved slot shape to avoid high stress concentrations in transverse webs due to shear loads and local pressure loads transmitted via welded joints.
Building tolerances	Ensure alignment of all connecting members and accurate dimensional control of cut-outs according to IACS Recommendation No. 47.
Welding requirements	A wraparound weld, free of undercut or notches, around the transverse web connection to longitudinal stiffener web.

2.2.3

The very fine mesh finite element models are made to analyse the behaviour in way of double side or double bottom. The models should have an extent of 3 stiffeners in cross section, i.e. 4 stiffener spacings, and the longitudinal extent is to be one half frame spacing in both forward and aft direction. A typical model is shown in Figure 1. No cut-outs for access openings are to be included in the models. Connection between the lug or the web-frame to the longitudinal stiffener web, connections of the lug to the web-frame and free edges on lugs and cut-outs in web-frame are to be modelled with elements of net plate thickness size ($t_{n50} \times t_{n50}$). The mesh with net plate thickness size should extend at least five elements in all directions. Outside this area, the mesh size may gradually be increased in accordance with the requirements in Ch 9, Sec 5, [2]. The eccentricity of the lapped lug plates is to be included in the model. Transverse web and lug plates are to be connected by eccentricity elements (transverse plate elements). The height of eccentricity element is to be the distance between mid-layers of transverse web and lug plates having a thickness equal to 2 times the net thickness of web-frame plate $t_{w\text{-}n50}$. Eccentricity elements representing fillet welds are shown in Figure 2.

Figure 2 : Modelling of eccentric lug plate by shell elements

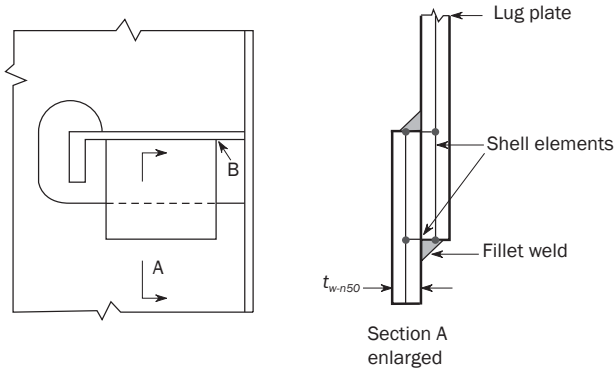

2.2.4

Three load cases are to be applied to the models of the design standard and alternative designs:

- External pressure of unit value, fixed boundary conditions at top and bottom of model.
- Shear stress by prescribed unit displacement at the model top and fixed boundary conditions at the model bottom.
- Axial load by prescribed unit displacement at the model top and fixed boundary conditions at the model bottom.

The forward and aft part of the model should have symmetry condition describing the behaviour in a double hull structure. Load application and boundary conditions are provided in Figure 3.

2.2.5

The alternative design may also be verified to have satisfactory fatigue performance using sub-modelling technique where a very fine mesh model of the alternative design located at the actual position of the stiffener-frame connection is analysed. The alternative design is considered acceptable if the fatigue acceptance criterion of Ch 9, Sec 1 is achieved. The fatigue acceptance criterion is checked by applying the methodology described in Ch 9, Sec 1, Ch 9, Sec 3 and Ch 9, Sec 5. The alternative design is considered acceptable only for the particular position where it is analysed.

Figure 3 : Load application and boundary conditions – FE model for verification of alternative design

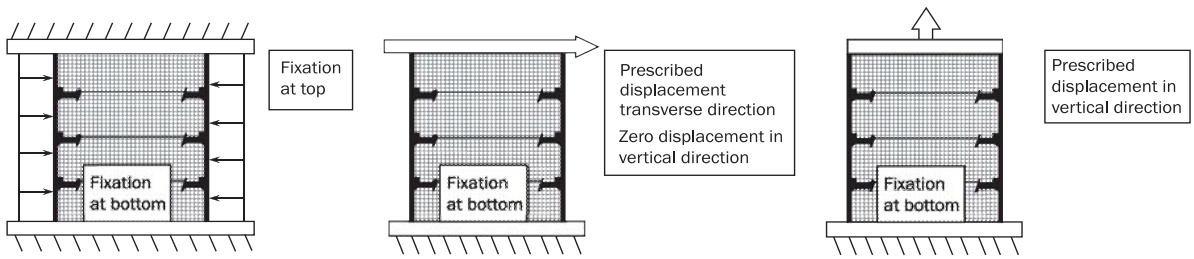

3 SCALLOPS IN WAY OF BLOCK JOINTS

3.1 Design standard B

3.1.1

Scallops in way of block joints in the cargo tank/hold region, located on the stiffeners fitted on strength deck, and side above 0.9 *D* from the baseline, are required to be designed according to the design standard B as shown in Table 2.

4 HOPPER KNUCKLE CONNECTION

4.1 Design standard C to H

4.1.1

The welded knuckle between hopper plating and inner bottom plating for double-hull oil tankers is to be designed according to the design standard C in Table 3. The design standard D in Table 4 may be used as an alternative to increase fatigue strength at the hopper connection.

4.1.2

The welded knuckle between hopper plating and inner bottom plating for bulk carriers is to be designed according to the design standard E in Table 5.

4.1.3

The radiused knuckle between hopper plating and inner bottom plating is to be designed according to the design standard F in Table 6 for double hull oil tankers.

Alternative structural arrangements may be accepted based on verification in accordance with Ch 9, Sec 5, [3.3].

4.1.4

The radiused knuckle between hopper plating and inner bottom plating for bulk carriers is to be designed according to the design standard G in Table 7.

4.1.5

The radiused knuckle between hopper plating and inner side plating for oil tankers and double side bulk carriers is to be designed according to the design standard H in Table 8.

4.1.6

In general, the prescribed minimum requirements for welding, weld dressing and building tolerances as given in Table 3 to Table 8 are to be followed. Alternative positioning and/or dispensation of some support structure, such as transverse and longitudinal brackets may be accepted subject to demonstration of acceptable fatigue lives. Inserts and/or weld dressing additional to those prescribed may be required as a consequence of hot spot fatigue analysis.

Table 2 : Design standard B – scallops in way of block joints

Welding of deck stiffeners in way of block joints	
Critical areas	**Design standard B**
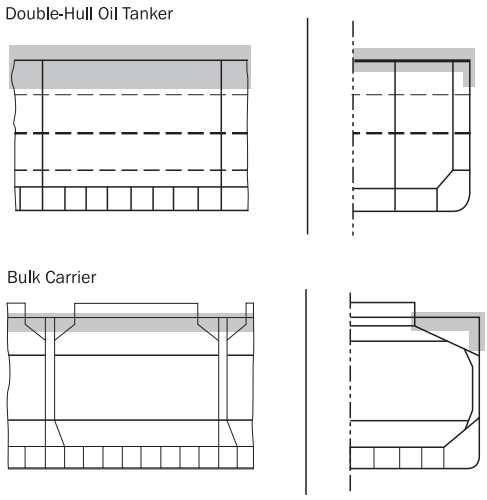	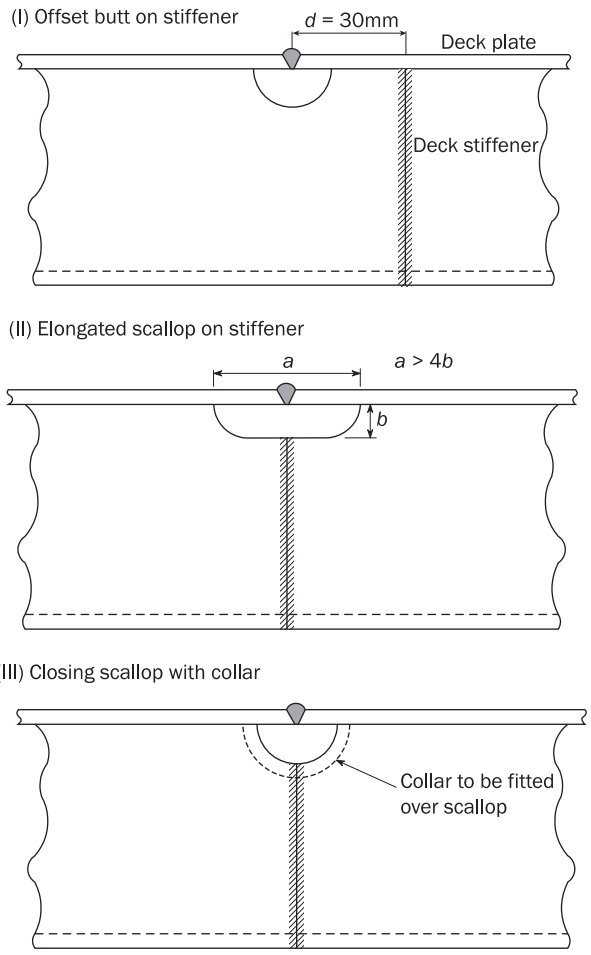
Critical locations	
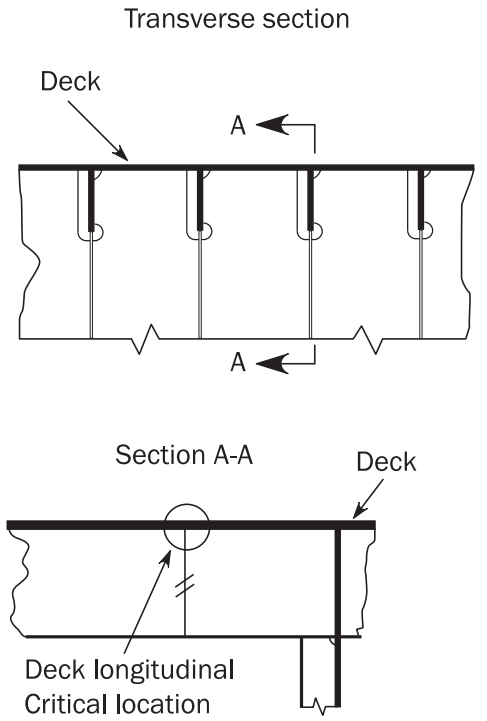	Note 1: Alternative scallop geometry to that shown in option II may be accepted subject to demonstration of satisfactory fatigue life based on hull girder loads taking into account additional stress concentration factor in way of weld

Critical location	Welding of deck stiffeners in way of block joints in cargo tank region, the strength deck and side above 0.9 *D* from the baseline.
Detail design standard	All scallops are to be fitted according to detail design standard B.
Building tolerances	Ensure alignment of all structural members according to IACS Recommendation No. 47.
Welding requirements	Full penetration butt weld, free of undercut or notches, around the web and flange of the longitudinal stiffener at block joints, particularly in way of the weld termination at the scallop for option II.

Table 3 : Design standard C – hopper knuckle connection detail, welded, without bracket, double hull oil tanker

Connections of floors in double bottom tanks to hopper tanks Hopper corner connections employing welded inner bottom and hopper sloping plating	
Critical areas	**Design standard C**
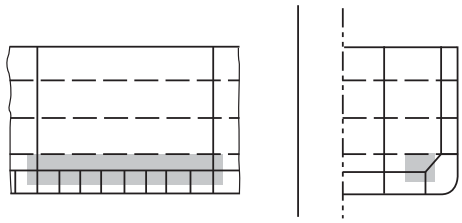	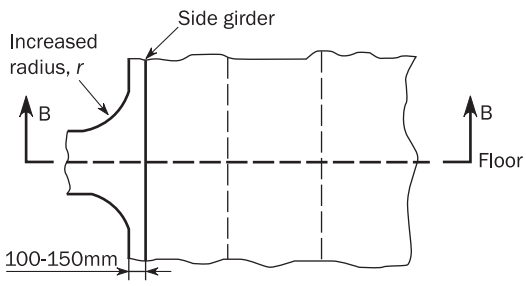
Critical locations	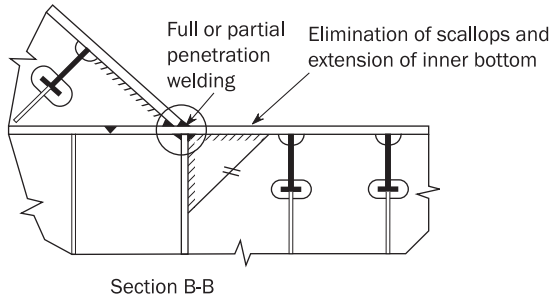
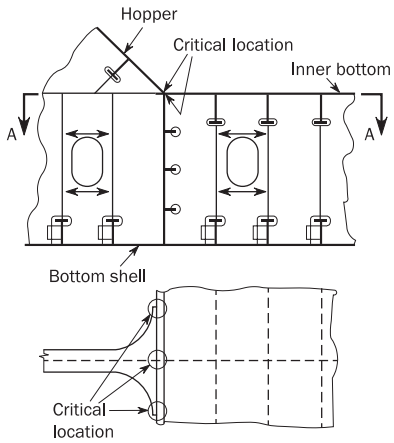	

Minimum requirement	As a minimum, detail design standard C or D is to be fitted. The ground surface is to be protected by a stripe coat of suitable paint composition, where the lower hopper knuckle region of cargo tanks is not coated.
Critical location	Hopper sloping plating connections to inner bottom plating in way of floors. Floor connections to inner bottom plating and side girder in way of hopper corners.
Detail design standard	Elimination of scallops in way of hopper corners, extension of inner bottom plating to reduce level of resultant stresses arising from cyclic external hydrodynamic pressure, cargo inertia pressure and hull girder loads. Scarfing bracket thickness is to be close to that of the inner bottom in way of the knuckle.
Building tolerances	Median line of hopper sloping plate is to be in line with the median line of the girder with an allowable tolerance of $t_{as\text{-}built}/3$ or 5 mm, whichever is less, where $t_{as\text{-}built}$ is the as-built side girder thickness. The allowable tolerance is to be measured parallel to the inner bottom.
Welding requirements	Full or partial penetration welding is to be applied to hopper sloping plating and inner bottom plating connection. Partial penetration welding is to be applied to connections of side girder to inner bottom plating, to connections of floors to inner bottom plating and to side girder, to connections of hopper transverse webs to sloping plating, to inner bottom and to side girder in way of the hopper knuckle. Definition of full and partial penetration welding and their required extent are given in Ch 12, Sec 3 Weld between hopper plating and inner bottom plating to be enlarged and ground smooth. Visible undercuts are to be removed, see Ch 9, Sec 3, [6]. Weld enlargement and grinding are applicable to minimum 200 mm on each side of the floor.

Table 4 : Design standard D – hopper knuckle connection detail, welded, with bracket, double hull oil tanker

Connections of floors in double bottom tanks to hopper tanks Hopper corner connections employing welded inner bottom and hopper sloping plating	
Critical areas	**Design standard D**
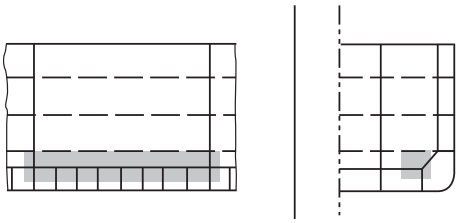	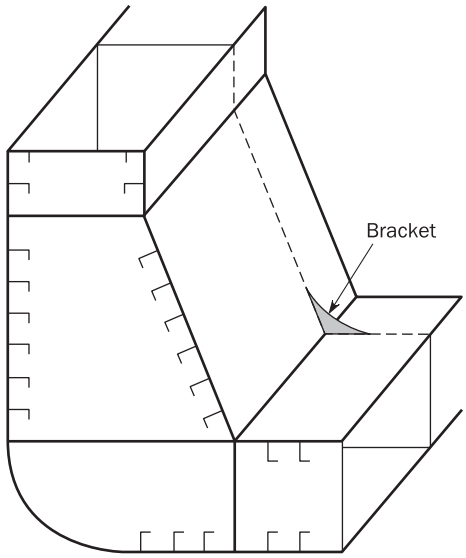 Note 1: Bracket to be fitted inside cargo tank. Note 2: Bracket to extend approximately to the first longitudinal. Note 3: The bracket toes are to have a soft nose design. Note 4: Bracket material to be same as that of inner bottom. Note 5: Slenderness of bracket to be in accordance with Ch 8, Sec 2, [5.2].
Critical locations	
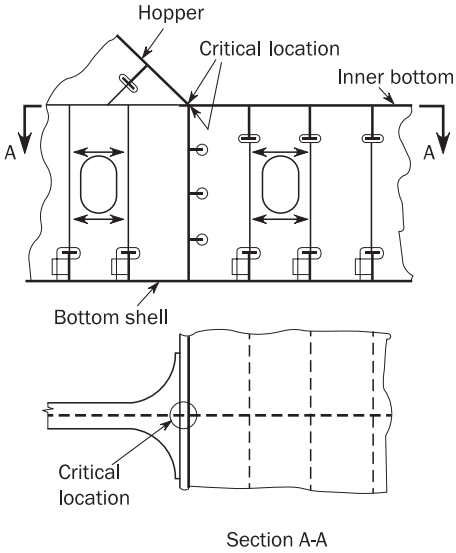	

Minimum requirement	As a minimum, detail design standard C or D is to be applied.
Critical location	Hopper sloping plating connections to inner bottom plating in way of floors. Floor connections to inner bottom plating and side girder in way of hopper corners. The bracket connection to inner bottom and hopper sloping plate.
Detail design standard	Elimination of scallops in way of hopper corners, extension of inner bottom plating to reduce level of resultant stresses arising from cyclic external hydrodynamic pressure, cargo inertia pressure and hull girder loads. Scarfing bracket thickness similar to that of the inner bottom in way of the knuckle.
Building tolerances	Median line of hopper sloping plate is to be in line with the median line of girder with an allowable tolerance of $t_{as\text{-}built}$ /3 or 5 mm, whichever is less, where $t_{as\text{-}built}$ is the as-built side girder thickness.
Welding requirements	Partial penetration welding is to be applied to hopper sloping plating and inner bottom plating connection, to connections of side girder to inner bottom plating, to connections of floors to inner bottom plating and to side girder, to connections of hopper transverse webs to sloping plating, to inner bottom and to side girder in way of the hopper knuckle. Partial penetration welding is to be applied to the bracket connections to inner bottom and hopper sloping plate, full penetration welding is to be applied at bracket toes. Definition of full and partial penetration welding and their required extent are given in Ch 12, Sec 3.

Table 5 : Design standard E – hopper knuckle connection detail, welded, bulk carrier

Connections of floors in double bottom tanks to hopper tanks Welded knuckle connection of hopper tank sloping plating to inner bottom plating	
Critical areas	**Design standard E**
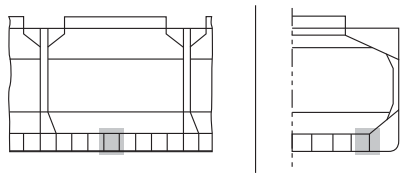	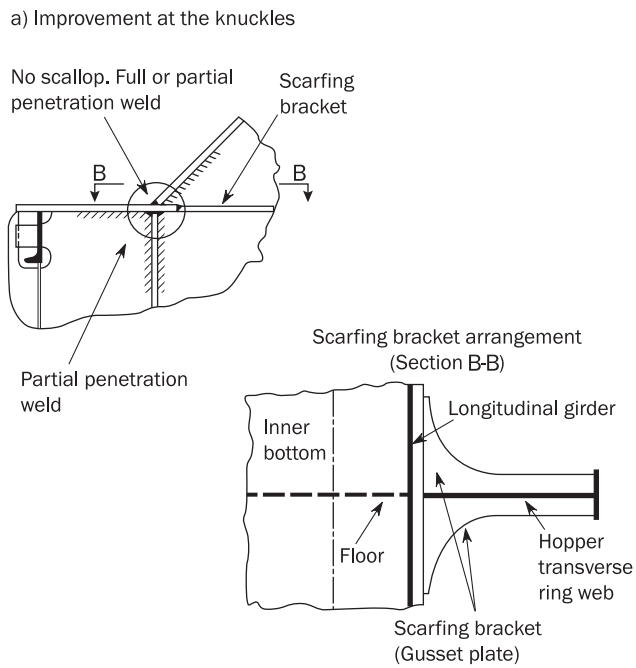
Critical locations	
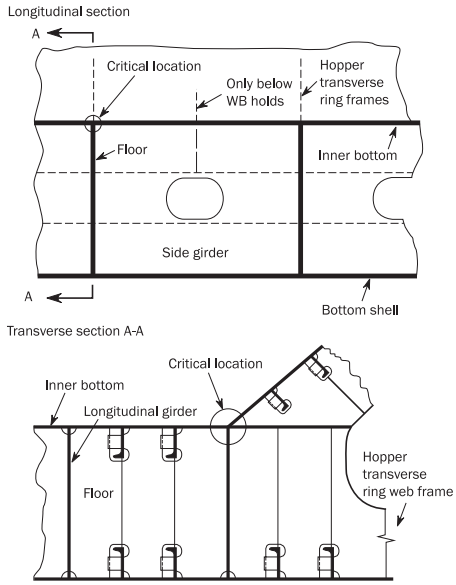	

Minimum requirement	As a minimum, detail design standard E is to be fitted. Ballast holds: No scallops or close scallops with collars; scarfing bracket; intermediate bracket if floor spacing greater than 2.5 m. Dry holds: No scallop or close scallops with collars and scarfing bracket.
Critical location	Hopper sloping plating connections to inner bottom plating in way of the floors. Floor connections to inner bottom plating and side girder in way of the hopper knuckle.
Detail design standard	Elimination of scallops in way of hopper knuckle, extension of inner bottom plating to reduce level of resultant stresses arising from cyclic external hydrodynamic pressure, cargo inertia pressure and hull girder loads. Scarfing bracket net thickness is to be minimum 80% of that of the inner bottom in way of knuckle and steel material to be of the same yield strength.
Building tolerances	Median line of hopper sloping plate is to be in line with the median line of girder with an allowable tolerance of $t_{as\text{-}built}/3$ or 5 mm, whichever is less, where $t_{as\text{-}built}$ is the as-built side girder thickness.
Welding requirements	Full or partial penetration welding is to be applied to hopper sloping plating and inner bottom plating connection for the length of the cargo hold. Partial penetration welding is to be applied to connections of side girder to inner bottom plating, to connections of floors to inner bottom plating and to side girder, to connections of hopper transverse webs to sloping plating, to inner bottom and to side girder in way of the hopper knuckle. Weld between hopper plating and inner bottom plating is to be enlarged and ground smooth. Visible undercuts are to be removed. Weld enlargement and grinding are applicable to minimum 200 mm on each side of the floor. Definition of full and partial penetration welding and their required extent are given in Ch 12, Sec 3.

Table 6 : Design standard F – hopper knuckle connection detail, radiused type, for double hull oil tanker

Connections of floors in double bottom tanks to hopper tanks Hopper corner connections employing radiused knuckle between inner bottom and hopper sloping plating	
Critical areas	**Design standard F**
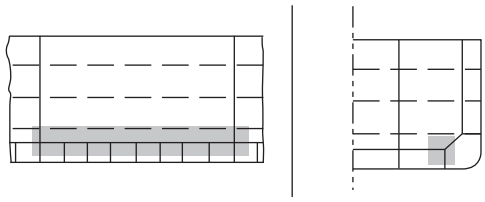	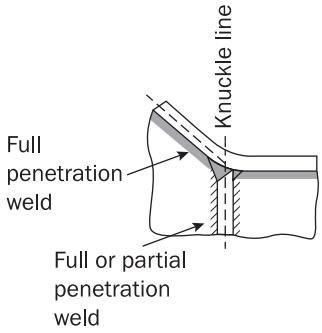
Critical locations	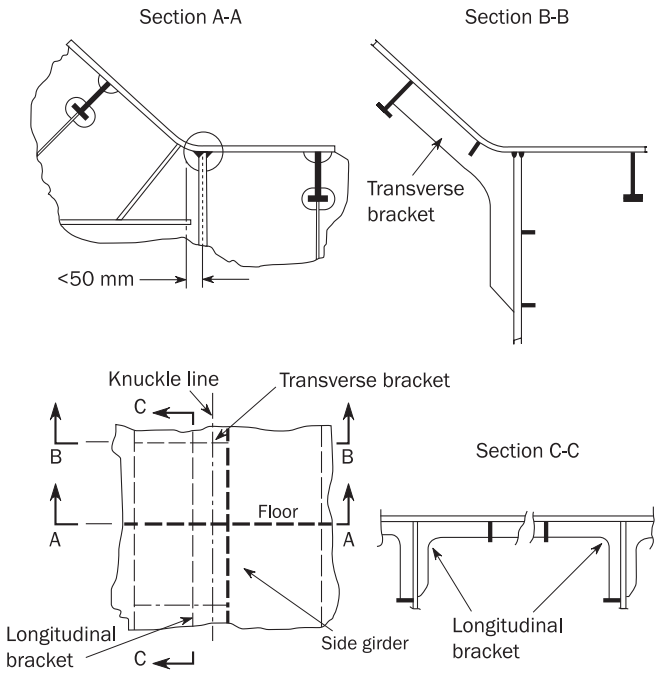
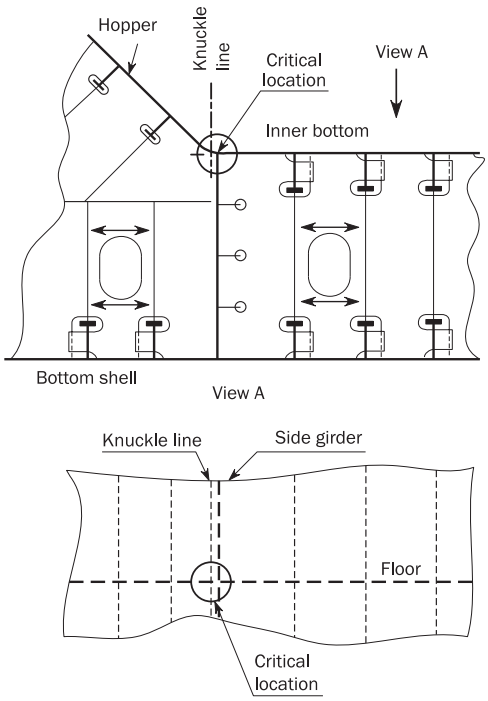	Note 1: Distance from side girder to centre of knuckle is to be as small as practicable, but is not to exceed 50 mm. Note 2: The knuckle radius is not to be less than 4.5 $t_{as\text{-}built}$ or 100 mm, whichever is the greater, where $t_{as\text{-}built}$ is the as-built thickness of the knuckle part. Note 3: Additional transverse brackets offset at a suitable distance on either side of transverse floor/hopper connection. Note 4: Additional longitudinal bracket on the side of sloping plate. Note 5: Longitudinal and/or transverse brackets may be omitted if it can be demonstrated that the girder provides sufficient support at the knuckle line, i.e. that fatigue requirements according to Ch 9, Sec 5 and local strength analysis requirements according to Ch 7, Sec 3 are fulfilled.
Critical location	Floor and hopper transverse web connections to inner bottom plating and hopper sloping plate, respectively and to side girder in way of hopper knuckle. Side girder connections to inner bottom plating in way of floors.

Connections of floors in double bottom tanks to hopper tanks Hopper corner connections employing radiused knuckle between inner bottom and hopper sloping plating	
Detail design standard	Elimination of scallops in way of hopper/girder connection and additional transverse and longitudinal brackets to reduce peak and range of resultant stresses arising from cyclic external hydrodynamic pressure, cargo inertia pressure, and hull girder global loading, and provide additional support to sloping plate.
Building tolerances	The nominal distance between the centres of thickness of the two abutting members (e.g. floor and hopper web plate) is not to exceed 1/3 of the as-built thickness of the side girder.
Welding requirements	Full penetration welding is to be applied to connections of floors to hopper/inner bottom plating in way of radiused hopper knuckle. Partial penetration welding is to be applied to connections of floors/hopper transverse webs to the side girder in way of hopper corner, and to connections of side girder to hopper/inner bottom plating. Definition of full and partial penetration welding and their required extent are given in Ch 12, Sec 3. In order to improve the fatigue strength, weld enlargement and grinding are applicable to full and partial penetration welds with a minimum distance of 300 mm from the intersection point between the radiused knuckle, the floor and the side girder.

Table 7 : Design standard G – hopper knuckle connection detail, radiused type, bulk carrier

Connections of floors in double bottom tanks to hopper tanks Hopper corner connections employing radiused knuckle between inner bottom and hopper sloping plating	
Critical areas	**Design standard G**
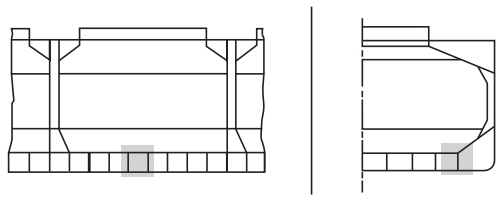	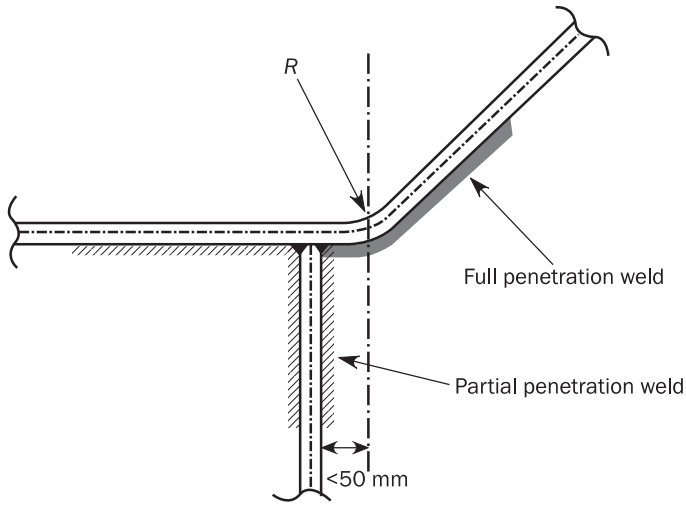
Critical locations	Intermediate bracket arrangement (Section B-B). Two intermediate brackets at both sides of floor/transverse web. 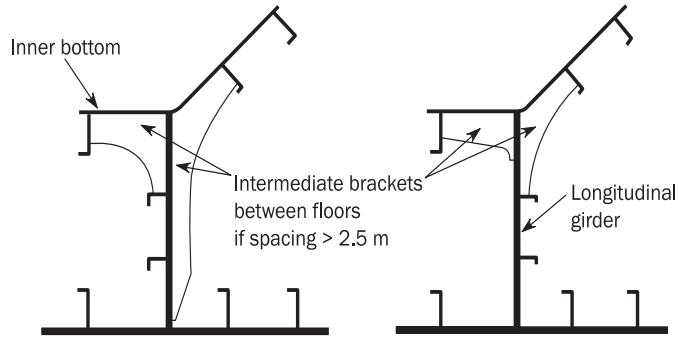
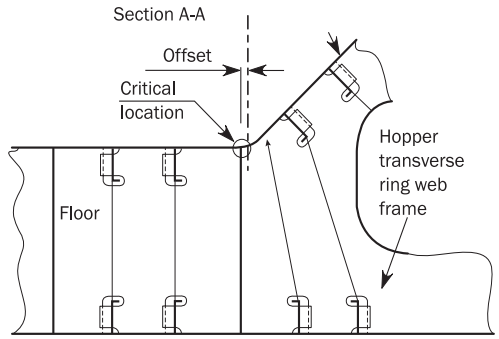 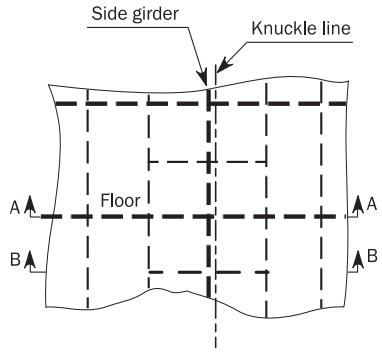	Note 1: Distance from side girder to centre of knuckle is to be as small as practicable, but is not to exceed 50 mm. Note 2: The knuckle radius is not to be less than 4.5 $t_{as\text{-}built}$ or 100 mm, whichever is the greater, in cases where $t_{as\text{-}built}$ is the as-built thickness of the knuckle part. Note 3: Additional transverse brackets on both side of transverse floor/hopper connection. Note 4: Transverse brackets may be omitted if it can be demonstrated that the girder provides sufficient support at the knuckle line, i.e. that fatigue requirements according to Ch 9, Sec 5 and local strength analysis requirements according to Ch 7, Sec 3 are fulfilled.

Critical location	Side girder connections to inner bottom plating in way of floors. Floor and hopper transverse web connections to inner bottom plating and hopper sloping plate, respectively, and to side girder in way of hopper corners.
Detail design standard	Elimination of scallops in way of hopper/girder connection. Ballast holds: Intermediate brackets fitted at approximately 0.5 floor space from floor/hopper web. Dry holds: Intermediate brackets fitted at 0.5 floor space from floor/hopper web if floor spacing is equal to or greater than 2.5 m.

Connections of floors in double bottom tanks to hopper tanks Hopper corner connections employing radiused knuckle between inner bottom and hopper sloping plating	
Building tolerances	The nominal distance between the centres of thickness of the two abutting members (e.g. floor and hopper web plate and additional supporting brackets) should not exceed 1/3 of the as-built thickness of the side girder.
Welding requirements	Full penetration welding is to be applied to connections of floors to hopper /inner bottom plating in way of radiused hopper knuckle. Partial penetration welding is to be applied to connections of floors/hopper transverse webs to side girder in way of hopper corners, to connections of side girder to hopper /inner bottom plating. Definition of full and partial penetration welding and their required extent are given in Ch 12, Sec 3.

Table 8 : Design standard H – upper hopper knuckle connection detail, radiused type, oil tankers and double side bulk carrier

Connections of transverse webs in double side tanks to hopper tanks

Hopper corner connections employing radiused knuckle between side longitudinal bulkhead and hopper sloping plating

Critical areas	Design standard H
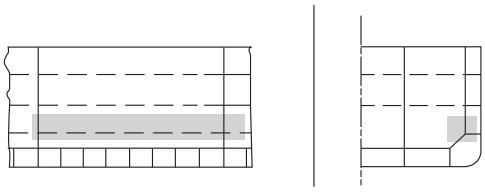	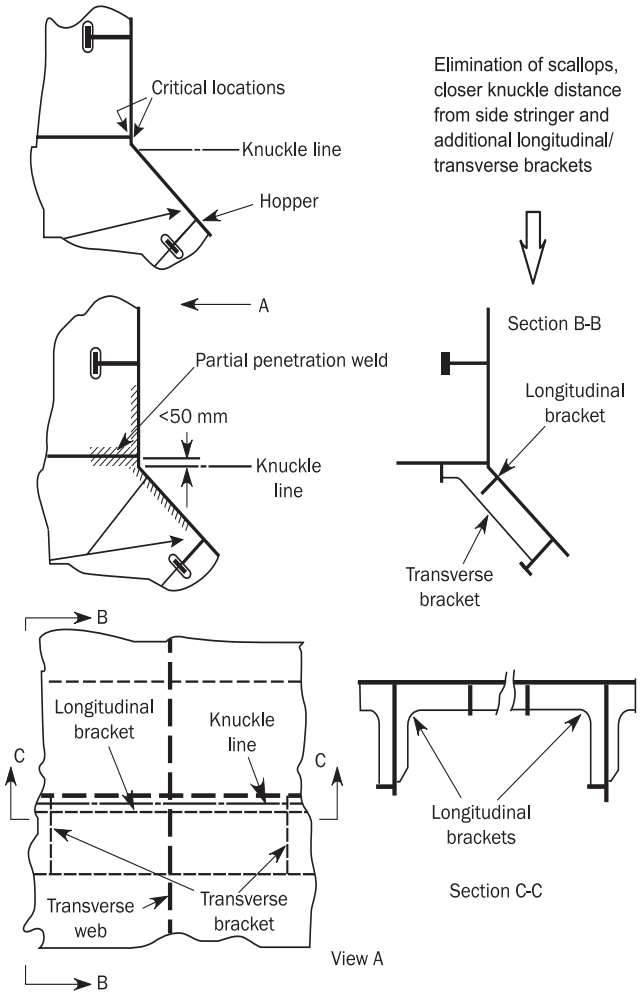
Critical locations	
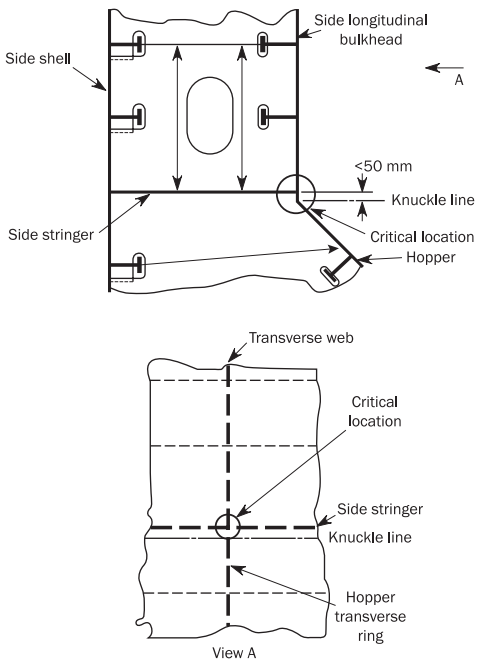	Note 1: Distance from side stringer to centre of knuckle is to be as small as practicable, but is not to exceed 50 mm. Note 2: The knuckle radius is not to be less than 4.5 $t_{as\text{-}built}$ or 100 mm, whichever is the greater, where $t_{as\text{-}built}$ is the as-built thickness of the knuckle part, according to Ch 12, Sec 1, [3] and Ch 12, Sec 1, [4]. Note 3: Additional transverse brackets offset at a suitable distance on either side of transverse floor/hopper connection. Note 4: Additional longitudinal bracket on the side of sloping plate. Note 5: Longitudinal and/or transverse brackets may be omitted if it can be demonstrated that the girder provides sufficient support at the knuckle line, i.e. that fatigue requirements according to Ch 9, Sec 5 and local strength analysis requirements according to Ch 7, Sec 3 are fulfilled.

Critical location	Side stringer connections to side longitudinal bulkhead in way of transverse webs. Double side tank transverse web and hopper transverse web connections to side longitudinal bulkhead and to side stringers in way of hopper corners.
Detail design standard	Elimination of scallops in way of hopper corners, closer knuckle distance from side stringers. Additional longitudinal/transverse brackets to reduce peak and range of resultant stresses arising from cyclic external hydrodynamic pressure and cargo inertia pressure.

Connections of transverse webs in double side tanks to hopper tanks Hopper corner connections employing radiused knuckle between side longitudinal bulkhead and hopper sloping plating	
Building tolerances	The nominal distance between the centres of thickness of the two abutting members should not exceed 1/3 of the as-built thickness of the side stringer.
Welding requirements	Partial penetration welding is applied to connection of side stringers to side longitudinal bulkhead, connection of double side tank transverse webs to side longitudinal bulkhead and to side stringers, connection of hopper transverse webs to sloped side longitudinal bulkhead and to side stringers in way of hopper corners. Small scallops of suitable shape, which are to be closed by welding after completion of the continuous welding of side stringers to longitudinal bulkhead, are to be provided where scallops are eliminated. Definition of full and partial penetration welding and their required extent are given in Ch 12, Sec 3.

5 HORIZONTAL STRINGER HEEL

5.1 Design standard I

5.1.1

The horizontal stringer heel location between transverse oil-tight/swash bulkhead plating and inner hull longitudinal bulkhead plating for double hull oil tankers are required to be designed according to design standard I, as shown in Table 9.

Table 9 : Design Standard I – transverse bulkhead horizontal stringer heel

Connections of horizontal stringer on plane oil-tight transverse bulkheads or wash bulkheads to inner hull longitudinal bulkheads	
Critical areas	**Design standard I**
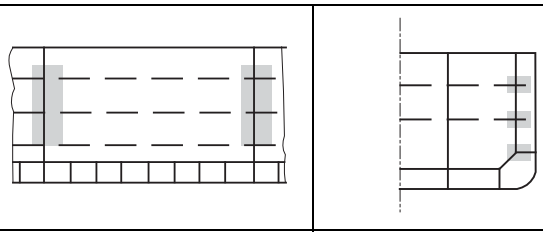	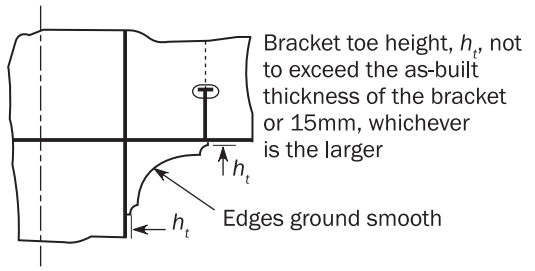 Note 1: Where a face plate is considered necessary, it is recommended that design features be adopted to reduce the stress concentration at the face plate termination (e.g. taper and soft nose). Adequate fatigue life of the weld on the bracket edge in way of such terminations is to be confirmed. Note 2: 'Slit type cut-outs are to be adopted in way of the bracket toe as shown. Alternatively, cut-outs with insert type collars will be accepted. Scallops are to be avoided.'
Critical locations	
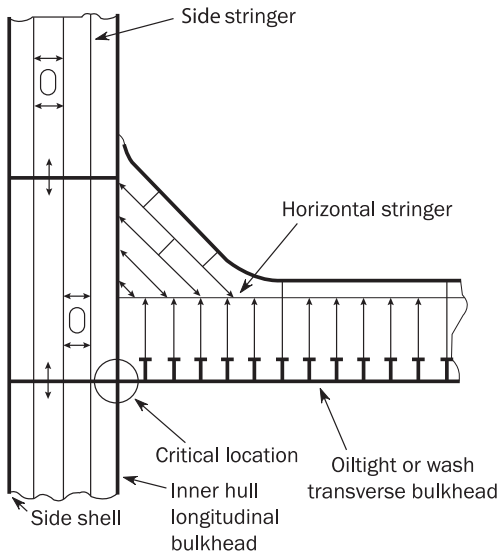	

Critical location	Intersections of webs of transverse bulkhead horizontal stringer and double side tank side stringer forming square corners.
Detail design standard	A soft toe backing bracket is to be fitted. The following bracket sizes are recommended: • VLCC: 800×800×30, *R*600 with soft toe as shown in figure above, • Other tankers: 800×600×25, *R*550 with soft toe as shown in figure above, where the longer arm length is in way of the inner skin. The specified minimum yield stress for the bracket is not to be less than 315 N/mm². The free edge is to be ground smooth with corners rounded.
Building tolerances	The nominal distance between the centres of thickness of the two abutting members should not exceed 1/3 of the as-built plate thickness of the inner hull longitudinal bulkhead.
Welding requirements	Vertical weld between the inner hull plating and transverse bulkhead plating, fillet welding having minimum weld factor 0.44. Welding between the backing bracket and the adjoining plates is to be double sided fillet welding having minimum weld factor 0.44 except in way of the bracket toes. Full penetration welding is to be used for the connection of bracket toes to the inner hull and transverse bulkhead plating for a distance of 200 mm from the toes and the weld toes are to be ground smooth in way.

6 BULKHEAD CONNECTION TO LOWER AND UPPER STOOL

6.1 Design standard J, K and L

6.1.1

The welded connection of bulkhead to lower stool of bulk carriers and oil tankers are to be designed according to the design standard J and K respectively, as shown in Table 10 and Table 11.

6.1.2

The welded connection of bulkhead to upper stool of bulk carriers are to be designed according to the design standard L, as shown in Table 12.

Table 10 : Design standard J – transverse bulkhead connection detail, bulk carrier (ballast hold)

Connections of transverse bulkhead with lower stool	
Critical areas	**Design standard J**
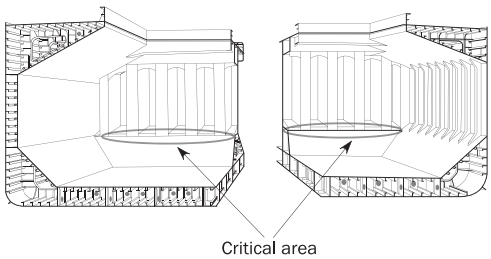	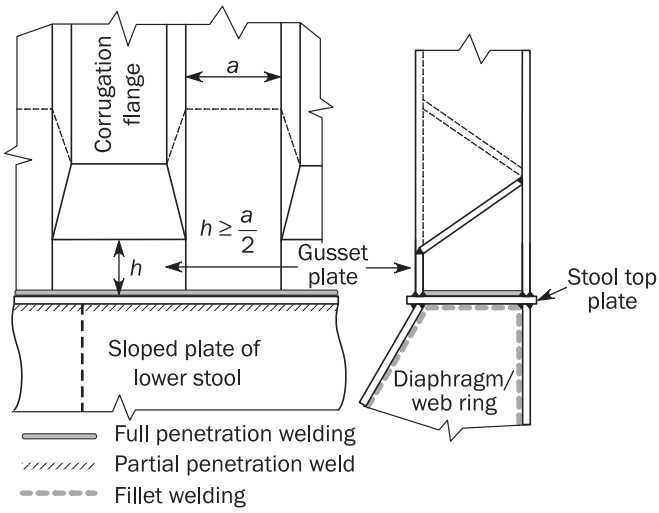
Critical locations	
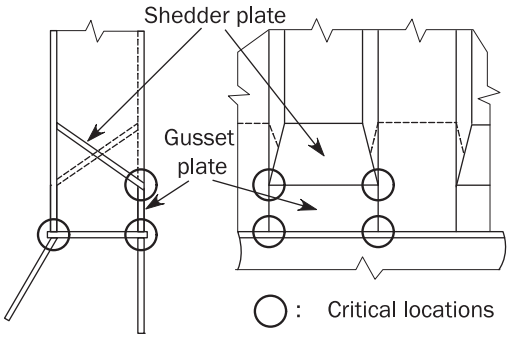	

Critical location	Connections of lower stool shelf plate to lower stool and corrugated transverse bulkheads. Connections of shedder plates to corrugated transverse bulkhead.
Detail design standard	The use of scallops is to be avoided on diaphragms/web at lower stool top plates. Gusset plates are to be fitted to corrugated bulkheads. Gusset plates are to be made out of the same material and have the same as-built thickness as corrugated bulkheads; and, the height of gusset plates is to be greater than half of breadth of the corrugation. To reduce stress concentrations at the crossing of the shedder plates one plate is to be moved higher than the other (as shown in Figure). Alternatively, bracketed stiffener can be fitted at the crossing points underneath the shedder plating facing the ballast hold.
Building tolerances	Ensure alignment between lower stool sloping plates and corrugation faces according to IACS Recommendation No. 47.
Welding requirement	Full penetration welding is to be applied between lower stool top plates and the side plating of lower stools and corrugated bulkheads. Partial or full penetration welding is to be applied around gusset plates. However, full penetration welding is to be applied between lower stool top plates and gusset plates. Ensure start and stop of welding is as far away as practicable from the critical corners.

Table 11 : Design standard K – transverse or longitudinal corrugated bulkhead connection detail, oil tanker

Connections of transverse or longitudinal bulkhead with lower stool - oil tanker	
Critical areas	**Design standard K**
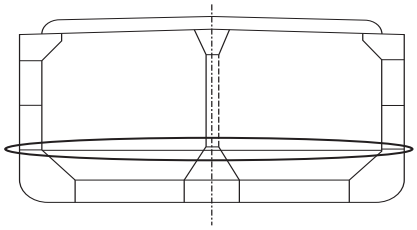	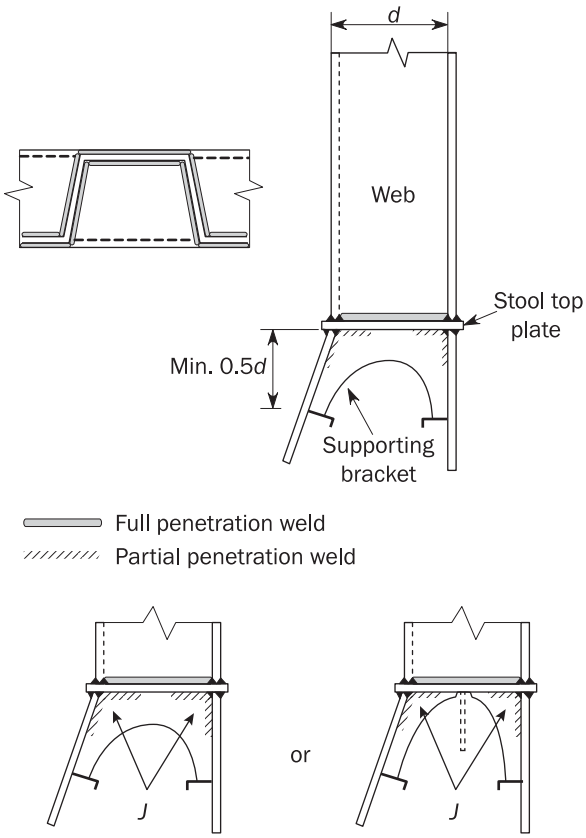
Critical locations	
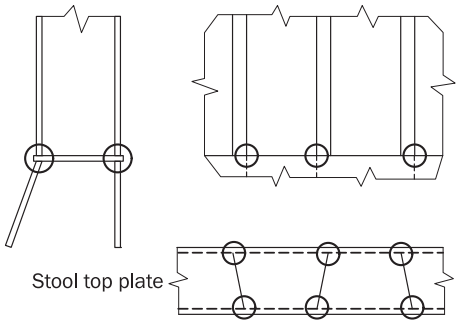	
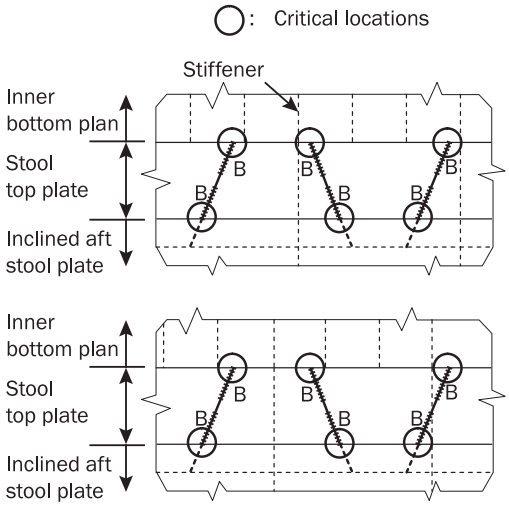	

Critical location	Connections of lower stool top plate to corrugated transverse or longitudinal bulkheads.
Detail design standard	The use of scallops is to be avoided on diaphragms/web at lower stool top plates. Supporting brackets are to be fitted in line with corrugation web as required in Ch 6, Sec 4, [2.6.2]. Scallop is not permitted in the supporting bracket.
Building tolerances	Ensure alignment between lower stool side plates and corrugation faces according to IACS Recommendation No. 47.

Connections of transverse or longitudinal bulkhead with lower stool - oil tanker	
Welding requirement	Full or partial penetration welding is to be applied between lower stool top plates and the side plating of lower stools. Full penetration welding is to be applied between lower stool top plates and vertical corrugated bulkheads. Full or partial penetration welding is to be applied between lower stool top plates and supporting brackets. Ensure start and stop of welding is as far away as practicable from the critical corners. Connection 'J', as shown in the figure, of in line supporting bracket to stool top plate and side plate of lower stool is to be full or partial penetration welding, on minimum 300 mm from the corner.

Table 12 : Design standard L – transverse bulkhead connection detail, bulk carrier (ballast hold)

Connections of transverse bulkhead with sloped plate of upper stool	
Critical areas	**Design standard L**
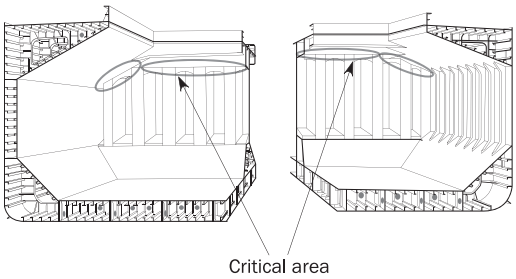	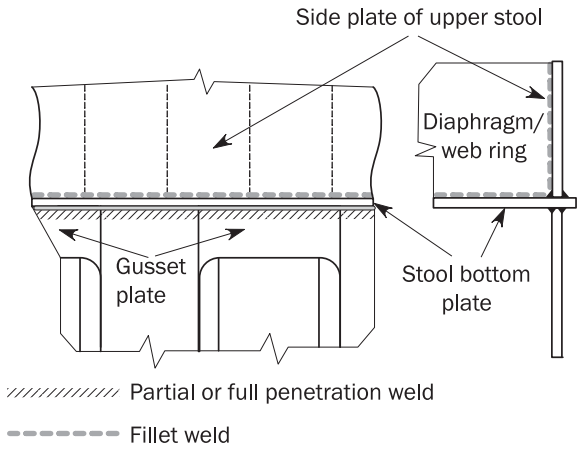
Critical locations	
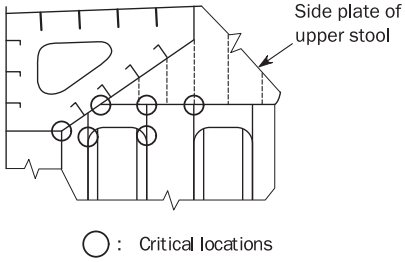	

Critical location	Connections of corrugated transverse bulkhead to the topside tank sloping plating and upper stool.
Detail design standard	The use of scallops is to be avoided on diaphragms/web at upper stool bottom plates. Gusset plates are to be fitted between the face plates of corrugated bulkheads in way of heavy ballast hold. In way of heavy ballast hold, a deep transverse web or well-stiffened backing stiffener is to be provided in the topside tank in line with the face plate of the bulkhead corrugations to ensure that the loads are effectively dissipated. Gusset plates are to have a thickness and material properties not less than those required for corrugation flanges.
Building tolerances	Ensure alignment between the face plates of corrugated bulkheads with the stool side plates as well as the watertight bulkheads and deep transverse web (or well-stiffened backing stiffener) in the topside tanks according to IACS Recommendation No. 47.
Welding requirement	• Partial or full penetration welding is to be applied between upper stool bottom plates and corrugation. • Fillet welding having minimum weld factor of 0.44 is to be applied between upper stool bottom plates and upper stool side plating. • Fillet welding having minimum weld factor of 0.44 is to be applied between upper stool bottom plates and diaphragms/web rings. Ensure start and stop of welding is as far away as practicable from the critical corners in all holds.

Table 13 : Design standard M – connection details for vertically corrugated bulkheads in cargo tanks and heavy ballast hold

Connections of vertically corrugated bulkhead to inner bottom/hopper plating without stool	
Critical areas	**Design standard M**
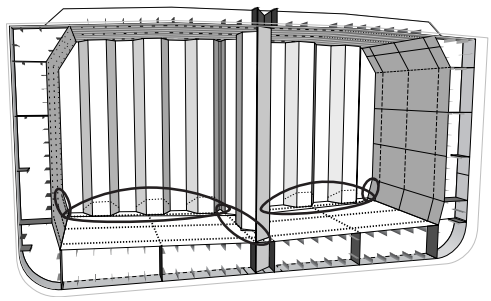	Detail of in line bracket: 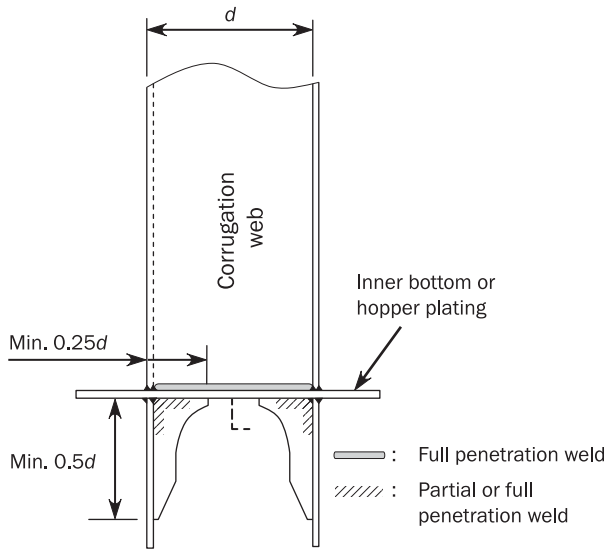 Note 1: Brackets are to be arranged below inner bottom and hopper tank plating in line with corrugation webs. Note 2: Where gusset plate with shedder plate according to Ch 6, Sec 4, [2.6.4] item b, is provided, in line bracket may be omitted on the side of gusset plate.
Critical locations	
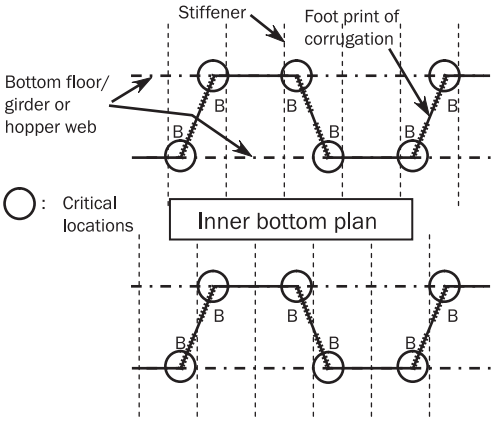	

Critical location	-
Material and scantling requirement	Inner bottom and hopper tank plating in way of corrugations is to be in accordance to Ch 6, Sec 4, [2.6.4]. Floors/girders and hopper web that support corrugation flange is to be in accordance to Ch 6, Sec 4, [2.6.4]. Supporting bracket aligned with corrugation web is to be in accordance with Ch 8, Sec 2, [5.2] and Ch 6, Sec 4, [2.6.4].
Detail design standard	Supporting brackets are to be fitted in line with corrugation web as required in Ch 6, Sec 4, [2.6.2]. Scallop is not permitted in the supporting bracket.
Building tolerances	Median line of corrugation is to be in line with the median line of the supporting members with an allowable tolerance of $t_{as\text{-}built}$ /3 or 5 mm, whichever is less, where $t_{as\text{-}built}$ is the inner bottom thickness.
Welding requirement	For the connection of vertically corrugated bulkheads to the inner bottom/hopper plating, full penetration welding is to be provided in according to Ch 12, Sec 3, [2.4] For the connection of supporting structures to inner bottom/hopper plating, partial or full penetration welding is to be provided in accordance with Ch 12, Sec 3, [2.4]. Partial or full penetration welding is also to be applied for the connection of in line brackets below corrugation web in accordance with Ch 12, Sec 3, [2.4] on minimum 300 mm from the corner.

7 BULKHEAD CONNECTION TO INNER BOTTOM

7.1 Design standard M

7.1.1

The connection of vertically corrugated bulkhead to inner bottom/hopper plating of cargo tanks and heavy ballast hold are to be designed according to the design standard M, as shown in Table 13.

8 LOWER AND UPPER TOE OF HOLD FRAME

8.1 Design standard N

8.1.1

The welded connections of lower and upper bracket toes of hold frame of bulk carriers are to be designed according to design standard N, as shown in Table 14

Table 14 : Design standard N – lower and upper toe detail of hold frame - bulk carrier

<table>
<tr><th colspan="2">Lower and upper hold frame connections</th></tr>
<tr><th>Critical areas</th><th>Design standard N</th></tr>
<tr><td> 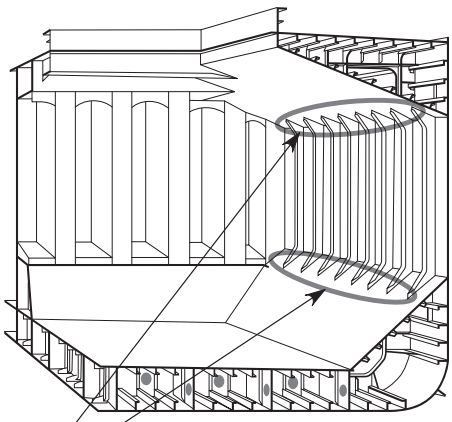
</td><td> 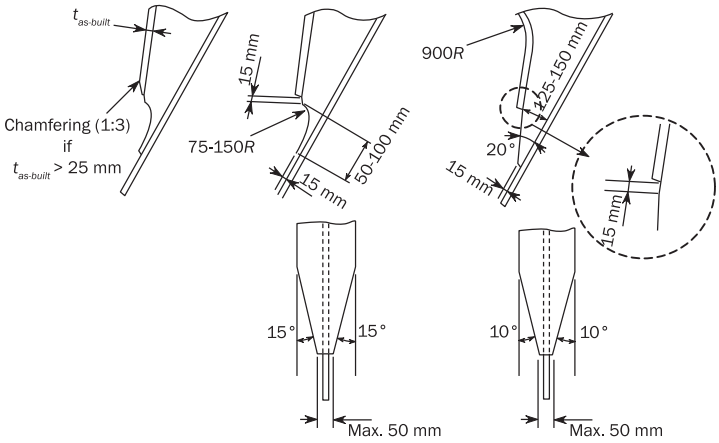

Examples of the soft and extended toes at the end of hold frames.</td></tr>
<tr><th>Critical locations</th><td rowspan="2"></td></tr>
<tr><td> 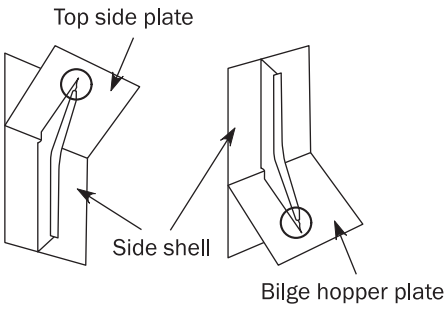

◯ : Critical location</td></tr>
<tr><td></td><td> 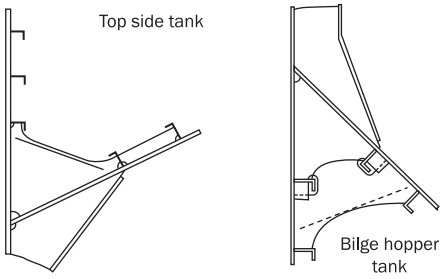

Connection of lower and upper end bracket of hold frame.</td></tr>
<tr><td>Minimum requirement</td><td colspan="2">As a minimum the detail design standard N is to be applied. Tapered extended toes are more effective and are to be considered for high tensile steel side shell frame.</td></tr>
</table>

Lower and upper hold frame connections	
Critical location	Toe connection of side shell frame lower and upper brackets to the hopper and topside sloping plates, including face plate terminations.
Detail design standard	Alternative geometries than stipulated above are permissible subject to demonstration of satisfactory fatigue performance. However, the maximum angles shown on the figures for thickness chamfering and face width tapering are not to be exceeded. Bracket toe height and the distance between the face plate termination and start of the toe radius (or toe taper) are to be kept to a minimum. The face plates of hold frames at lower or upper brackets are to be tapered and chamfered as shown. While chamfering may be dispensed with if the thickness of the face plates is less than 25 mm, it is nevertheless a recommended practice, with a larger gradient if necessary. Frames are to be built-up symmetrical sections with integral upper and lower brackets and are to be arranged with soft or elongated toes as shown. The side frame flange is to be curved (not knuckled) at the connection with the end brackets. Where the frame upper brackets are not positioned directly below a ring web, supporting brackets are to be provided. In the design ensure that if a topside tank stiffener is positioned above the end of frame upper bracket, the stiffener cut-out is avoided or closed with a full collar. Increasing the size of supporting brackets will reduce stress concentrations in the critical area. Where the frame lower brackets are not positioned directly above a ring web, supporting brackets are to be provided. In the design ensure that if a hopper tank stiffener is positioned below the end of the frame lower bracket, the stiffener cut-out is avoided or closed with a full collar. Increasing the size of supporting brackets will reduce stress concentrations in the critical area.
Building tolerances	Ensure alignment between side shell frame lower and upper bracket and transverse ring webs or supporting brackets according to IACS Recommendation No. 47. Maximum misalignment is to be not greater than $t_{as\text{-}built}/3$ where $t_{as\text{-}built}$ is the thinner as-built thickness of the webs to be aligned and misalignment is the overhang of the as-built thinner thickness.
Welding requirement	Welding is to comply with Ch 12, Sec 3, [3]. In way of the wrap around weld at the face plate termination, care should be taken to ensure no over- run onto the radius part and the toe is free from notches and undercut.

9 HATCH CORNER

9.1 Design standard O

9.1.1

Hatch corners in the cargo hold region, located on the strength deck of bulk carriers are required to be designed according to design standard O, as shown in Table 15.

Table 15 : Design standard O – hatch corner of bulk carriers

Hatch corner (bulk carriers)		
Design standard O		
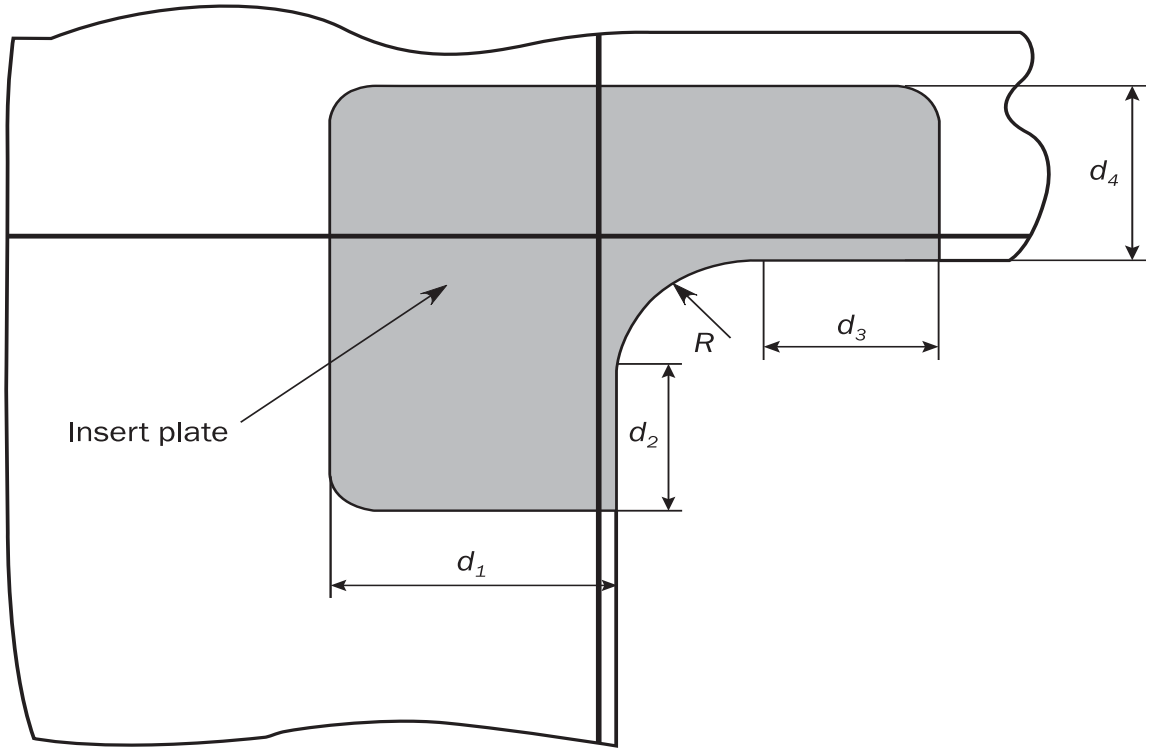		
	without insert plate	**with insert plate**
Critical location	Hatch corner curve	Curved Radius Transition insert plate to deck plating
Detail design standard	Shape of hatch corner as required by Pt 2, Ch 1, Sec 2	Radius and insert plate dimensions and thickness as required by Pt 2, Ch 1, Sec 2. Insert plate has to be tapered for smooth thickness transition to deck plating, the transition taper length has to be not less than 3 times the offset.
Post-treatment	Grinding of cut edge within the radius	Grinding of cut edge within the radius

PART 1 CHAPTER 10

OTHER STRUCTURES

Table of Contents

SECTION 1
Fore Part
1 General
2 Structural Arrangement
3 Structure Subjected to Impact Loads
4 Additional Scantling Requirements
SECTION 2
Machinery Space
1 General
2 Machinery Space Arrangement
3 Machinery Foundations
SECTION 3
Aft Part
1 General
2 Aft Peak
3 Stern Frames
4 Special Scantling Requirements for Shell Structure
SECTION 4
Tanks Subject to Sloshing
1 General
2 Scantling Requirements

SECTION 1
FORE PART

SYMBOLS

For symbols not defined in this section, refer to Ch 1, Sec 4.

α_p : Correction factor for the panel aspect ratio to be taken as:

$$\alpha_p = 1.2 - \frac{b}{2.1\,a}$$ but not to be taken as greater than 1.0.

f_{bdg} : Bending moment factor taken as:

$$f_{bdg} = 8\left(1 + \frac{n_s}{2}\right)$$

n_s : End fixation factor taken as:

n_s = 0 for both ends with low end fixity (simply supported).

n_s = 1 for one end fixed and one end simply supported.

n_s = 2 for continuous members or members with bracketed fitted at both ends

1 GENERAL

1.1 Application

1.1.1

The requirements of this section apply to the following structures of the fore part as defined in Ch 1, Sec 1, [2.4.2]:

- Fore peak structures.
- Stem.

In addition, the requirements of this section apply to structure subjected to impact loads:

- Flat bottom forward, according to [3.2].
- Bow area, according to [3.3].

2 STRUCTURAL ARRANGEMENT

2.1 Floors and bottom girders

2.1.1 Floors

In case of transverse framing, solid floors are to be fitted at each web frame location.

In case of longitudinal framing, the spacing of solid floors is not to be greater than 3.5 m or four transverse frame spaces, whichever is smaller.

The minimum depth of the floor at the centreline is not to be less than the required depth of the double bottom of the foremost cargo hold. See Ch 2, Sec 3, [2.3].

2.1.2 Bottom girders

A supporting structure is to be provided at the centreline either by extending the centreline girder to the stem or by providing a deep girder or centreline bulkhead.

Where a centreline girder is fitted, the minimum depth and thickness is not to be less than that required for the depth of the double bottom in the neighbouring cargo hold region, and the upper edge is to be stiffened.

In case of transverse framing, the spacing of bottom girders is not to exceed 2.5 m.

In case of longitudinal framing, the spacing of bottom girders is not to exceed 3.5 m.

2.1.3 Alternative design verification

This spacing, defined in [2.1.1] and [2.1.2] may be increased, if the designer performs a verification of the bottom structure by means of grillage analysis or FE analysis and provides their full documentation. The acceptance criteria to be applied are defined in Ch 6, Sec 6, [3]. A FE analysis is to be performed under consideration of the requirements provided in Ch 7.

2.2 Wash bulkheads

2.2.1

Where a centreline wash bulkhead is fitted, the lowest strake is to have thickness not less than required for a centreline girder.

Where a longitudinal wash bulkhead supports bottom transverses, the details and arrangements of openings in the bulkhead are to be configured to avoid areas of high stresses in way of the connection of the wash bulkhead with bottom transverses.

2.3 Side shell supporting structure

2.3.1 Web frames

The spacing of web frames, S, in m as defined in Ch 1, Sec 4, Table 5, is to be taken as:

$S = 2.6 + 0.005\,L$, but not to be taken greater than 3.5 m.

Perforated flats are to be fitted to limit the effective span of web frames to not greater than 10 m.

2.3.2 Stringers

The transverse framing forward of the collision bulkhead stringers are to be spaced approximately 3.5 m apart. Stringers are to have an effective span not greater than 10 m, and are to be adequately supported by web frame structures.

2.3.3 Alternative design verification

The spacing of web frames and stringers may be increased, if the designer performs a verification of the side shell supporting structure by means of beam analysis or FE analysis and provides their full documentation.

The acceptance criteria to be applied are defined in Ch 6, Sec 6, [3]. A FE analysis is to be performed under consideration of the requirements provided in Ch 7.

2.4 Tripping brackets

2.4.1

For side shell and tank walls, located forward of the collision bulkhead and vertically framed, tripping brackets spaced not more than 2.6 m are to be fitted, according to Figure 1, between primary supporting members, decks and/or platforms.

The as-built thickness of the tripping brackets is not to be less than the as-built thickness of the side frame webs to which they are connected.

Figure 1 : Tripping brackets

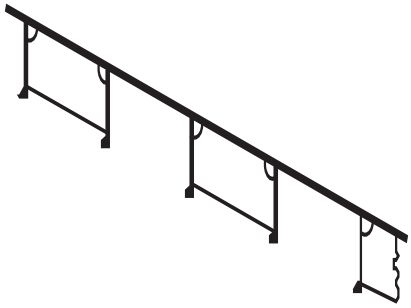

2.5 Bulbous bow

2.5.1 General

Where a bulbous bow is fitted, the structural arrangements are to be such that the bulb is adequately supported and integrated into the fore peak structure.

2.5.2 Diaphragm plates

At the forward end of the bulb the structure is generally to be supported by horizontal diaphragm plates spaced about 1m apart in conjunction with a deep centreline web.

In general, vertical transverse diaphragm plates are to be arranged in way of the transition from the peak framing to the bulb framing.

2.5.3 Special bulbous bow designs

In way of a wide bulb, additional strengthening in the form of a centreline wash bulkhead is generally to be fitted.

In way of a long bulb, additional strengthening in the form of transverse wash bulkheads or substantial web frames is to be fitted.

2.5.4 Strengthening for anchor and chain cable contact

The shell plating is to be increased in thickness at the forward end of the bulb and also in areas likely to be subjected to contact with anchors and chain cables during anchor handling. The increased plate thickness is to be the same as that required for plated stems given in [4.1.1].

3 STRUCTURE SUBJECTED TO IMPACT LOADS

3.1 General

3.1.1 Application

The requirements of this sub-section cover the strengthening requirements for local impact loads that may occur in the forward structure. The impact loads to be applied in [3.2] and [3.3] are described in Ch 4, Sec 5, [3].

3.1.2 General scantling requirements

The requirements of [3.2] and [3.3] are to be applied in addition to applicable scantling requirements in Ch 6. Local scantling increases due to impact loads are to be made with due consideration given to details and avoidance of hard spots, notches and other harmful stress concentrations.

3.2 Bottom slamming

3.2.1 Application

Where the minimum draughts forward, $T_{F\text{-}e}$ or $T_{F\text{-}f}$, as specified in Ch 4, Sec 5, [3.2.1], are less than 0.045 L, the bottom forward is to be additionally strengthened to resist bottom slamming pressures.

The draughts for which the bottom has been strengthened are to be indicated on the shell expansion plan and loading guidance information, as required in Ch 1, Sec 5.

The load calculation point of the primary supporting members is specified in Ch 3, Sec 7, [4].

3.2.2 Extent of strengthening

The strengthening is to extend forward of 0.3 L from the FP over the flat of bottom and adjacent plating with attached stiffeners up to a height of 500 mm above the baseline, see Figure 2.

Outside the region strengthened to resist bottom slamming the scantlings are to be tapered to maintain continuity of longitudinal and/or transverse strength.

Figure 2 : Extent of strengthening against bottom slamming

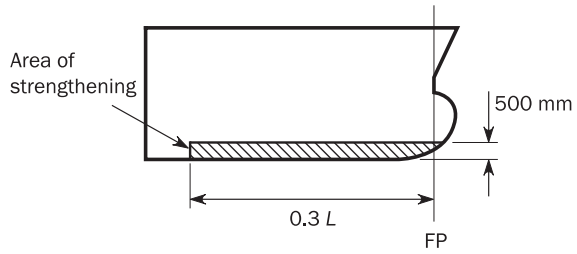

3.2.3 Design to resist bottom slamming loads

The design of end connections of stiffeners in the bottom slamming region is to provide end fixity, either by making the stiffeners continuous through supports or by providing end brackets complying with Ch 3, Sec 6, [3.2]. Where it is not practical to comply with this requirement, the net plastic section modulus, $Z_{pl\text{-}alt}$, in cm^3, for alternative end fixity arrangements is not to be less than:

$$Z_{pl-alt} = \frac{16 Z_{pl}}{f_{bdg}}$$

where:

Z_{pl} : Net plastic section modulus, in cm^3, as required by [3.2.5].

Scantlings and arrangements of primary supporting members, including bulkheads in way of stiffeners, are to comply with [3.2.7].

3.2.4 Shell plating

The net thickness of the hull envelope plating, t, in mm, except for the transversely stiffened bilge plating within the cylindrical part of the ship, is not to be less than:

$$t = \frac{0.0158 \alpha_p b}{C_d} \sqrt{\frac{P_{SL}}{C_a R_{eH}}}$$

where:

C_d : Plate capacity correction coefficient taken as:

C_d = 1.3.

C_a : Permissible bending stress coefficient taken as:

C_a = 1.0 for acceptance criteria set AC-I.

The transversely stiffened bilge plating within the cylindrical part of the ship is to comply with the requirements given in Ch 6, Sec 4, [2.2].

3.2.5 Shell stiffeners

The shell stiffeners within the strengthening area defined in [3.2.2] are to comply with the following criteria:

a) The net plastic section modulus, Z_{pl}, in cm^3, is not to be less than:

$$Z_{pl} = \frac{P_{SL}\ s\ \ell_{bdg}^{\ 2}}{f_{bdg}\ C_s\ R_{eH}}$$

where:

C_s : Permissible bending stress coefficient taken as:

C_s = 0.9 for acceptance criteria set AC-I.

b) The net web thickness, t_w, in mm, is not to be less than:

$$t_w = \frac{P_{SL}\ s\ell_{shr}}{2d_{shr}\ C_t\ \tau_{eH}}$$

where:

C_t : Permissible shear stress coefficient taken as:

C_t = 1.0 for acceptance criteria set AC-I.

c) The slenderness ratio is to comply with Ch 8, Sec 2.

3.2.6 Bottom slamming load area for primary supporting members

The scantlings of primary supporting members according to [3.2.7] are based on the application of the slamming pressure defined in Ch 4, Sec 5, [3.2] to an idealised slamming load area of hull envelope plating, A_{SL}, in m^2, given by:

$$A_{SL} = \frac{1.1\ L\ B\ C_b}{1000}$$

3.2.7 Primary supporting members

The size and number of openings in web plating of the floors and girders is to be minimised considering the required shear area as given in a):

a) Net shear area

The net shear area, $A_{shr\text{-}n50}$, in cm^2, of each primary supporting member web at any position along its span is not to be less than:

$$A_{shr-n50} = 10\frac{Q_{SL}}{C_t\ \tau_{eH}}$$

where:

Q_{SL} : The greatest shear force due to slamming for the position being considered, in kN, based on the application of a patch load, F_{SL} to the most onerous location, as determined in accordance with b) or c).

C_t : Permissible shear stress coefficient taken as:

C_t = 0.9 for acceptance criteria set AC-I.

b) Simplified calculation of slamming shear force

For simple arrangements of primary supporting members, where the grillage effect may be ignored, the shear force, Q_{SL}, in kN, is given by:

$$Q_{SL} = f_{pt}\, f_{dist}\, F_{SL}$$

where:

f_{pt} : Correction factor for the proportion of patch load acting on a single primary supporting member, taken as

$$f_{pt} = 0.5\,(f_{SL}{}^3 - 2\, f_{SL}{}^2 + 2)$$

f_{SL} : Patch load modification factor taken as:

$$f_{SL} = 0.5\,\frac{b_{SL}}{S}$$

f_{dist} : Factor for the greatest shear force distribution along the span, according to Figure 3.

F_{SL} : Patch load, in kN, taken as:

$$F_{SL} = P_{SL}\, \ell_{SL}\, b_{SL}$$

ℓ_{SL} : Extent of slamming load area along the span, in m, taken as:

$\ell_{SL} = \sqrt{A_{SL}}$ but not to be greater than $0.5\ell_{shr}$.

b_{SL} : Breadth of impact area supported by primary supporting member, in m, taken as:

$b_{SL} = \sqrt{A_{SL}}$ but not to be greater than S.

A_{SL} : Surface defined in [3.2.6].

Figure 3 : Distribution of f_{dist} along the span of simple primary supporting members

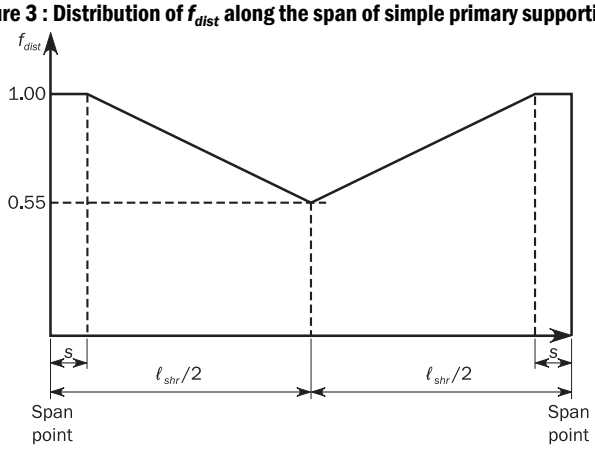

c) Direct calculation method for slamming shear force

For complex arrangements of primary supporting members, the greatest shear force, Q_{SL}, at any location along the span of each primary supporting member is to be derived by direct calculation in accordance with Table 1.

d) Web thickness of primary supporting member

The net web thickness, t_w, in mm, of primary supporting members adjacent to the shell is not to be less than:

$$t_w = \frac{s_W}{70}\sqrt{\frac{R_{eH}}{235}}$$

where:

s_W : Plate breadth, in mm, taken as the spacing between the web stiffening.

Table 1 : Direct calculation methods for derivation of Q_{SL}

Type of analysis	Model extent	Assumed end fixity of floors
Beam theory	Overall span of member between effective bending supports.	Fixed at ends
Double bottom grillage	Longitudinal extent to be one cargo tank length. Transverse extent to be between inner hopper knuckle and centreline.	Floors and girders to be fixed at boundaries of the model.
Note 1: The envelope of greatest shear force along each primary supporting member is to be derived by applying the load patch on a square area as defined in [3.2.6], to a number of locations along the span. Note 2: A more extensive model in length and breadth can be considered.		

3.3 Bow impact

3.3.1 Application

The side structure in the ship forward area is to be strengthened against bow impact pressures. The strengthening is to extend forward of 0.1 *L* from the FP and vertically above the minimum design ballast draught, T_{BAL}, defined in Ch 1, Sec 4, [3.1.5] and forecastle deck if any. See Figure 4.

Figure 4 : Extent of strengthening against bow impact

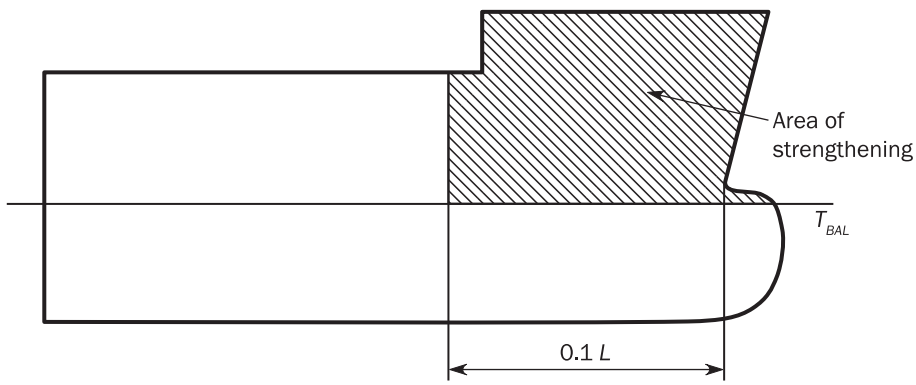

Outside the strengthening area the scantlings are to be tapered to maintain continuity of longitudinal and/or transverse strength.

3.3.2 Design to resist bow impact loads

a) In the bow impact strengthening area, longitudinal framing is to be carried as far forward as practicable.

The design of end connections of stiffeners in the bow impact region are to ensure end fixity, either by making the stiffeners continuous through supports or by providing end brackets complying with Ch 3, Sec 6, [3.2]. Where it is not practical to comply with this requirement, the net plastic section modulus, $Z_{pl\text{-}alt}$, in cm³, for alternative end fixity arrangements is not to be less than:

$$Z_{pl-alt} = \frac{16 Z_{pl}}{f_{bdg}}$$

where:

Z_{pl} : Effective net plastic section modulus, in cm³, required by [3.3.4].

b) Scantlings and arrangements of primary supporting members, including decks and bulkheads, in way of the stiffeners, are to comply with [3.3.6]. In areas of the greatest bow impact load, the web stiffeners arranged perpendicular to the hull envelope plating and the double sided lug connections are to be provided.

The main stiffening direction of decks and bulkheads supporting shell framing is to be arranged parallel to the span direction of the supported shell frames, to protect against buckling.

3.3.3 Side shell plating

The net thickness of the side shell plating, t, in mm is not to be less than:

$$t = 0.0158\alpha_p\, b \sqrt{\frac{P_{FB}}{C_a\, R_{eH}}}$$

where:

C_a : Permissible bending stress coefficient taken as:

C_a = 1.0 for acceptance criteria set AC-I.

3.3.4 Side shell stiffeners

The side shell stiffeners within the strengthening area defined in [3.3.1] are to comply with the following criteria:

a) The effective net plastic section modulus, Z_{pl}, in cm^3 in association with the effective plating to which it is attached, is not to be less than:

$$Z_{pl} = \frac{P_{FB}\, s\, \ell_{bdg}^{\,2}}{f_{bdg}\, C_s\, R_{eH}}$$

where:

C_s : Permissible bending stress coefficient taken as:

C_s = 0.9 for acceptance criteria set AC-I.

b) The net web thickness, t_w, in mm, is not to be less than:

$$t_w = \frac{P_{FB}\, s\, \ell_{shr}}{2 d_{shr}\, C_t\, \tau_{eH}}$$

where:

d_{shr} : Effective web depth of stiffener, in mm, as defined in Ch 3, Sec 7, [1.4.3].

C_t : Permissible shear stress coefficient taken as:

C_t = 1.0 for acceptance criteria set AC-I.

c) The slenderness ratio is to comply with Ch 8, Sec 2.

3.3.5 Bow impact load area for primary supporting members

The scantlings of primary supporting members according to [3.3.6] are based on the application of the bow impact pressure, as defined in Ch 4, Sec 5, [3.3.1], to an idealised bow impact load area of hull envelope plating, A_{Bl}, in m^2, is given by:

$$A_{Bl} = \frac{1.1\, L\, B\, C_b}{1000}$$

3.3.6 Primary supporting members

a) The section modulus of the primary supporting member is to apply along the bending span clear of end brackets and cross sectional areas of the primary supporting member are to be applied at the ends/supports and may be gradually reduced along the span and clear of the ends/supports following the distribution of f_{dist} indicated in Figure 3.

b) Primary supporting members in the bow impact strengthening area are to be configured to provide effective continuity of strength and the avoidance of hard spots.

c) End brackets of primary supporting members are to be suitably stiffened along their edge. Consideration is to be given to the design of bracket toes to minimise abrupt changes of cross section.

d) Tripping arrangements are to comply with Ch 8, Sec 2, [5.1.1]. In addition, tripping brackets are to be fitted at the toes of end brackets and at locations where the primary supporting member flange is knuckled or curved.

e) The net section modulus of each primary supporting member, Z_{n50}, in cm^3, is not to be less than:

$$Z_{n50} = 1000 \frac{f_{bdg-pt}\, P_{FB}\, b_{BI}\, f_{BI}\, \ell_{bdg}^{\,2}}{f_{bdg}\, C_s\, R_{eH}}$$

where:

$f_{bdg\text{-}pt}$: Correction factor for the bending moment at the ends and considering the patch load taken as:

$$f_{bdg-pt} = 3\, f_{BI}^{\,3} - 8\, f_{BI}^{\,2} + 6\, f_{BI}$$

f_{BI} : Patch load modification factor taken as:

$$f_{BI} = \frac{\ell_{BI}}{\ell_{bdg}}$$

ℓ_{BI} : Extent of bow impact load area, in m, along the span:

$\ell_{BI} = \sqrt{A_{BI}}$ but not to be taken as greater than ℓ_{bdg}.

b_{BI} : Breadth of impact load area, in m, supported by the primary supporting member, to be taken as the spacing between primary supporting members, S, as defined in Ch 1, Sec 4, Table 5, but not to be taken as greater than ℓ_{BI}.

A_{BI} : Bow impact load area, in m^2, as defined in [3.3.5].

f_{bdg} : Bending moment factor taken as:

f_{bdg} = 12 for primary supporting members with end fixed continuous flange or where brackets at both ends are fitted in accordance with Ch 3, Sec 6, [4.4].

C_s : Permissible bending stress coefficient taken as:

C_s = 0.8 for acceptance criteria set AC-I.

f) The net shear area of the web, $A_{shr\text{-}n50}$, in cm^2, of each primary supporting member at the support/toe of end brackets is not to be less than:

$$A_{shr-n50} = \frac{5 f_{PL}\, P_{FB}\, b_{BI}\, \ell_{shr}}{C_t\, \tau_{eH}}$$

where:

f_{PL} : Patch load modification factor taken as:

$$f_{PL} = \frac{\ell_{BI}}{\ell_{shr}}$$

ℓ_{BI} : Extent of bow impact load area, in m, along the span taken as,

$\ell_{BI} = \sqrt{A_{BI}}$ but not greater than ℓ_{shr}.

C_t : Permissible shear stress coefficient taken as:

C_t = 0.75 for acceptance criteria set AC-I.

g) The net web thickness of each primary supporting member, t_w, in mm including decks/bulkheads in way of the side shell is not to be less than:

$$t_w = \frac{P_{FB}\, b_{BI}}{\sin\varphi_w\, \sigma_{cr}}$$

where:

φ_w : Angle, in deg, between the primary supporting member web and the shell plate, see Figure 5.

σ_{cr} : Critical buckling stress in compression of the web of the primary supporting member or deck/bulkhead panel in way of the applied load given by Ch 8, Sec 5, [2.2.3], in N/mm^2. In the calculation, both σ_x and σ_y given in Ch 8, Sec 5, [2.2.3] are to be considered and UP-B is to be applied.

Figure 5 : Angle between shell primary member and shell plate

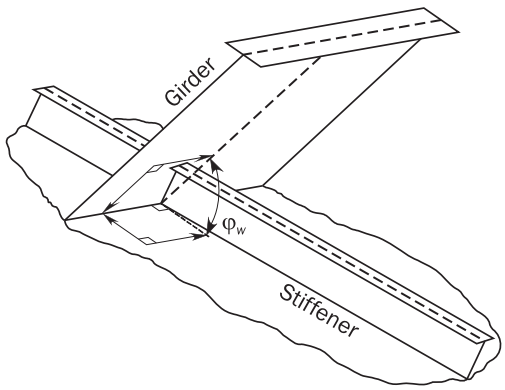

4 ADDITIONAL SCANTLING REQUIREMENTS

4.1 Plate stem

4.1.1

The net thickness, t_{Stm} in mm, is not to be less than:

$t_{Stm} = (0.6 + 0.4S_B)\,(0.08\,L + 2.7)\,\sqrt{k}$ but need not be greater than $22\,\sqrt{k} - 1$

where:

S_B : Spacing, in m, between horizontal stringers (partial or not), breasthooks, or equivalent horizontal stiffening members.

Starting from 0.6 m above the summer load waterline up to $T_{SC} + C_w$, the net thickness may gradually be reduced to 0.8 t_{Stm}.

4.1.2 Breasthooks and diaphragm plating

The net thickness of breasthooks/diaphragm plates, in way of bow impact strengthening area defined in [3.3.1], t_w, in mm, is not to be less than:

$$t_w = \frac{s}{70}\sqrt{\frac{R_{eH}}{235}}$$

where:

s : Spacing of stiffeners on the web, as defined in Ch 1, Sec 4, Table 5, in mm. Where no stiffeners are fitted, s is to be taken as the depth of the web.

4.2 Thruster tunnel

4.2.1

The net thickness of the tunnel plating, t_{tun}, in mm, is not to be less than the net required thickness for the shell plating in the vicinity of the bow thruster.

In addition, t_{tun} is not to be taken less than:

$$t_{tun} = 0.008\ d_{tun} + 1.8$$

where:

d_{tun} : Inside diameter of the tunnel, in mm, but not to be taken less than 970 mm.

Where the outboard ends of the tunnel are provided with bars or grids, the bars or grids are to be effectively secured.

SECTION 2
MACHINERY SPACE

1 GENERAL

1.1 Application

1.1.1

The requirements of this section apply to the scantlings and arrangement of structures located in the machinery space. It is the shipyard responsibility to design the ship in accordance with the machinery manufacturer's requirements.

2 MACHINERY SPACE ARRANGEMENT

2.1 Structural arrangement

2.1.1

Where openings in decks/bulkheads are provided in the machinery space, the arrangements are to support the deck, side, and bottom structure.

2.1.2

All parts of the machinery, shafting, etc, are to be supported to distribute the loads into the ship's structure. The adjacent structure is to be suitably stiffened.

2.1.3

Primary supporting members are to be positioned giving consideration to the provision of through stiffeners and in line pillar supports to achieve an efficient structural design.

2.1.4

The spacing of web frames in way of transversely framed machinery spaces is generally not to exceed five transverse frame spaces. Web frames are to be connected at the top and bottom to members of suitable stiffness, and supported by deck transverses.

2.1.5

End connections of side longitudinals at transverse bulkheads are to provide fixity, lateral support, and when not continuous are to be provided with soft-toe brackets. Brackets lapped onto the longitudinals are not to be fitted.

2.1.6

Where a transverse framing system is adopted, deck stiffeners are to be supported by a suitable arrangement of longitudinal girders in association with pillars or pillar bulkheads. Where fitted, deck transverses are to be arranged in line with web frames to provide end fixity and transverse continuity of strength.

Where a longitudinal framing system is adopted, deck longitudinals are to be supported by deck transverses in line with web frames in association with pillars or pillar bulkheads.

2.1.7

Machinery casings are to be supported by a suitable arrangement of deck transverses and longitudinal girders in association with pillars or pillar bulkheads. In way of particularly large machinery casing openings, cross ties may be required. These are to be arranged in line with deck transverses.

2.1.8

The foundations for main propulsion units, reduction gears, shaft and thrust bearings, and the structure supporting those foundations are to maintain the required alignment and rigidity under all anticipated conditions of loading. Consideration is to be given to the submittal of the following plans to the machinery manufacturer for review:

a) Foundations for main propulsion units.

b) Foundations for reduction gears.

c) Foundations for thrust bearings.

d) Structure supporting a), b) and c).

2.2 Double bottom

2.2.1 Double bottom height

The double bottom height at the centreline, irrespective of the location of the machinery space, is to be not less than the value defined in Ch 2, Sec 3, [2.3.1]. This depth may need to be considerably increased in relation to the type and depth of main machinery seatings.

The above height is to be increased by the shipyard where the machinery space is very large and where there is a considerable variation in draught between light ballast and full load conditions.

Where the double bottom height in the machinery space differs from that in adjacent spaces, structural continuity of longitudinal members is to be provided by sloping the inner bottom over an adequate longitudinal extent. The knuckles in the sloped inner bottom are to be located in way of floors. Lesser double bottom height may be accepted in local areas provided that the overall strength of the double bottom structure is not thereby impaired.

2.2.2 Centreline girder

The double bottom is to be arranged with a centreline girder. In way of any openings for manholes on the centreline girder, permitted only where absolutely necessary for double bottom access and maintenance, local strengthening is to be arranged.

2.2.3 Side bottom girders

In the machinery space, the number of side bottom girders is to be adequately increased, with respect to the adjacent areas, to provide adequate rigidity of the structure. The side bottom girders in longitudinal stiffened double bottom, are to be a continuation of any bottom longitudinals in the areas adjacent to the machinery space and are generally to have a spacing not greater than 3 times that of longitudinals and in no case greater than 3 m.

2.2.4 Girders in way of machinery seatings

Additional side bottom girders are to be fitted in way of machinery seating.

2.2.5 Floors in longitudinally stiffened double bottom

Where the double bottom is longitudinally stiffened, plate floors are to be fitted at every frame under the main engine and thrust bearing. Outboard of the engine and bearing seatings, the floors may be fitted at alternate frames.

2.2.6 Floors in transversely framed double bottom

Where the double bottom in the machinery space is transversely stiffened, floors are to be arranged at every frame.

2.2.7 Manholes and wells

The number and size of manholes in floors located in way of seatings and adjacent areas are to be kept to the minimum necessary for double bottom access and maintenance.

In general, manhole edges are to be stiffened with flanges; failing this, the floor plate is to be adequately stiffened with flat bars at manhole sides.

Manholes with perforated portable plates are to be fitted in the inner bottom in the vicinity of wells arranged close to the aft bulkhead of the engine room.

Drainage of the tunnel is to be arranged through a well located at the aft end of the tunnel.

2.2.8 Inner bottom plating

Where main engines or thrust bearings are bolted directly to the inner bottom, the net thickness of the inner bottom plating is to be at least 19 mm. Hold-down bolts are to be arranged as close as possible to floors and longitudinal girders. Plating thickness and the arrangements of hold-down bolts are also to consider the manufacturer's recommendations.

2.2.9 Heavy equipment

Where heavy equipment is mounted directly on the inner bottom, the thickness of the floors and girders is to be suitably increased.

3 MACHINERY FOUNDATIONS

3.1 General

3.1.1

Main engines and thrust bearings are to be effectively secured to the hull structure by foundations of strength that is sufficient to resist the various gravitational, thrust, torque, dynamic, and vibratory forces which may be imposed on them.

3.1.2

In the case of higher power internal combustion engines or turbine installations, the foundations are generally to be integral with the double bottom structure. Consideration is to be given to substantially increase the inner bottom plating thickness in way of the engine foundation plate or the turbine gear case and the thrust bearing, see Type 1 of Figure 1.

3.1.3

For main machinery supported on foundations of Type 2, as shown in Figure 2, the forces from the engine into the adjacent structure are to be distributed as uniformly as possible. Longitudinal members supporting the foundation are to be aligned with girders in the double bottom, and transverse stiffening is to be arranged in line with the floors, see Type 2 of Figure 2.

Figure 1 : Machinery foundations Type 1

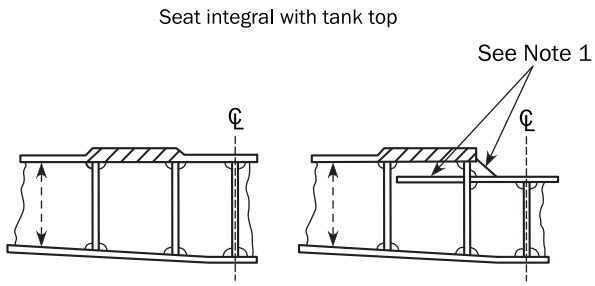

Figure 2 : Machinery foundations Type 2

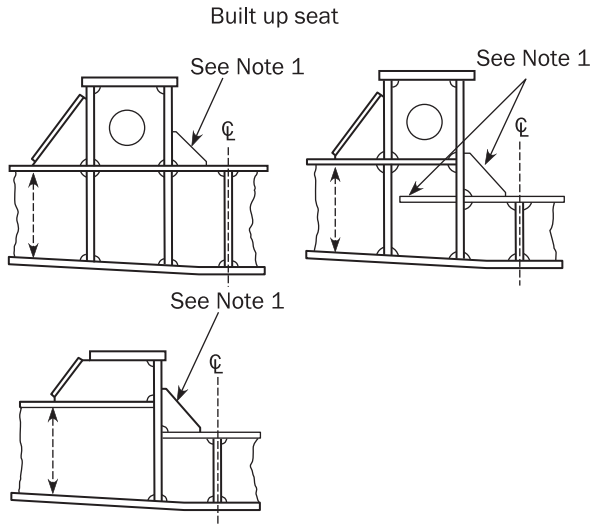

Note 1: Brackets are to be as large as possible. Brackets may be omitted to avoid interference with the girders of the engine foundation, in accordance with recommendations of the engine manufacturer.

3.2 Foundations for internal combustion engines and thrust bearings

3.2.1

In determining the scantlings of foundations for internal combustion engines and thrust bearings, consideration is to be given to the general rigidity of the engine and to its design characteristics with regard to out of balance forces.

3.2.2

Generally, two girders are to be fitted in way of the foundation for internal combustion engines and thrust bearings.

3.3 Auxiliary foundations

3.3.1

Auxiliary machinery is to be secured on foundations that are of suitable size and arrangement to distribute the loads from the machinery evenly into the supporting structure.

SECTION 3
AFT PART

SYMBOLS

For symbols not defined in this section, refer to Ch 1, Sec 4.

1 GENERAL

1.1 Application

1.1.1

The requirements of this section apply for the scantlings and arrangement of structures located aft of the aft peak bulkhead.

2 AFT PEAK

2.1 Structural arrangement

2.1.1 Floors

Floors are to be fitted at each frame space in the aft peak and carried to a height at least above the stern tube. Where floors do not extend to flats or decks, they are to be stiffened by flanges at their upper end.

Heavy plate floors are to be fitted in way of the aft face of the horn and in line with the webs in the rudder horn. They may be required to be carried up to the first deck or flat. In this area, cut outs, scallops or other openings are to be kept to a minimum.

2.1.2 Platforms and side girders

Platforms and side girders within the peak are to be arranged in line with those located in the area immediately forward.

Where this arrangement is not possible due to the shape of the hull and access needs, structural continuity between the peak and the structures of the area immediately forward is to be ensured by adopting wide tapering brackets.

Where the aft peak is adjacent to a machinery space whose side is longitudinally framed, the side girders in the aft peak are to be fitted with tapering brackets.

Where the depth from the peak tank top to the weather deck is greater than 2.6 m and the side is transversely framed, one or more side girders are to be fitted, preferably in line with similar structures existing forward.

2.1.3 Longitudinal bulkheads

A longitudinal non-tight bulkhead is to be fitted on the centreline of the ship, in general in the upper part of the peak, and stiffened at each frame spacing.

Where either the stern overhang is very large or the maximum breadth of the space divided by watertight and wash bulkheads is greater than 20 m, additional longitudinal wash bulkheads may be required.

2.1.4 Alternative design verification

The spacing and arrangement requirements, defined in [2.1.1], [2.1.2] and [2.1.3] may be increased, if the designer performs a verification by means of grillage analysis or FE analysis and provides their full documentation. The acceptance criteria to be applied are defined in Ch 6, Sec 6, [3]. A FE analysis is to be performed under consideration of the requirements provided in Ch 7.

2.2 Stiffening of floors and girders in aft peak

2.2.1

Stiffeners on the floors and girders in aft peak ballast or fresh water tanks above propeller are to be designed in accordance with [2.2.2] and [2.2.3]. This applies for stiffeners located in an area extending longitudinally between the forward edge of the rudder and the after end of the propeller boss and transversely within the diameter of the propeller.

2.2.2

The height of stiffeners, h_{stf}, in mm, on the floors and girders are not to be less than:

$h_{stf} = 80\ \ell_{stf}$ for flat bar stiffeners.

$h_{stf} = 70\ \ell_{stf}$ for bulb profiles and flanged stiffeners.

where:

ℓ_{stf} : Length of stiffener, in m, as shown in Figure 1. Length need not be taken greater than 5 m.

2.2.3

End brackets are to be provided as follows:

- Brackets are to be fitted at the lower and upper ends when $\ell_{stf\text{-}t}$ exceeds 4 m.
- Brackets are to be fitted at the lower end when $\ell_{stf\text{-}t}$ exceeds 2.5 m.

  where:

  $\ell_{stf\text{-}t}$: Total length of stiffener, in m, as shown in Figure 1.

Figure 1 : Stiffening of floors and girders in the aft peak tank

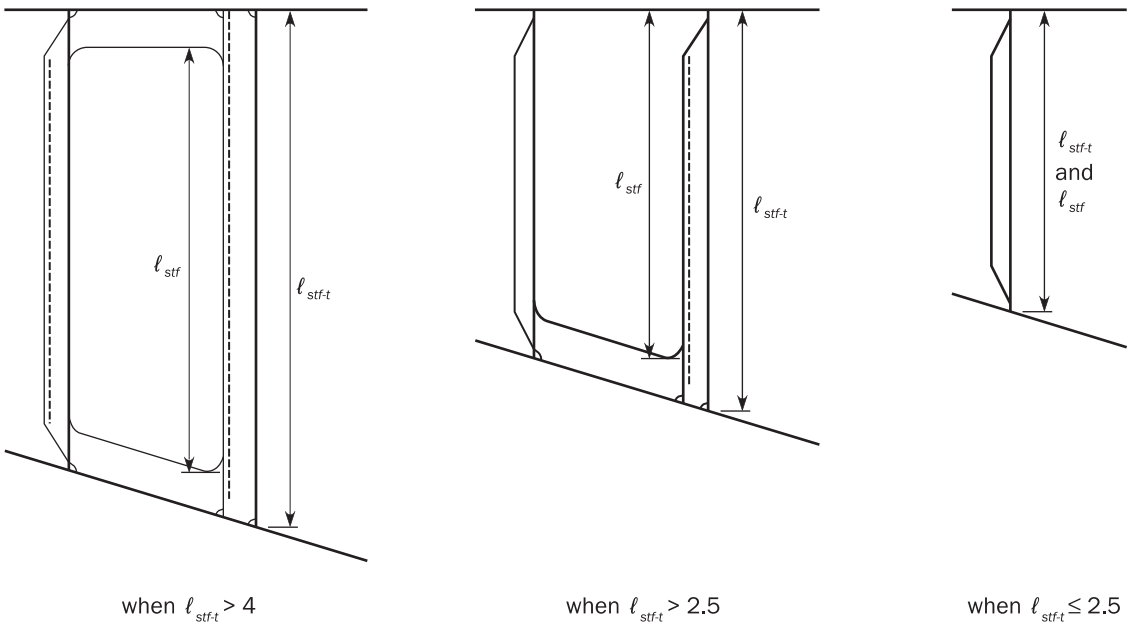

3 STERN FRAMES

3.1 General

3.1.1

Stern frames may be fabricated from steel plates or made of cast steel with a hollow section. For applicable material specifications and steel grades, see Ch 3, Sec 1. Stern frames of other material or construction will be specially considered.

3.1.2

Cast steel and fabricated stern frames are to be strengthened by adequately spaced plates with gross thickness not less than 80% of required thickness for stern frames, t_1, as defined in Table 1 or Table 2. Abrupt changes of section are to be avoided in castings; all sections are to have adequate tapering radius.

3.1.3

In the upper part of the propeller aperture, where the hull form is full and centreline supports are provided, the thickness of stern frames may be reduced to 80% of the applicable requirement in [3.2.1].

3.2 Propeller posts

3.2.1 Gross scantlings of propeller posts

The gross scantlings of propeller posts are not to be less than those obtained from the formulae in Table 1 for single screw ships and Table 2 for twin screw ships.

Scantlings and proportions of the propeller post which differ from Table 1 and Table 2 may be considered acceptable provided that the section modulus of the propeller post section about its longitudinal axis is not less than that calculated with the propeller post scantlings in Table 1 or Table 2, as applicable.

Table 1 : Single screw ships - Gross scantlings of propeller posts

Gross scantlings of propeller posts, in mm	Fabricated propeller post	Cast propeller post	Bar propeller post, cast or forged, having rectangular section
	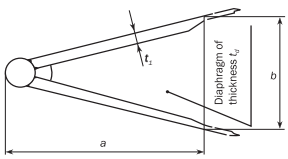	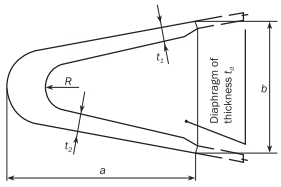	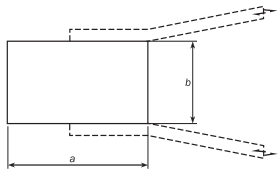
a	$50\ L_1^{1/2}$	$33\ L_1^{1/2}$	$10\sqrt{7.2L - 256}$
b	$35\ L_1^{1/2}$	$23\ L_1^{1/2}$	$10\sqrt{4.6L - 164}$
t_1	$2.5\ L_1^{1/2}$	$3.2\ L_1^{1/2}$	-
t_2	-	$4.4\ L_1^{1/2}$	-
t_d	$1.3\ L_1^{1/2}$	$2.0\ L_1^{1/2}$	-
R	-	50 mm	-

Table 2 : Twin screw ships - Gross scantlings of propeller posts

Gross scantlings of propeller posts, in mm	Fabricated propeller post	Cast propeller post	Bar propeller post, cast or forged, having rectangular section
	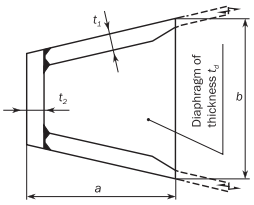	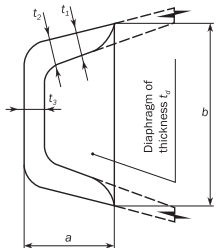	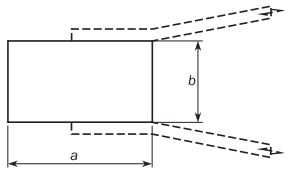
a	25 $L_1^{1/2}$	12.5 $L_1^{1/2}$	2.4 L + 6
b	25 $L_1^{1/2}$	25 $L_1^{1/2}$	0.8 L + 2
t_1	2.5 $L_1^{1/2}$	2.5 $L_1^{1/2}$	-
t_2	3.2 $L_1^{1/2}$	3.2 $L_1^{1/2}$	-
t_3	-	4.4 $L_1^{1/2}$	-
t_d	1.3 $L_1^{1/2}$	2.0 $L_1^{1/2}$	-

3.2.2 Propeller shaft bossing

In single screw ships, the thickness of the propeller shaft bossing, included in the propeller post, is not to be less than 60% of the dimension *b* required in [3.2.1] for bar propeller posts with a rectangular section.

3.3 Connections

3.3.1 Connections with hull structure

Stern frames are to be effectively attached to the aft structure and the required scantling for the lower part of the propeller post is to be extended from the aft end of propeller post, at the centerline of the propeller shaft, to a length not less than 1500 + 6 L_2 mm, in order to provide an effective connection with the keel. However, the stern frame need not extend beyond the aft peak bulkhead.

3.3.2 Connection with keel plate

The thickness of the lower part of the stern frames is to be gradually tapered to that of the solid bar keel or keel plate.

Where a keel plate is fitted, the lower part of the stern frame is to be designed to ensure an effective connection with the keel.

3.3.3 Connection with transom floors

Rudder posts and propeller posts are to be connected with transom floors having height not less than that of the double bottom height and a net thickness not less than that obtained, in mm, from the following formula:

$$t = 9 + 0.023\ L_1$$

3.3.4 Connection with centre girder

Where the stern frame is made of cast steel, the lower part of the stern frame is to be fitted, as far as practicable, with a longitudinal web for connection with the centre girder.

4 SPECIAL SCANTLING REQUIREMENTS FOR SHELL STRUCTURE

4.1 Shell plating

4.1.1 Shell plating connected with stern frame

The net thickness of shell plating connected with the stern frame is not to be less than that obtained, in mm, from the following formula:

$$t = 0.094\ (L_2 - 43) + 0.009\ b$$

In way of the boss and heel plate, the net thickness, t, of shell plating, in mm, is not to be less than:

$$t = 0.105\ (L_2 - 47) + 0.011\ b$$

where:

b : Breadth of plate panel, in mm, as defined in Ch 3, Sec 7, [2.2.2].

4.1.2 Heavy shell plates

Heavy shell plates are to be fitted locally in way of the heavy plate floors as required by [2.1.1]. The net thickness of heavy shell plates is not to be less than the value given in [4.1.1]. Outboard of the heavy floors, the heavy shell plates may be reduced in thickness in as gradual a manner as practicable. Where the horn plating is radiused into the shell plating, the radius at the shell connection, r in mm, is not to be less than:

$$r = 150 + 0.8\ L_2$$

4.1.3 Thruster tunnel plating

The net thickness of the tunnel plating, t_{tun} in mm, is to comply with the requirements in Ch 10, Sec 1, [4.2.1].

SECTION 4
TANKS SUBJECT TO SLOSHING

SYMBOLS

For symbols not defined in this section, refer to Ch 1, Sec 4.

α_p : Correction factor for the panel aspect ratio to be taken as:

$$\alpha_p = 1.2 - \frac{b}{2.1\,a} \quad \text{but not to be taken as greater than 1.0.}$$

a : Length of plate panel, in mm, as defined in Ch 3, Sec 7, [2.1.1].

b : Breadth of plate panel, in mm, as defined in Ch 3, Sec 7, [2.1.1].

ℓ_{bdg} : Effective bending span, as defined in Ch 3, Sec 7, [1.1.2], in m.

ℓ_{slh} : Effective sloshing length, in m, as defined in Ch 4, Sec 6, [6.3.2].

b_{slh} : Effective sloshing breadth, in m, as defined in Ch 4, Sec 6, [6.4.2].

$I_{y\text{-}n50}$: Net horizontal hull girder moment of inertia, at the longitudinal position being considered, as defined in Ch 5, Sec 1, [1.5], in m^4.

M_{sw} : Permissible hull girder hogging and sagging still water bending moment for seagoing operation at the location being considered, in kNm, as defined in Ch 4, Sec 4, [2.2.2].

z_n : Distance from the baseline to the horizontal neutral axis, as defined in Ch 5, Sec 1, in m.

z : Vertical coordinate of the load calculation point or at the reference point under consideration, in m.

σ_{hg} : Hull girder bending stress, in N/mm^2, calculated at the load calculation point defined in Ch 3, Sec 7, [2.2] or in Ch 3, Sec 7, [3.2], as the case may be:

$$\sigma_{hg} = \left(\frac{(z - z_n)\ M_{sw}}{I_{y-n50}}\right) 10^{-3}$$

1 GENERAL

1.1 Application

1.1.1

The requirements of this section cover the strengthening requirements for localised sloshing loads that may occur in tanks carrying liquid.

Sloshing loads due to the free movement of liquid in tanks are given in Ch 4, Sec 6, [6].

1.2 General requirements

1.2.1 Filling heights of cargo and ballast tanks

The scantlings of all cargo and ballast tanks are to comply with the sloshing requirements given in this section for the following cases:

- Unrestricted filling height for ballast tanks,
- Unrestricted filling height for cargo tanks with cargo density equal to ρ_L, as defined in Ch 4, Sec 6,
- All filling levels up to h_{part} for cargo tanks with cargo density equal to ρ_{part} taken as:

$$h_{part} = \frac{h_{tk} \cdot \rho_L \cdot f_{CD}}{\rho_{part}}$$

where:

h_{part} : Maximum permissible filling height, in m, associated with a partial filling of the considered cargo tank with a high liquid density equal to ρ_{part}.

h_{tk} : Maximum tank height, in m.

ρ_L : Cargo density as defined in Ch 4, Sec 6.

f_{cd} : Factor defined in Ch 4, Sec 6.

ρ_{part} : Maximum permissible high liquid density as defined in Ch 4, Sec 6.

1.2.2 Cargo holds of bulk carrier intended for the carriage of ballast water

Cargo holds of bulk carrier intended for the carriage of ballast water are assumed either full or empty in seagoing condition and are not required to be assessed for sloshing pressures.

1.2.3 Structural details

Local scantling increases due to sloshing loads are to be made with due consideration given to details and avoidance of hard spots, notches and other harmful stress concentrations.

1.3 Application of sloshing pressure

1.3.1 General

The structural members of the following tanks are to be assessed for the design sloshing pressures $P_{slh\text{-}lng}$ and $P_{slh\text{-}t}$ in accordance with [1.3.4] and [1.3.5].

a) Cargo and slop tanks of oil tankers.

b) Fore peak and aft peak ballast tanks.

c) Other tanks which allow free movement of liquid, e.g. ballast tanks, fuel oil bunkering tanks and fresh water tanks, etc.

Where the effective sloshing length, ℓ_{slh} is less than 0.03 L, calculations involving $P_{slh\text{-}lng}$ are not required and where the effective sloshing breadth b_{slh} is less than 0.32 B, calculations involving $P_{slh\text{-}t}$ are not required.

1.3.2 Minimum sloshing pressure

The minimum sloshing pressure, $P_{slh\text{-}min}$, as defined in Ch 4, Sec 6, [6.2] is to apply to tanks in which the effective sloshing length, ℓ_{slh} or breadth b_{slh}, is less than defined in [1.3.1].

1.3.3 Structural members to be assessed

The following structural members are to be assessed:

a) Plates and stiffeners forming boundaries of tanks.

b) Plates and stiffeners on wash bulkheads.

c) Web plates and web stiffeners of primary supporting members located in tanks.

d) Tripping brackets supporting primary supporting members in tanks.

1.3.4 Application of design sloshing pressure due to longitudinal liquid motion

The design sloshing pressure due to longitudinal liquid motion, $P_{slh\text{-}lng}$, as defined in Ch 4, Sec 6, [6.3.3] is to be applied to the following members as shown in Figure 1.

a) Transverse tight bulkheads.

b) Transverse wash bulkheads.

c) Stringers on transverse tight and wash bulkheads.

d) Plating and stiffeners on the longitudinal bulkheads, deck and inner hull within a distance from the transverse bulkhead taken as:

- 0.25 ℓ_{slh},
- The distance between the transverse bulkhead and the first web frame if located inside the tank at the considered level,

whichever is less.

In addition, the first web frame next to a transverse tight or wash bulkhead if the web frame is located within 0.25 ℓ_{slh} from the bulkhead, as shown in Figure 1, is to be assessed for the web frame reflected sloshing pressure, $P_{slh\text{-}wf}$, as defined in Ch 4, Sec 6, [6.3.4].

The minimum sloshing pressure, $P_{slh\text{-}min}$, as defined in Ch 4, Sec 6, [6.2] is to be applied to all other members.

Figure 1 : Application of sloshing loads due to longitudinal liquid motion

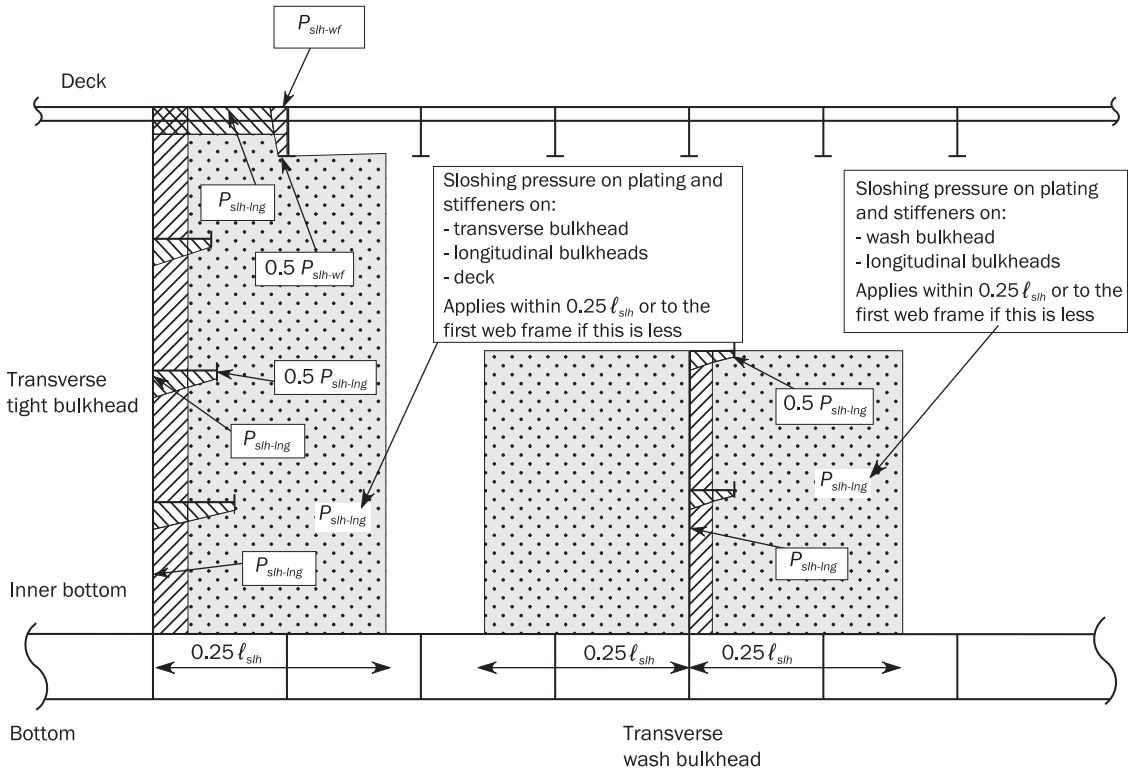

1.3.5 Application of design sloshing pressure due to transverse liquid motion

The design sloshing pressure due to transverse liquid motion, $P_{slh\text{-}t}$, as defined in Ch 4, Sec 6, [6.4.3], is to be applied to the following members as shown in Figure 2.

a) Longitudinal tight bulkhead.

b) Longitudinal wash bulkhead.

c) Horizontal stringers on longitudinal tight and wash bulkheads.

d) Plating and stiffeners on the transverse tight bulkheads including stringers and deck within a distance from the longitudinal bulkhead taken as:

- 0.25 b_{slh},
- The distance between the longitudinal bulkhead and the first girder if located inside the tank at the considered level,

whichever is less.

In addition, the first girder next to the longitudinal tight or wash bulkhead if the girder is located within 0.25 b_{slh} from the longitudinal bulkhead, as shown in Figure 2, is to be assessed for the reflected sloshing pressure, $P_{slh\text{-}grd}$ as defined in Ch 4, Sec 6, [6.4.4].

The minimum sloshing pressure, $P_{slh\text{-}min}$, as defined in Ch 4, Sec 6, [6.2], is to be applied to all other members.

Figure 2 : Application of sloshing loads due to transverse liquid motion

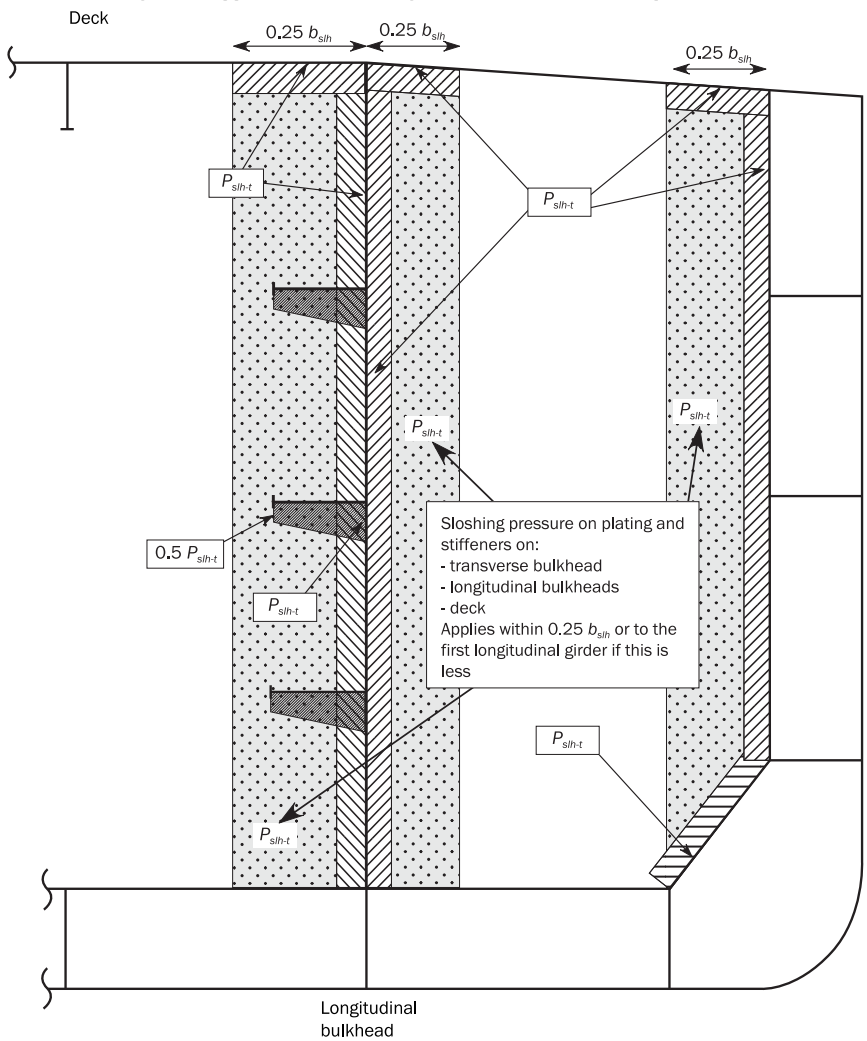

1.3.6 Combination of transverse and longitudinal fluid motion

The sloshing pressures due to transverse and longitudinal fluid motion are assumed to act independently. Structural members are therefore to be evaluated based on the greatest sloshing pressure due to longitudinal and transverse fluid motion.

1.3.7 Additional sloshing impact assessment

For tanks with effective sloshing breadth, b_{slh}, greater than 0.56 B or effective sloshing length, ℓ_{slh}, greater than 0.13 L, an additional sloshing impact assessment is to be carried out in accordance with the individual Society's procedures.

2 SCANTLING REQUIREMENTS

2.1 Plating

2.1.1 Net thickness

The net thickness of plating, t in mm, subjected to sloshing pressures is not to be less than:

$$t = 0.0158\ \alpha_p\ b \sqrt{\frac{P_{slh}}{C_a\ R_{eH}}}$$

where:

C_a : Permissible bending stress coefficient to be taken as:

$C_a = \beta_a - \alpha_a \dfrac{|\sigma_{hg}|}{R_{eH}}$ with coefficients defined in Table 1, but not to be taken greater than $C_{a\text{-}max}$.

σ_{hg} : Hull girder bending stress, in N/mm^2, corresponding to the greatest of the sagging and hogging bending moment in absolute value.

P_{slh} : The greater of $P_{slh\text{-}lng}$, $P_{slh\text{-}t}$ or $P_{slh\text{-}min}$ as specified in [1.3].

Table 1 : Definition β_a, α_a and $C_{a\text{-}max}$

Acceptance criteria set	Structural member		β_a	α_a	$C_{a\text{-}max}$
AC-S	Longitudinal strength members in the cargo hold region including but not limited to: • Deck. • Longitudinal plane bulkhead. • Horizontal corrugated longitudinal bulkhead. • Longitudinal girders and stringers.	Longitudinally stiffened plating	0.9	0.5	0.8
		Transversely or vertically stiffened plating	0.9	1.0	0.8
	Other strength members including: • Vertical corrugated longitudinal bulkhead. • Transverse plane bulkhead. • Transverse corrugated bulkhead. • Transverse stringers and web frames. • Plating of tank boundaries and primary supporting members outside the cargo hold region.		0.8	0	0.8

2.2 Stiffeners

2.2.1 Net section modulus

The net section modulus, Z in cm^3, of stiffeners subjected to sloshing pressures is not to be less than:

$$Z = \frac{P_{slh}\ s\ \ell_{bdg}^{\ 2}}{f_{bdg}\ C_s\ R_{eH}}$$

where:

f_{bdg} : Bending moment factor:

f_{bdg} = 12 for stiffeners fixed against rotation at each end. This is generally to be applied for scantlings of all continuous stiffeners.

f_{bdg} = 8 for stiffeners with one or both ends not fixed against rotation. This is generally to be applied to discontinuous stiffeners.

C_s : Permissible bending stress coefficient to be taken as:

- For members subject to hull girder stress: coefficient to be taken as defined in Table 2,
- $C_s = C_{s\text{-}max}$ for other cases.

P_{slh} : The greater of $P_{slh\text{-}ing}$, $P_{slh\text{-}t}$ or $P_{slh\text{-}min}$ as specified in [1.3].

$C_{s\text{-}max}$: Coefficient as defined in Table 3.

Table 2 : Permissible bending stress coefficient C_s

Sign of hull girder bending stress, σ_{hg} (1)	Lateral pressure acting on (2)	Stiffener boundary condition (3)	f_{bdg}	Coefficient C_s
Tension (positive)	Stiffener side	F - F	12	$C_s = \beta_s - \alpha_s \frac{\lvert\sigma_{hg}\rvert}{R_{eH}}$ but not to be taken greater than $C_{s\text{-}max}$
		F - S	8	$C_s = \beta_s - \alpha_s \frac{\lvert\sigma_{hg}\rvert}{R_{eH}}$ but not to be taken greater than $C_{s\text{-}max}$
		S - S	8	$C_s = C_{s\text{-}max}$
	Plate side	F - F	12	$C_s = C_{s\text{-}max}$
		F - S	8	$C_s = C_{s\text{-}max}$
		S - S	8	$C_s = \beta_s - \alpha_s \frac{\lvert\sigma_{hg}\rvert}{R_{eH}}$ but not to be taken greater than $C_{s\text{-}max}$

(1) σ_{hg} is to be considered for the hogging and sagging situations.
(2) For primary supporting members located inside the considered tank and for wash bulkheads, the sloshing pressure is to be applied both on stiffener and plate sides.
(3) F - F stands for both ends of the stiffener fixed against rotation
F - S stands for one end of the stiffener fixed and the other not fixed against rotation
S - S stands for both ends of the stiffener not fixed against rotation

Sign of hull girder bending stress, σ_{hg} (1)	Lateral pressure acting on (2)	Stiffener boundary condition (3)	f_{bdg}	Coefficient C_s
Compression (negative)	Stiffener side	F - F	12	$C_s = C_{s\text{-}max}$
		F - S	8	$C_s = C_{s\text{-}max}$
		S - S	8	$C_s = \beta_s - \alpha_s \frac{\lvert\sigma_{hg}\rvert}{R_{eH}}$ but not to be taken greater than $C_{s\text{-}max}$
	Plate side	F - F	12	$C_s = \beta_s - \alpha_s \frac{\lvert\sigma_{hg}\rvert}{R_{eH}}$ but not to be taken greater than $C_{s\text{-}max}$
		F - S	8	$C_s = \beta_s - \alpha_s \frac{\lvert\sigma_{hg}\rvert}{R_{eH}}$ but not to be taken greater than $C_{s\text{-}max}$
		S - S	8	$C_s = C_{s\text{-}max}$

(1) σ_{hg} is to be considered for the hogging and sagging situations.

(2) For primary supporting members located inside the considered tank and for wash bulkheads, the sloshing pressure is to be applied both on stiffener and plate sides.

(3) F - F stands for both ends of the stiffener fixed against rotation
F - S stands for one end of the stiffener fixed and the other not fixed against rotation
S - S stands for both ends of the stiffener not fixed against rotation

Table 3 : Definition β_s, α_s and $C_{s\text{-}max}$

Acceptance criteria set	Structural member		β_s	α_s	$C_{s\text{-}max}$
AC-S	Longitudinal strength members in the cargo hold region including but not limited to: • Deck stiffeners. • Stiffeners on longitudinal bulkheads. • Stiffeners on longitudinal girders and stringers.	Longitudinal stiffeners	0.85	1.0	0.75
		Transverse or vertical stiffeners	0.7	0	0.7
	Other strength members including: • Stiffeners on transverse bulkheads. • Stiffeners on transverse stringers and web frames. • Stiffeners on tank boundaries and primary supporting members outside the cargo hold region.		0.75	0	0.75

2.3 Primary supporting members

2.3.1 Web plating

The web plating net thickness of primary supporting members, t in mm, is not to be less than:

$$t = 0.0158\ \alpha_p\ b \sqrt{\frac{P_{slh}}{C_a\ R_{eH}}}$$

where:

P_{slh} : The greater of $P_{slh\text{-}lng}$, $P_{slh\text{-}t}$, $P_{slh\text{-}wf}$, $P_{slh\text{-}grd}$ and $P_{slh\text{-}min}$ as specified in [1.3]. The pressure is to be calculated at the load application point, defined in Ch 3, Sec 7, [4.1], taking into account the distribution over the height of the member, as shown in Figure 1 and Figure 2.

C_a : Permissible plate bending stress coefficient, as given in [2.1.1].

2.3.2 Stiffeners on web plating

The net section modulus, Z in cm^3, of each individual stiffener on the web plating of primary supporting members subjected to sloshing pressures is not to be less than:

$$Z = \frac{P_{slh}\ s\ \ell_{bdg}^{\ 2}}{f_{bdg}\ C_s\ R_{eH}}$$

where:

P_{slh} : The greater of $P_{slh\text{-}lng}$, $P_{slh\text{-}t}$, $P_{slh\text{-}wf}$, $P_{slh\text{-}grd}$ and $P_{slh\text{-}min}$ as specified in [1.3]. The pressure is to be calculated at the load application point, defined in Ch 3, Sec 7, [3.2], taking into account the distribution over the height of the member, as shown in Figure 1 and Figure 2.

C_s : Permissible bending stress coefficient as given in [2.2.1].

f_{bdg} : Bending moment factor as given in [2.2.1].

2.3.3 Tripping brackets supporting primary supporting members

The net section modulus, Z in cm^3 in way of the base within the effective length, d, of tripping brackets and net shear area, A_{shr} in cm^2, after deduction of cut-outs and slots, of tripping brackets supporting primary supporting members is not to be less than:

$$Z = \frac{1000\ P_{slh}\ s_{trip}\ h^2}{2\ C_s\ R_{eH}}$$

$$A_{shr} = 10\ \frac{P_{slh}\ s_{trip}\ h}{C_t\ \tau_{eH}}$$

where:

P_{slh} : The greater of $P_{slh\text{-}lng}$, $P_{slh\text{-}t}$, $P_{slh\text{-}wf}$, $P_{slh\text{-}grd}$ and $P_{slh\text{-}min}$ as specified in [1.3]. The average pressure may be calculated at mid point of the tripping bracket taking into account the distribution as shown Figure 1 and Figure 2.

s_{trip} : Mean spacing, between tripping brackets or other primary supporting members or bulkheads, in m.

h : Height of tripping bracket, see Figure 3, in m.

C_s : Permissible bending stress coefficient for tripping brackets to be taken as 0.75.

C_t : Permissible shear stress coefficient for tripping brackets to be taken as 0.75.

The effective breadth of the attached plate to be used for calculating the section modulus of the tripping bracket is to be taken as $h/3$.

Figure 3 : Effective length of tripping bracket

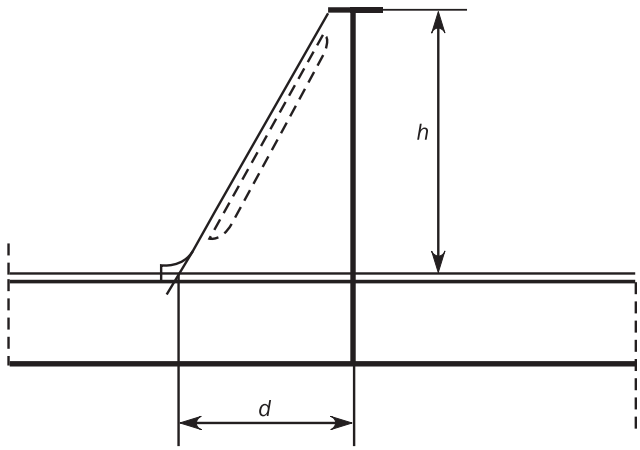

PART 1 CHAPTER 11

SUPERSTRUCTURE, DECKHOUSES AND HULL OUTFITTING

Table of Contents

SECTION 1
Superstructures, Deckhouses and Companionways
1 General
2 Structural Arrangement
3 Scantlings
SECTION 2
Bulwark and Guard Rails
1 General Requirements
2 Bulwarks
3 Guard Rails
SECTION 3
Equipment
1 General
2 Equipment Number Calculation
3 Anchoring Equipment
SECTION 4
Supporting Structure for Deck Equipment and Fittings
1 General
2 Anchoring Windlass and Chain Stopper
3 Mooring Winches
4 Cranes, Derricks, Lifting Masts and Life Saving Appliances
5 Bollards and Bitts, Fairleads, Stand Rollers, Chocks and Capstans
6 Miscellaneous Deck Fittings
SECTION 5
Small Hatchways
1 General
2 Small Hatchways Fitted on the Exposed Fore Deck

SECTION 1
SUPERSTRUCTURES, DECKHOUSES AND COMPANIONWAYS

SYMBOLS

For symbols not defined in this section, refer to Ch 1, Sec 4.

P : Pressure applied on the considered superstructure side or deck, in kN/m^2

$P = P_D$ for external decks,

$P = P_{dl}$ for unexposed deck,

$P = P_{Sl}$ for superstructure side.

P_D : Lateral pressure for exposed decks, in kN/m^2, as defined in Ch 4, Sec 5, [2] and in Ch 4, Sec 5, [4.2].

P_{dl} : Lateral pressure for unexposed decks, in kN/m^2, as defined in Ch 4, Sec 6, [5].

P_{Sl} : Lateral pressure for superstructure side, in kN/m^2, as defined in Ch 4, Sec 5, [4.3].

P_{FB} : Lateral pressure for side shell plating, in kN/m^2, affected by bow impact requirements according to Ch 4, Sec 5, [3.3.1].

P_A : External pressure for end bulkheads of superstructure and deckhouse walls, in kN/m^2 according to Ch 4, Sec 5, [4.4.1].

ℓ_{bdg} : Effective bending span, in m, as defined in Ch 3, Sec 7.

ℓ_{shr} : Effective shear span, in m, as defined in Ch 3, Sec 7.

c : Coefficient taken as:

$c = 0.75$ for beams, girders and transverses which are simply supported in one or both ends.

$c = 0.55$ in other cases.

m_a : Coefficient taken as:

$$m_a = 0.204 \frac{s}{1000\ell_{bdg}}\left[4 - \left(\frac{s}{1000\ell_{bdg}}\right)^2\right] \quad \text{with} \quad \frac{s}{1000\ell_{bdg}} \le 1$$

1 GENERAL

1.1 Application

1.1.1

The requirements of this section are applicable to superstructures, deckhouses and companionways, made of steel.

The requirements of Pt 1, Ch 6 apply in addition to those of this section for exposed decks of superstructure and the side of superstructure or deckhouse when this side is part of the side shell.

1.1.2

For the application of this section, a superstructure is considered being located aft or forward 0.4 *L* amidships or having a length of less than 0.15 *L*.

1.1.3

For the application of this section, the length of a deckhouse located within 0.4 *L* amidships is considered not exceeding 0.2 *L*.

1.2 Gross scantlings

1.2.1

With reference to Ch 3, Sec 2, [1.1.3], all scantlings and dimensions referred to in [3] are gross.

2 STRUCTURAL ARRANGEMENT

2.1 Structural continuity

2.1.1 Bulkheads and sides of deckhouses

The aft, front and side bulkheads are to be effectively supported by under deck structures such as bulkheads, girders and pillars.

Sides and main longitudinal and transverse bulkheads are to be in line in the various tiers of deckhouses. Where such arrangement in line is not possible, other effective support is to be provided.

Arrangements are to be made to minimise the effect of discontinuities in erections. All openings cut in the sides are to be framed and have well-rounded corners. Continuous coamings or girders are to be fitted below and above doors and similar openings.

2.1.2 Deckhouse corners

At the corners where the deckhouse is attached to the strength deck, attention is to be given to the arrangements to transmit load into the under deck supporting structure.

2.2 End connections

2.2.1 Deck stiffeners

Transverse beams are to be connected to side frames by brackets according to Ch 3, Sec 6, [3.2]. Beams crossing longitudinal walls and girders may be attached to the stiffeners of longitudinal walls and the webs of girders respectively by welding without brackets.

2.2.2 Longitudinal and transverse deck girders

Face plates are to be stiffened by tripping brackets according to Ch 3, Sec 6, [4.3].

2.2.3 End connections of superstructure frames

Vertical frames are to be welded to the main frames below, or to the deck under provision of a sufficient supporting structure.

2.3 Local reinforcement on bulkheads

2.3.1

Local reinforcement is to be provided in way of large openings and areas supporting life saving appliances or high loads from other equipment, fittings, etc.

3 SCANTLINGS

3.1 Superstructures sides and decks

3.1.1 Exposed sides and exposed deck plating

Exposed sides and exposed deck plating inclusive their supporting structure are to comply with the requirements given in [3.2.1] to [3.2.5] and bow impact requirements in Ch 10, Sec 1, [3.3], if applicable.

3.1.2 Deck plating of unexposed decks

The deck plating and supporting structures of unexposed decks of superstructures are to comply with requirements given in [3.2.2] to [3.2.5].

3.2 Deckhouses

3.2.1 Plating

The gross thickness of the plating, $t_{gr\text{-}exp}$, in mm, is not to be less than

$$t_{gr-exp} = 7.5\sqrt{\frac{ks}{s_{std}}} \text{ , on first tier.}$$

$$t_{gr-exp} = 7.0\sqrt{\frac{ks}{s_{std}}} \text{ , on second tier.}$$

$$t_{gr-exp} = 6.5\sqrt{\frac{ks}{s_{std}}} \text{ , on third tier and above.}$$

where:

s_{std} : Standard reference spacing of stiffeners or beams, in mm, taken as:

$$s_{std} = 470 + 1.67\ L_1$$

Where deck is protected by sheathing, the gross thickness of the deck plating may be reduced by 1.5 mm, without being less than 5 mm.

Where sheathing other than wood is used, attention is to be paid that the sheathing does not affect the steel. The sheathing is to be effectively fitted to the deck.

3.2.2 Deck plating of unexposed decks

The gross thickness of the unexposed deck plating, $t_{gr\text{-}unexp}$, in mm, is not to be less than the greater value of:

$t_{gr-unexp} = 0.9\ t_{gr-exp}$ at the tier considered, and

$t_{gr-unexp} = \left(5.8\ \frac{s}{1000} + 1\right)\sqrt{k}$ but not less than 5.5 mm.

3.2.3 Beams and stiffeners

The gross section modulus Z_{gr}, in cm^3, and the gross shear area $A_{gr\text{-}sh}$, in cm^2, of transverse beams and of stiffeners are not to be less than:

$$Z_{gr} = c\ k\ P\ \frac{s}{1000}\ \ell_{bdg}^{\ 2}$$

$$A_{gr-sh} = 0.05\ (1 - 0.817\ m_a)\ k\ P\ \frac{s}{1000}\ \ell_{shr}$$

3.2.4 Girders and transverses

The gross section modulus Z_{gr}, in cm^3, and the gross shear area $A_{gr\text{-}sh}$, in cm^2, of girders and transverses are not to be less than:

$Z_{gr} = c\ k\ P\ S\ \ell_{bdg}^{\ 2}$

$A_{gr-sh} = 0.05\ k\ P\ S\ \ell_{shr}$

The girder depth is not to be less than $\ell/25$. The web depth of girders scalloped for continuous deck beams is to be at least 1.5 times the depth of the deck beams.

3.2.5 Alternative grillage analysis for girders and transverses

Where arrangements of deck girders and transverses are such that these members act as a grillage structure, additional analysis may be carried out with a structural model based on the gross scantling.

The resulting stresses are not to exceed the following permissible bending, shear and equivalent stresses, in N/mm², taken as:

$\sigma_b = 150/k$

$\tau = 100/k$

$\sigma_{eqv} = 180/k$

3.3 Deckhouse walls and end bulkheads of superstructure

3.3.1 Application

The requirements in [3.3] apply to end bulkhead of superstructure and deckhouse walls forming the only protection for openings and for accommodations.

Special consideration may be given to the bulkhead scantlings of deckhouses which do not protect openings in the freeboard deck, superstructure deck or in the top of a lowest tier deckhouse. Special consideration may also be given to the bulkhead scantlings of deckhouses which do not protect machinery casings, provided they do not contain accommodation or do not protect equipment essential to the operation of the ship.

3.3.2 Plate thickness

The gross thickness of the plating t_{gr}, in mm, is not to be less than the greater of:

$$t_{gr} = 0.9\ \frac{s}{1000}\ \sqrt{kP_A} + 1.5$$

$$t_{gr} = \left(5.0 + \frac{L_2}{100}\right)\sqrt{k}$$, for the lowest tier.

$$t_{gr} = \left(4.0 + \frac{L_2}{100}\right)\sqrt{k}$$, for the upper tiers, without being less than 5.0 mm.

3.3.3 Stiffeners

The gross section modulus Z_{gr}, in cm³, of the stiffeners is not to be less than:

$$Z_{gr} = 0.35\ k\ P_A\ \frac{s}{1000}\ \ell^2$$

This requirement assumes the webs of lowest tier stiffeners to be efficiently welded to the decks. Scantlings for other types of end connections are to be specially considered.

The section modulus of deckhouse side stiffeners needs not to be greater than that of side frames on the deck situated directly below, taking account of spacing s and span ℓ.

3.4 Companionways

3.4.1

The scantlings of companionways are to be determined in accordance with [3.2] and [3.3].

SECTION 2
BULWARK AND GUARD RAILS

1 GENERAL REQUIREMENTS

1.1 Application

1.1.1

Bulwarks or guard rails are to be provided at the boundaries of exposed freeboard and superstructure decks, at the boundary of first tier of deckhouses and at the ends of superstructures.

1.2 Minimum height

1.2.1

Bulwarks, or guard rails, are to be a minimum of 1.0 m in height, measured above sheathing, and are to be constructed as required in [2.2] and [3.2]. Where this height would interfere with the normal operation of the ship, a lesser height may be accepted, on the basis of justifying information to be submitted.

2 BULWARKS

2.1 General

2.1.1

Plate bulwarks are to be stiffened at the upper edge by a suitable rail and supported either by stays or plate brackets spaced not more than 2.0 m apart.

The free edge of the stay or the plate bracket is to be stiffened.

2.1.2

Within 0.6 *L* amidships, bulwarks are to be arranged to ensure that they are free from hull girder stresses.

2.1.3

Bulwarks are to be adequately strengthened and increased in thickness in way of mooring pipes.

Cut-outs in bulwarks for gangways or other openings are to be kept clear of breaks of superstructures.

2.1.4

Bulwark plating and stays are to be adequately strengthened in way of eye plates used for shrouds or other tackles in use for cargo gear operation, as well as in way of hawser holes or fairleads provided for mooring or towing.

2.1.5

Openings in bulwarks are to be arranged so that the protection of the crew is to be at least equivalent to that provided by the horizontal courses in [3.1.2].

For this purpose, vertical rails or bars spaced approximately 230 mm apart may be accepted in lieu of rails or bars arranged horizontally.

2.1.6

In the case of ships intended for the carriage of timber deck cargoes, the specific provisions of the freeboard regulations are to be complied with.

2.1.7

Where mooring fittings subject the bulwark to large forces, the stays are to be adequately strengthened.

2.2 Construction of bulwarks

2.2.1 Plating

The gross thickness of bulwark plating, at the boundaries of exposed freeboard and superstructure decks, is not to be less than that given in Table 1.

Table 1 : Thickness of bulwark plates

Height of bulwark	Gross thickness
1.8 m or more	Thickness required for a superstructure side in the same position, obtained from Ch 11, Sec 1, [3.2.1], but not to be less than 6.5 mm
1.0 m	6.5 mm
Intermediate height	To be determined by linear interpolation

2.2.2 Stays

The gross section modulus of stays, $Z_{stay\text{-}gr}$, in cm^3, is not to be less than:

$$Z_{stay-gr} = 77\ h_{blwk}^{\ 2}\ s_{stay}$$

where:

h_{blwk} : Height of bulwark from the top of the deck plating to the top of the rail, in m.

s_{stay} : Spacing of the stays, in m.

In the calculation of the section modulus, only the material connected to the deck is to be included. The bulb or flange of the stay may be taken into account where connected to the deck. Where the bulwark plating is connected to the sheer strake, a width of attached plating, not exceeding 600 mm, may also be included.

2.2.3

Where bulwarks are cut completely, stays or plate brackets of increased strength are to be fitted at the ends of openings.

Bulwark stays are to be supported by, or are to be in line with, suitable under deck stiffening. The stiffening is to be connected by double continuous fillet welds in way of bulwark stay connections.

2.2.4

At the ends of superstructures and for the distance over which their side plating is tapered into the bulwark, the latter is to have the same thickness as the side plating. Where openings are cut in the bulwark at these positions, adequate compensation is to be provided either by increasing the thickness of the plating or by other suitable means.

3 GUARD RAILS

3.1 General

3.1.1

Where superstructures are connected by trunks, open rails are to be fitted for the whole length of the exposed parts of the freeboard deck.

3.1.2

In Type B-100 and Type A ships, open rails on the weather parts of the freeboard deck for at least half the length of the exposed parts are to be fitted.

Alternatively, freeing ports complying with ICLL are to be fitted.

3.2 Construction of guard rails

3.2.1

Stanchions of guard rails are to comply with the following requirements:

a) Fixed, removable or hinged stanchions are to be fitted approximately 1.5 m apart.

b) At least every third stanchion is to be supported by a bracket or stay.

c) Removable or hinged stanchions are to be capable of being locked in the upright position.

d) In the case of ships with rounded sheer strake, the stanchions are to be placed on the flat of the deck.

e) In the case of ships with welded sheer strake, the stanchions are not to be attached to the sheer strake, upstand or a continuous gutter bar.

3.2.2

The size of openings, below the lowest course of rails and the deck or upstand, is to be a maximum of 230 mm. The distance between other courses is not to be greater than 380 mm.

3.2.3

Wire ropes may be accepted, in lieu of guard rails, only in special circumstances and then only in limited lengths. In such cases, they are to be made taut by means of turnbuckles.

3.2.4

Chains may be accepted, in lieu of guard rails, only where they are fitted between two fixed stanchions and/or bulwarks. if the opening is wide, the chains are to be fitted with vertical courses to prevent the horizontal courses from spreading apart.

SECTION 3
EQUIPMENT

SYMBOLS

For symbols not defined in this section, refer to Ch 1, Sec 4.

1 GENERAL

1.1 Application

1.1.1

The anchoring equipment specified in this section is intended for temporary mooring of a ship within a harbour or sheltered area when the ship is awaiting berth, tide, etc.

1.1.2

The equipment specified is not intended to be adequate to hold a ship off fully exposed coasts in rough weather or to stop a ship that is moving or drifting. In such a condition, the loads on the anchoring equipment increase to such a degree that its components may be damaged or lost.

1.1.3

The Equipment Number (*EN*) formula for the required anchoring equipment is based on an assumed maximum current speed of 2.5 m/s, maximum wind speed of 25 m/s and a minimum scope of chain cable of 6, the scope of chain cable being the ratio between the length of chain paid out and the waters depth. For ships with length greater than 135 m, alternatively the required anchoring equipment can be considered applicable to a maximum current speed of 1.54 m/s, a maximum wind speed of 11 m/s and waves with maximum significant height of 2 m.

It is assumed that under normal circumstances a ship uses only one bow anchor and chain cable at a time.

2 EQUIPMENT NUMBER CALCULATION

2.1 Requirements

2.1.1

Anchors and chains are to be in accordance with Table 1 and the quantity, mass and sizes of these are to be determined by the equipment number (EN), given by:

$$EN = \Delta^{2/3} + 2\ B\ h + 0.1\ A$$

where:

h : Effective height, in m, from the summer load waterline to the top of the uppermost house, to be obtained in accordance with the following formula:

$h = h_{FB} + \Sigma h_n$

When calculating *h*, sheer and trim are to be disregarded. For the lowest tier h is to be measured at centreline from the upper deck or from a notional deck line where there is local discontinuity in the upper deck, as shown in Figure 1.

h_{FB} : Freeboard amidships from the summer load waterline to the upper deck, in m.

h_n : Height, in m, at the centreline of superstructure or of deckhouse tier '*n*' having a breadth greater than *B*/4. Where a house having a breadth greater than *B*/4 is above a house with a breadth of *B*/4 or less, the upper house is to be included and the lower ignored.

A : Side projected area, in m^2, of the parts of the hull, superstructures and houses above the summer load waterline which are within the length *L* and also have a breadth greater than *B*/4.

Fixed screens or bulwarks 1.5 m or more in height are to be regarded as parts of houses when determining *h* and *A*. In particular, the hatched area shown in Figure 2 is to be included.

The height of hatch coamings and that of any deck cargo, such as containers, may be disregarded when determining *h* and *A*.

2.1.2

For ships with *EN* greater than 16000, the determination of the equipment will be considered by the Society on a case-by-case basis.

Figure 1 : Measurement of heights

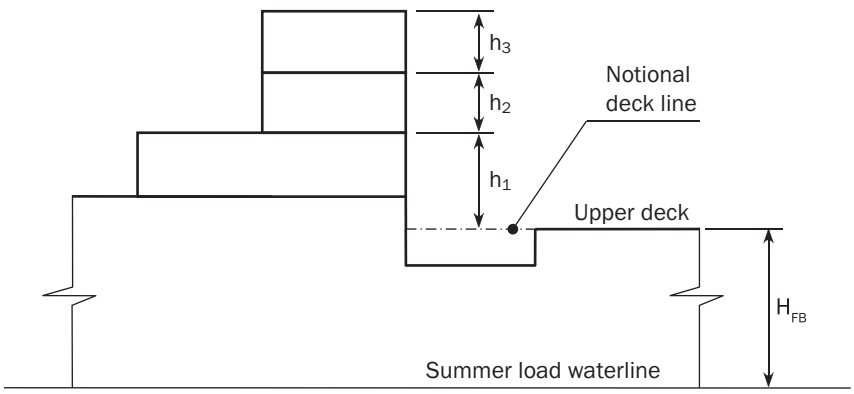

Figure 2 : Profile areas of screens and bulwarks

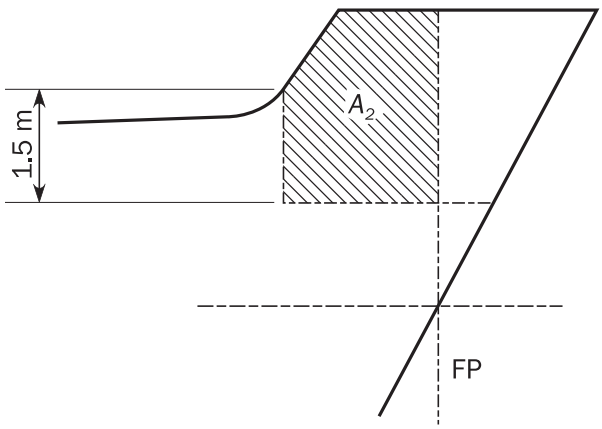

Table 1 : Equipment - Bower anchors and chain cables

Equipment Number		Stockless bower anchors		Chain cable stud link bower chain			
					Diameter, in mm		
Greater than	Equal to or less than	Number of anchors (1)	Mass per anchor, in kg	Length, in m	Normal strength steel (Grade 1)	High strength steel (Grade 2)	Extra high strength steel (Grade 3)
150	175	2	480	275	22	19	*
175	205	2	570	302.5	24	20.5	*
205	240	2	660	302.5	26	22	20.5
240	280	2	780	330	28	24	22
280	320	2	900	357.5	30	26	24
320	360	2	1020	357.5	32	28	24
360	400	2	1140	385	34	30	26
400	450	2	1290	385	36	32	28
450	500	2	1440	412.5	38	34	30
500	550	2	1590	412.5	40	34	30
550	600	2	1740	440	42	36	32
600	660	2	1920	440	44	38	34
660	720	2	2100	440	46	40	36
720	780	2	2280	467.5	48	42	36
780	840	2	2460	467.5	50	44	38
840	910	2	2640	467.5	52	46	40
910	980	2	2850	495	54	48	42
980	1060	2	3060	495	56	50	44
1060	1140	2	3300	495	58	50	46
1140	1220	2	3540	522.5	60	52	46
1220	1300	2	3780	522.5	62	54	48
1300	1390	2	4050	522.5	64	56	50
1390	1480	2	4320	550	66	58	50
1480	1570	2	4590	550	68	60	52
1570	1670	2	4890	550	70	62	54
1670	1790	2	5250	577.5	73	64	56
1790	1930	2	5610	577.5	76	66	58
1930	2080	2	6000	577.5	78	68	60
2080	2230	2	6450	605	81	70	62
2230	2380	2	6900	605	84	73	64
2380	2530	2	7350	605	87	76	66
2530	2700	2	7800	632.5	90	78	68
2700	2870	2	8300	632.5	92	81	70
2870	3040	2	8700	632.5	95	84	73
3040	3210	2	9300	660	97	84	76
3210	3400	2	9900	660	100	87	78

(1) Spare anchors are not included in the number of required anchors.

Note 1: '*' chain grade not to be used at this diameter.

Equipment Number		Stockless bower anchors		Chain cable stud link bower chain			
					Diameter, in mm		
Greater than	Equal to or less than	Number of anchors (1)	Mass per anchor, in kg	Length, in m	Normal strength steel (Grade 1)	High strength steel (Grade 2)	Extra high strength steel (Grade 3)
3400	3600	2	10500	660	102	90	78
3600	3800	2	11100	687.5	105	92	81
3800	4000	2	11700	687.5	107	95	84
4000	4200	2	12300	687.5	111	97	87
4200	4400	2	12900	715	114	100	87
4400	4600	2	13500	715	117	102	90
4600	4800	2	14100	715	120	105	92
4800	5000	2	14700	742.5	122	107	95
5000	5200	2	15400	742.5	124	111	97
5200	5500	2	16100	742.5	127	111	97
5500	5800	2	16900	742.5	130	114	100
5800	6100	2	17800	742.5	132	117	102
6100	6500	2	18800	742.5	*	120	107
6500	6900	2	20000	770	*	124	111
6900	7400	2	21500	770	*	127	114
7400	7900	2	23000	770	*	132	117
7900	8400	2	24500	770	*	137	122
8400	8900	2	26000	770	*	142	127
8900	9400	2	27500	770	*	147	132
9400	10000	2	29000	770	*	152	132
10000	10700	2	31000	770	*	*	137
10700	11500	2	33000	770	*	*	142
11500	12400	2	35500	770	*	*	147
12400	13400	2	38500	770	*	*	152
13400	14600	2	42000	770	*	*	157
14600	16000	2	46000	770	*	*	162

(1) Spare anchors are not included in the number of required anchors.
Note 1: '*' chain grade not to be used at this diameter.

3 ANCHORING EQUIPMENT

3.1 General

3.1.1 General

Two bower anchors are to be connected to chain cable and stowed in position ready for use.

3.1.2 Design

The anchors are to be of an approved type and satisfy the testing conditions as per the Society's requirements.

3.2 Ordinary anchors

3.2.1 Anchor mass

The mass per anchor of bower anchors given in Table 1 is for anchors of equal mass. The mass of individual anchors may vary 7% above or below the tabulated value, provided that the combined mass of all anchors is not less than that required for anchors of equal mass.

Anchors are to be of the stockless type. The mass of the head of anchor, including pins and fittings, is not to be less than 60% of the total mass of the anchor.

3.3 High Holding power anchors

3.3.1 General

Where agreed by the owner, consideration will be given to the use of special types of anchors. High Holding Power (HHP), i.e. anchors for which a holding power higher at least twice that of ordinary anchors has been proved according to the applicable requirements of the Society's Rules for Materials, do not require prior adjustment or special placement on the sea bottom.

3.3.2 HHP anchor mass

Where HHP anchors are used as bower anchors, the mass of each anchor is to be not less than 75% of the mass required for ordinary stockless anchors in Table 1.

3.3.3 Application

High holding power anchors are to be of a design that will ensure that the anchors will take effective hold of the sea bed without undue delay and will remain stable, for holding forces up to those required by the Society, irrespective of the angle or position at which they first settle on the sea bed when dropped from a normal type of hawse pipe. A demonstration of these abilities may be required.

The design approval of high holding power anchors may be given as a general/type approval, and listed in a published document by the Society.

3.4 Chain cables

3.4.1 General

The chain cables are classified as Grade 1, 2 or 3 depending on the type of steel used and its manufacture.

The characteristics of the steel used and the method of manufacture of chain cables are to be approved by the Society for each manufacturer. The material from which chain cables are manufactured and the completed chain cables themselves are to be tested in accordance with the applicable requirements of the Society's Rules for Materials.

Chain cables which are intended to form part of the equipment are not to be used as check chains when the ship is launched.

3.4.2 Application

The total length of chain required to be carried onboard, as given in Table 1, is to be divided approximately equally between the two anchors.

Where the owner requires equipment for anchoring at depths greater than 82.5 m, it is the owner's responsibility to specify the appropriate total length of the chain cable required. In such a case, consideration can be given to dividing the chain cable into two unequal lengths.

3.5 Chain lockers and stowed anchors

3.5.1 General

The chain locker is to have adequate capacity and be of a suitable form to provide for the proper stowage of the chain cable, allowing an easy direct lead for the cable into the chain pipes when the cable is fully stowed. Port and starboard cables are to have separate spaces.

The chain locker boundaries and access openings are to be watertight. Provisions are to be made to minimise the probability of the chain locker being flooded in bad weather. Adequate drainage facilities for the chain locker are to be provided.

Chain or spurling pipes are to be of suitable size and provided with chafing lips.

3.5.2 Securing of the inboard ends of chain cables

Provisions are to be made for securing the inboard ends of the chain to the structure. This attachment and its supporting structure are to be able to withstand a force of not less than 15% or more than 30% of the minimum breaking strength of the fitted chain cable.

The fastening of the chain to the ship is to be arranged in such a way that in case of an emergency, when the anchor and chain have to be sacrificed, the chain can be readily released from an accessible position outside the chain locker.

3.5.3 Securing of stowed anchors

Anchor lashings are to be designed to resist a load at least corresponding to twice the anchor mass plus 10 m of cable without exceeding 40% of the yield strength of the lashing material.

3.6 Chain stoppers

3.6.1 General

Chain stoppers are to be provided to secure each chain cable once it is paid out.

3.6.2 Application

Securing arrangements of chain stoppers are to be capable of withstanding a load equal to 80% of the breaking load of the chain cable as required by [3.4.1], without undergoing permanent deformation.

3.7 Windlass

3.7.1 General

A windlass of sufficient power and suitable for the size of chain is to be fitted to the ship in accordance with the requirements of the Society. Where an owner requires equipment significantly in excess of Rule requirements, it is the owner's responsibility to specify increased windlass power.

The windlass is to be capable of heaving in either cable.

3.7.2 Application

The design of the windlass is to be such that access to the chain pipe is adequate to permit the fitting of a cover or seal of sufficient strength over the spurling pipe.

Special consideration will be given to the acceptance of equivalent arrangements that minimise the probability of the chain locker or forecastle being flooded.

3.7.3 Anchor windlass trial

Each windlass is to be tested under working conditions after installation onboard to demonstrate satisfactory operation. Each unit is to be independently tested for the following:

a) Braking.

b) Clutch functioning.

c) Lowering and hoisting of chain cable and anchor.

d) Proper riding of the chain over the chain lifter.

e) Proper transit of the chain through the hawse pipe and the chain pipe.

f) Effecting proper stowage of the chain and the anchor.

During trials onboard ship, the windlass is to be shown to:

a) For all specified design anchorage depths, raise the anchor from a depth of 82.5 m to a depth of 27.5 m at a mean speed of 9 m/min.

b) For specified design anchorage depths greater than 82.5 m, in addition to (a), raise the anchor from the specified design anchorage depth to a depth of 82.5 m at a mean speed of 3 m/min.

c) Where the depth of the water in the trial area is inadequate, suitable equivalent simulating conditions will be considered as an alternative.

3.8 Hawse pipes

3.8.1 General

Hawse pipes are to be of a suitable size and configuration to ensure adequate clearance and an easy lead of the chain cable from the chain stopper through the ship's side.

Hawse pipes are to be of sufficient strength.

Their position and slope are to be so arranged as to create an easy lead for the chain cables and efficient housing for the anchors, where the latter are of the retractable type, avoiding damage to the hull during these operations.

For this purpose, chafing lips of suitable form with ample lay-up and radius adequate to the size of the chain cable are to be provided at the shell and deck. The shell plating in way of the hawse pipes is to be reinforced as necessary.

Where hawse pipes are not fitted, alternative arrangements will be specially considered.

3.8.2 Application

Hawse pipes are to be securely attached to thick, doubling or insert plates, by continuous welds.

3.8.3 Stowage and deployment arrangements for anchors

Hawse pipes and anchor pockets are to have full-rounded flanges or rubbing bars in order to minimise the nip on the cables and to minimise the probability of cable links being subjected to high bending stresses. The radius of curvature is to be such that at least three links of chain will bear simultaneously on the rounded parts of the upper and lower ends of the hawse pipes in those areas where the chain cable is supported during paying out and hoisting and when the ship is at anchor.

On ships provided with a bulbous bow, where it is not possible to obtain a suitable clearance between shell plating and the anchors during anchor handling, local reinforcements of the bulbous bow are to be provided in the form of increased shell plate thickness.

3.9 Towlines and mooring line

3.9.1 General

Mooring lines and towlines are not required as a condition of Classification.

The designer is to provide the following information:

- Towing line:

    - Length, in m,
    - Breaking strength, in kN.
- Mooring lines:
    - Number,
    - Length of each, in m,
    - Breaking strength, in kN.

Side projected area including that of deck cargoes as given by the loading manual is to be taken into account for selection of towing/mooring lines.

SECTION 4
SUPPORTING STRUCTURE FOR DECK EQUIPMENT AND FITTINGS

SYMBOLS

For symbols not defined in this section, refer to Ch 1, Sec 4.

SWL : Safe working load as defined in [4.1.4].

Normal stress: The sum of bending stress and axial stress with the corresponding shearing stress acting perpendicular to the normal stress.

1 GENERAL

1.1 Application

1.1.1

Information pertaining to the supporting structure for deck equipment and fittings, as listed in this section, is to be submitted for approval.

This section includes scantling requirements to the supporting structure and foundations of the following pieces of equipment and fittings:

a) Anchor windlasses.

b) Anchoring chain stoppers.

c) Mooring winches.

d) Deck cranes, derricks and lifting masts.

e) Bollards and bitts, fairleads, stand rollers, chocks and capstans.

1.1.2

Where deck equipment is subject to multiple load cases, such as operational loads and green sea load, the loads are be applied independently for the evaluation of strength of foundations and support structure.

1.2 Documents to be submitted

1.2.1

The documents to be submitted are indicated in Ch 1, Sec 3.

2 ANCHORING WINDLASS AND CHAIN STOPPER

2.1 General

2.1.1

The windlass is to be efficiently bedded and secured to the deck.

2.1.2

The builder and the windlass manufacturer are to ensured that the foundation is suitable for the safe operation and maintenance of the windlass equipment.

2.1.3

The supporting structure is to be dimensioned to ensure that for each of the load scenarios specified in [2.1.5] and [2.1.6], the stresses do not exceed the permissible values given in [2.1.12] to [2.1.15].

2.1.4

These requirements are to be assessed based on net scantlings.

2.1.5

The following load cases are to be examined for the anchoring operation, as appropriate:

a) Windlass where chain stoppers are fitted but not attached to the windlass: 45% of *BS*.

b) Windlass where no chain stopper is fitted or the chain stopper is attached to the windlass: 80% of *BS*.

c) Chain stopper: 80% of *BS*.

where:

BS : Minimum breaking strength of the chain cable.

2.1.6

The following forces are to be applied in the independent load cases that are to be examined for the design loads due to green sea over the forward 0.25 *L*, see Figure 1:

$P_x = 200\ A_x$, in kN, acting normal to the shaft axis.

$P_y = 150\ A_y\ f$, in kN, acting parallel to the shaft axis (inboard and outboard directions to be examined separately).

where:

A_x : Projected frontal area, in m^2.

A_y : Projected side area, in m^2.

f : Coefficient taken as:

$f = 1 + B_w/H$, but not to be taken greater than 2.5.

B_W : Breadth of windlass measured parallel to the shaft axis, in m, see Figure 1.

H : Overall height of windlass, in m, see Figure 1.

2.1.7

Forces resulting from green sea design loads in the bolts, chocks and stoppers securing the windlass to the deck are to be calculated. The windlass is supported by a number of bolt groups, *N*, each containing one or more bolts. See Figure 2.

Figure 1 : Directions of forces and weight

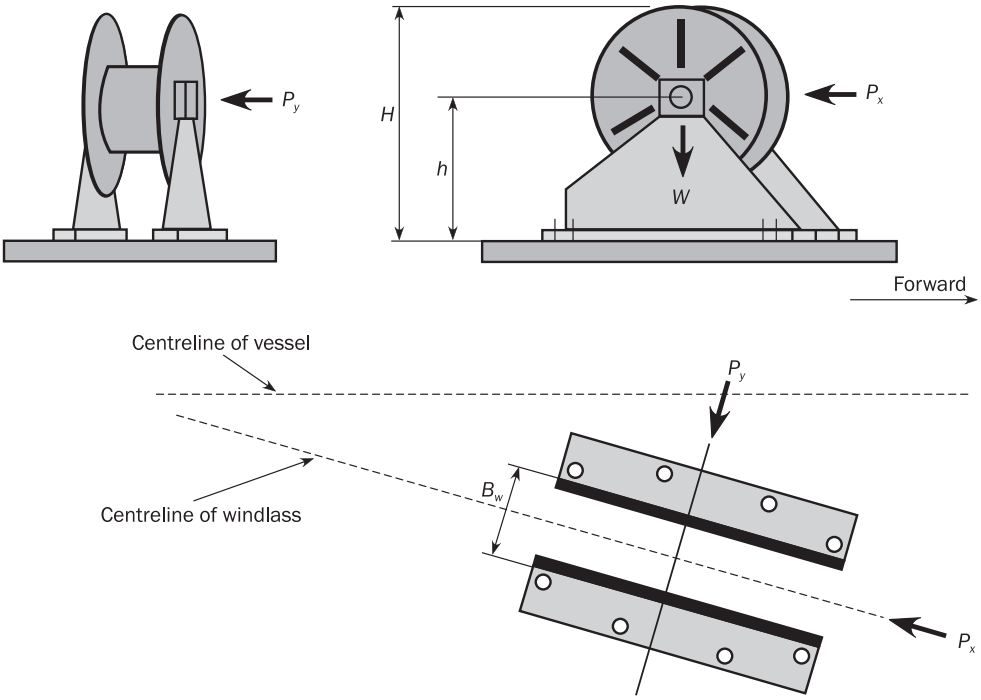

Figure 2 : Bolting arrangements and sign conventions

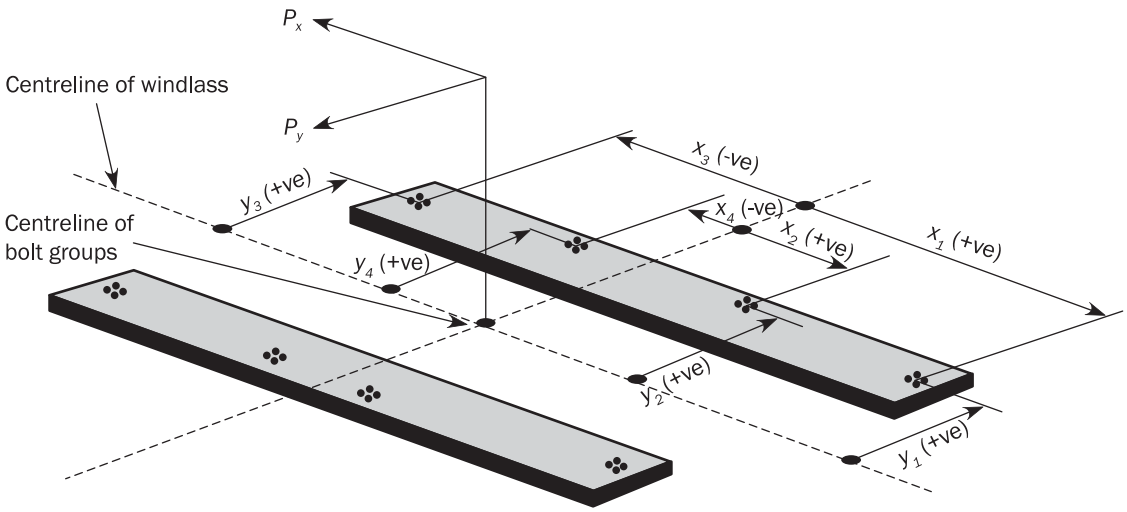

2.1.8

The axial forces, R_{xi} and R_{yi}, in bolt group (or bolt) i, positive in tension, are given by:

$$R_{xi} = P_x\, h\, x_i\, A_i / I_x$$

$$R_{yi} = P_y\, h\, y_i\, A_i / I_y$$

$$R_i = R_{xi} + R_{yi} - R_{si}$$

where:

P_x : Force acting normal to the shaft axis, in kN.

P_y : Force acting parallel to the shaft axis, either inboard or outboard, whichever gives the greater force in bolt group i, in kN.

h : Shaft centre height above the windlass mounting, in cm, see Figure 1.

x_i, y : x and y coordinates of bolt group i from the centroid of all N bolt groups, in cm. Positive in the direction opposite to that of the applied force.

A_i : Cross sectional area of all bolts in group i, in cm^2.

I_x : Inertia in x direction for N bolt groups, in cm^4, taken as:

$I_x = \Sigma A_i x_i^2$

I_y : Inertia in y direction for N bolt groups, in cm^4, taken as:

$I_y = \Sigma A_i y_i^2$

R_{si} : Static reaction at bolt group i, due to the weight of windlass, in kN.

2.1.9

The shear forces, F_{xi} and F_{yi}, applied to the bolt group i, and the resultant combined force F_i, are given by:

$$F_{xi} = (P_x - C_1\ mg)/N$$

$$F_{yi} = (P_y - C_1\ mg)/N$$

$$F_i = \sqrt{F_{xi}^2 + F_{yi}^2}$$

where:

C_1 : Coefficient of friction, taken equal to 0.5.

m : Mass of windlass, in t.

g : Acceleration due to gravity, taken equal to 9.81 m/s^2.

N : Number of bolt groups.

2.1.10

The resultant forces from the application of the loads specified in [2.1.5] and [2.1.6] are to be considered in the design of the supporting structure.

2.1.11

Where a separate foundation is provided for the windlass brake, the distribution of resultant forces is to be calculated on the assumption that the brake is applied for load cases (a) and (b) defined in [2.1.5].

2.1.12

The stresses resulting from anchoring design loads induced in the supporting structure are not to be greater than the following permissible values:

- Normal stress, 1.00 R_{eH}
- Shear stress, 0.6 R_{eH}

2.1.13

The tensile axial stresses resulting from green sea design loads in the individual bolts in each bolt group i are not to exceed 50% of the bolt proof strength. The load is to be applied in the direction of the chain cable. Where fitted bolts are designed to support shear forces in one or both directions, the von Mises equivalent stresses are not to exceed 50% of the bolt proof strength.

2.1.14

The horizontal forces resulting from the green sea design loads, F_{xi} and F_{yi} may be supported by shear chocks. Where pourable resins are incorporated in the holding down arrangements, due account is to be taken in the calculation.

2.1.15

The stresses resulting from green sea design loads induced in the supporting structure are not to be greater than the following permissible values:

- Normal stress, 1.00 R_{eH}.
- Shear stress, 0.6 R_{eH}.

3 MOORING WINCHES

3.1 General

3.1.1

Mooring winches are to be efficiently bedded and secured to the deck.

3.1.2 Foundation

The builder and mooring winch manufacturer are to ensured that the foundation is suitable for the safe operation and maintenance of the mooring winch equipment.

3.1.3 Rated pull

The Rated Pull is defined as the maximum load which the mooring winch is designed to exert during operation.

3.1.4 Holding load

The Holding Load is defined as the maximum load which the mooring winch is designed to resist during operation and is to be taken as the design brake holding load or equivalent.

3.1.5 Supporting structure

The supporting structure is to be dimensioned to ensure that for each of the load cases specified in [3.1.7], the stresses do not exceed the permissible values given in [2.1.12].

For mooring winches situated within the forward 0.25 L, the supporting structure is to be dimensioned to ensure that for the load case specified in [2.1.6], the stresses do not exceed the permissible values given in [2.1.13] to [2.1.15].

3.1.6 Corrosion model

These requirements are to be assessed based on net scantlings.

3.1.7

Each of the following load cases are to be examined for design loads due to mooring operation:

a) Mooring winch at maximum pull: 100% of the Rated Pull.

b) Mooring winch with brake effective: 100% of the Holding Load.

c) Line strength: 125% of the breaking strength of the mooring line provided by the designer (refer to Ch 11, Sec 3, [3.9]).

Rated pull and holding load are defined in [3.1.3] and [3.1.4]. The design load is to be applied through the mooring line according to the arrangement shown on the mooring arrangement plan.

3.1.8

For mooring winches situated within the forward 0.25 *L*, the resultant forces in the bolts obtained from green sea design loads are to be calculated in accordance with [2.1.6] to [2.1.9].

3.1.9

Where a separate foundation is provided for the mooring winch brake, the distribution of resultant forces is to take into account of the different load path. The brake is only to be considered in relation to the forces in [3.1.7] item (b).

4 CRANES, DERRICKS, LIFTING MASTS AND LIFE SAVING APPLIANCES

4.1 General

4.1.1

Supporting structure of life saving appliances and supporting structures of cranes, derricks and lifting masts with a Safe Working Load greater than 30 kN, or a maximum overturning moment to the supporting structure greater than 100 kNm, are to comply with these requirements.

4.1.2

These requirements apply to the connection to the deck and the supporting structure of cranes, derricks and lifting masts. Where the crane, derrick or lifting mast is to be certified by the Society, additional requirements may be applied by the Society.

4.1.3

These requirements do not cover the following items:

a) Supports of lifting appliances for personnel or passengers, except foundation for life saving appliances.

b) The structure of the lifting appliance pedestals or post above the area of the deck connection.

c) Holding down bolts and their arrangement, which are considered part of the lifting appliance.

The term 'lifting appliance' is defined as a crane, derrick or lifting mast.

4.1.4 SWL Definition

The Safe Working Load (SWL) is defined as the maximum load which the lifting appliance is certified to lift at any specified outreach.

4.1.5 Self weight

The self weight is the calculated gross self weight of the lifting appliance, including the weight of any lifting gear.

4.1.6 Overturning moment

The overturning moment is the maximum bending moment, calculated at the connection of the lifting appliance to the ship structure, due to the lifting appliance operating at Safe Working Load, taking into account outreach and self weight.

4.1.7

The crane pedestal and derrick mast are as defined in Figure 3.

Figure 3 : Crane pedestal and derrick mast

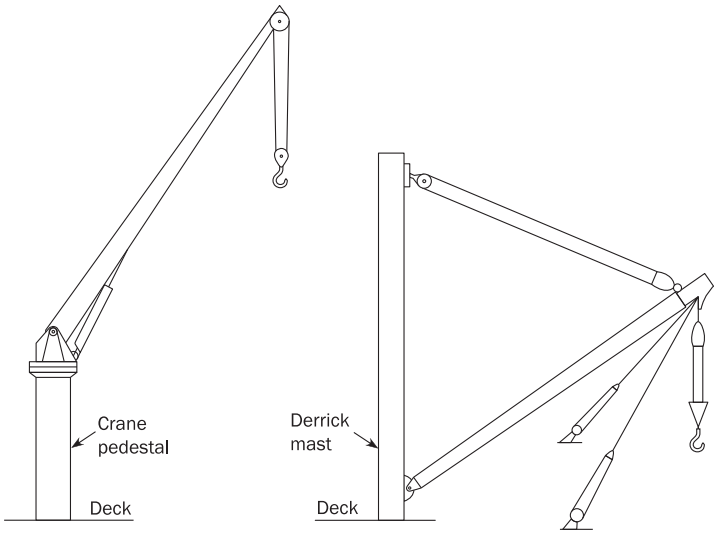

4.1.8

Deck plating and under deck structure is to provide adequate support for derrick masts and crane pedestals against the loads and maximum overturning moment. Where the deck is penetrated, the deck plating is to be suitably strengthened.

4.1.9

Structural continuity of the deck structure is to be maintained.

Under deck members are to be provided to support the crane pedestal and to comply with:

a) Where the pedestal is directly connected to the deck, without above deck brackets, adequate under deck structure directly in line with the crane pedestal is to be provided. Where the crane pedestal is attached to the deck without bracketing or where the crane pedestal is not continuous through the deck, welding to the deck of the crane pedestal and its under deck support structure is to be made by suitable full penetration welding. The design of the weld connection is to be adequate for the calculated stress in the welded connection, in accordance with [4.1.15].

b) Where the pedestal is directly connected to the deck with brackets, under deck support structure is to be fitted to ensure a satisfactory transmission of the load, and to avoid structural hard spots. Above deck brackets may be fitted inside or outside of the pedestal and are to be aligned with deck girders and webs. The design is to avoid stress concentrations caused by an abrupt change of section. Brackets and other direct load carrying structure and under deck support structure are to be welded to the deck by suitable full penetration welding. The design of the connection is to be adequate for the calculated stress, in accordance with [4.1.15].

4.1.10

Deck plating are to be of a material strength compatible with the crane pedestal. Where necessary, a thicker insert plate is to be fitted. In no case are doublers to be used where structures are subject to tension.

4.1.11

The supporting structure is to be dimensioned to ensure that for the load cases specified in [4.1.13] and [4.1.14], the stresses do not exceed those given in [4.1.15].

The capability of the supporting structure to resist buckling failure is to be assured.

4.1.12

These requirements are to be assessed based on gross scantlings.

4.1.13

For lifting appliances which are limited to use in harbour, design load is to be taken equal to 1.3 times SWL added to the lifting appliances self weight.

4.1.14

For life saving appliances, design load is to be taken as 2.2 times SWL.

4.1.15

The stresses induced in the supporting structure are not to exceed the following permissible values:

- Normal stress, 0.67 R_{eH}
- Shear stress, 0.39 R_{eH}

5 BOLLARDS AND BITTS, FAIRLEADS, STAND ROLLERS, CHOCKS AND CAPSTANS

5.1 General

5.1.1

Article [5] provides requirements applicable to the design and construction of shipboard fittings and supporting structures used for the normal towing at bow, side and stern and mooring operations as well as the strength of supporting structures of winches and capstans.

Normal towing means towing operations necessary for manoeuvring in ports and sheltered waters associated with the normal operations of the ship.

Where a ship is equipped with shipboard fittings intended to be used for other towing services, the strength of these fittings and their supporting structures are to comply with the requirements of this Article.

5.1.2

Article [5] is not applicable to design and construction of shipboard fittings and supporting structures used for special towing services defined as:

a) Escort towing: Towing service, in particular, for laden oil tankers required in specific estuaries. Its main purpose is to control the ship in case of failures of the propulsion or steering system. It should be referred to local escort requirements and guidance given by, e.g., the Oil Companies International Marine Forum (OCIMF).

b) Canal transit towing: Towing service for ships transiting, e.g. the Panama Canal. It should be refereed to local canal transit requirements.

c) Emergency towing for oil tankers: Towing service to assist tankers in case of emergency. For the emergency towing arrangements, ships subject to SOLAS regulation II-1/3-4 Paragraph 1 are to comply with that regulation and resolution MSC.35(63) as may be amended.

5.1.3

Where fairleads are fitted in bulwarks, the thickness of bulwarks may need to be increased. See Ch 11, Sec 2, [2.2].

5.1.4

The supporting structure is to be dimensioned to ensure that for the loads specified in [5.2.1] and [5.3.1], the stresses do not exceed the permissible values given in [5.5].

The capability of the structure to resist buckling failure is to be assured according to Ch 8.

5.1.5

These requirements are to be assessed based on net scantlings.

5.2 Towing

5.2.1 Towing design loads

The minimum design load applied to supporting structures for shipboard fittings is not to be less than the following values:

a) For normal towing operations, 125% of the intended maximum towing load (static bollard pull) as indicated on the towing and mooring arrangements plan,

b) For other towing service, the minimum breaking strength of the tow line provided by the designer (refer to Ch 11, Sec 3, [3.9]),

c) For fittings intended to be used for, both, normal and other towing operations, the greater of the design loads according to a) and b).

When a safe towing load, *TOW*, greater than the value determined according to [5.2.4] is provided by the designer, the design load is to be increased in accordance with the appropriate *TOW*/design load relationship given in [5.2.1] and [5.2.4].

The design load is to be applied to fittings in all directions that may occur by taking into account the arrangement shown on the towing and mooring arrangements plan. Where the towing line takes a turn at a fitting the total design load applied to the fitting is equal to the resultant of the design loads acting on the line (see Figure 4). However, the design load applied to the fitting needs not to be greater than twice the design load of the line.

Figure 4 : Design load on fitting

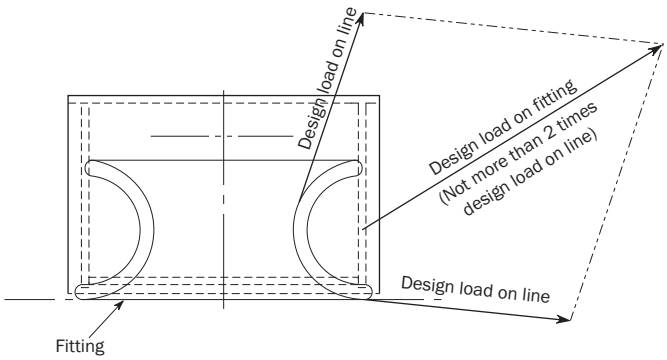

5.2.2 Shipboard fittings

Shipboard fittings may be selected from an industry standard accepted by the Society and at least based on the following loads.

a) For normal towing operations, the intended maximum towing load (static bollard pull) as indicated on the towing and mooring arrangements plan,

b) For other towing service, the minimum breaking strength of the tow line provided by the designer (refer to Ch 11, Sec 3, [3.9]),

c) For fittings intended to be used for, both, normal and other towing operations, the greater of the loads according to a) and b).

Towing bitts (double bollards) may be chosen for the towing line attached with eye splice if the industry standard distinguishes between different methods to attach the line, i.e. figure-of-eight or eye splice attachment.

When the shipboard fitting is not selected from an accepted industry standard, the strength of the fitting and of its attachment to the ship is to be in accordance with the requirements of this Article.

Towing bitts (double bollards) are required to resist the loads caused by the towing line attached with eye splice.

5.2.3 Towing force acting point

The acting point of the towing force on shipboard fittings is to be taken at the attachment point of a towing line or at a change in its direction. For bollards and bitts the attachment point of the towing line is to be taken not less than 4/5 of the tube height above the base (see Figure 5).

Figure 5 : Attachment point of the towing line

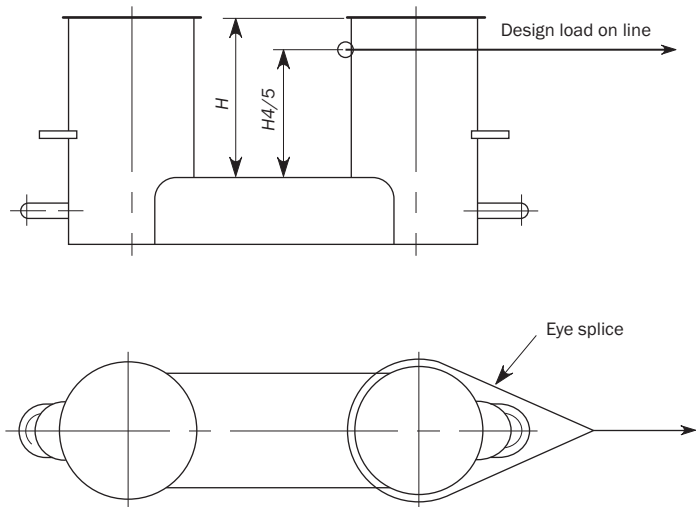

5.2.4 Safe towing load (*TOW*)

The Safe Towing Load (*TOW*), in t, is the load limit for towing purpose.

The following requirements for Safe Towing Load (*TOW*) apply for the use with no more than one line. If not otherwise chosen, for towing bitts (double bollards) *TOW* is the load limit for a towing line attached with eye-splice.

a) *TOW* used for normal towing operations is not to exceed 80% of the design load given in [5.2.1] a).

b) *TOW* used for other towing operations is not to exceed 80% of the design load given in [5.2.1] b).

c) For fittings used for both normal and other towing operations, the greater of the safe towing loads in a) and b) above is to be used.

d) For fittings intended to be used for, both, towing and mooring, [5.3] applies to mooring.

TOW of each shipboard fitting is to be marked by weld bead or equivalent, on the deck fittings used for towing.

For fittings intended to be used for, both, towing and mooring, *SWL*, in t, according to [5.3.4] is to be marked in addition to *TOW*.

5.3 Mooring

5.3.1 Mooring design loads

The minimum design load applied to supporting structures for shipboard fittings is not to be less than 115% of the minimum breaking strength of the mooring line provided by the designer (refer to Ch 11, Sec 3, [3.9]).

The minimum design load applied to supporting structures for winches is not to be less than 125% of the intended maximum brake holding load, where the maximum brake holding load is to be assumed not less than 80% of the minimum breaking strength of the mooring line provided by the designer (refer to Ch 11, Sec 3, [3.9]).

The minimum design load for the supporting structure for capstans is to taken as 125% of the maximum hauling in force.

When a safe working load *SWL* greater than the value determined according to [5.3.4] is provided by the designer, the design load is to be multiplied by the ratio *SWL*/design load, where the design load is given above as appropriate.

The design load is to be applied to fittings in all directions that may occur by taking into account the arrangement shown on the towing and mooring arrangements plan. Where the mooring line takes a turn at a fitting the total design load applied to the fitting is equal to the resultant of the design loads acting on the line (See Figure 4). However, the design load applied to the fitting needs not to be greater than twice the design load on the line.

5.3.2 Shipboard fittings

Shipboard fittings may be selected from an industry standard accepted by the Society and at least based on the minimum breaking strength of the mooring line provided by the designer (refer to Ch 11, Sec 3, [3.9]).

Mooring bitts (double bollards) are to be chosen for the mooring line attached in figure-of-eight fashion if the industry standard distinguishes between different methods to attach the line, i.e. figure-of-eight or eye splice attachment.

When the shipboard fitting is not selected from an accepted industry standard, the strength of the fitting and of its attachment to the ship is to be in accordance with this Article.

Mooring bitts (double bollards) are required to resist the loads caused by the mooring line attached in figure-of-eight fashion.

5.3.3 Mooring force acting point

The acting point of the mooring force on shipboard fittings is to be taken at the attachment point of a mooring line or at a change in its direction. For bollards and bitts the attachment point of the mooring line is to be taken not less than 4/5 of the tube height above the base (See Figure 6 a)). However, if fins are fitted to the bollard tubes to keep the mooring line as low as possible, the attachment point of the mooring line may be taken at the location of the fins (See Figure 6 b)).

Figure 6 : Attachment point of the mooring line

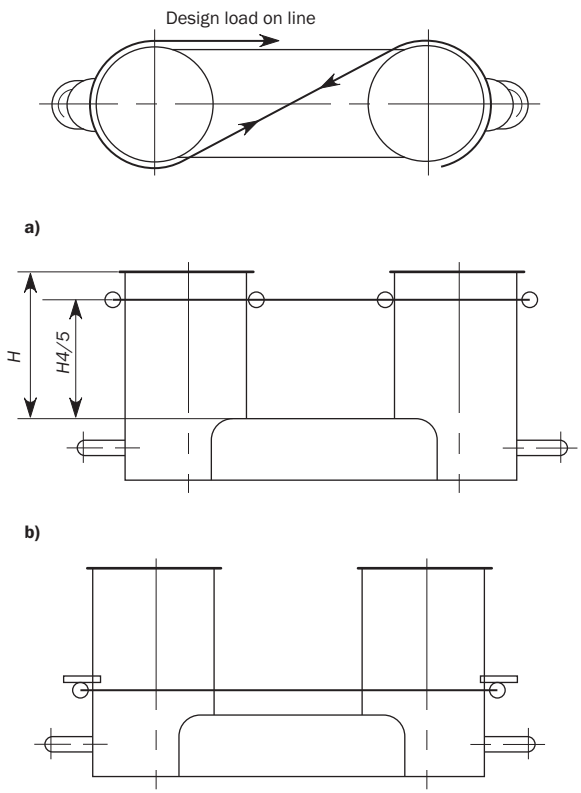

5.3.4 Safe working load (*SWL*)

The Safe Working Load (*SWL*), in t, is the load limit for mooring purpose.

The following requirements on Safe Working Load apply for the use with no more than one mooring line.

Unless a greater *SWL* is provided by the designer, the *SWL* is not to exceed the minimum breaking strength of the mooring line provided by the designer (refer to Ch 11, Sec 3, [3.9]).

The *SWL* of each deck fitting is to be marked (by weld bead or equivalent) on the deck fittings used for mooring.

For fittings intended to be used for, both, mooring and towing, *TOW*, in t, according to [5.2.4] is to be marked in addition to *SWL*.

5.4 Supporting structure

5.4.1

Shipboard fittings for towing and mooring, winches and capstans for mooring are to be located on stiffeners and/or girders, which are part of the deck construction so as to facilitate efficient distribution of the towing or mooring loads. Other arrangements may be accepted (for chocks in bulwarks, etc.) provided the strength is confirmed adequate for the intended service.

5.4.2

The reinforced structural members beneath shipboard fittings are to be effectively arranged for any variation of direction (horizontally and vertically) of the towing/mooring forces acting upon the shipboard fittings (see Figure 7).

Figure 7 : Sample arrangement

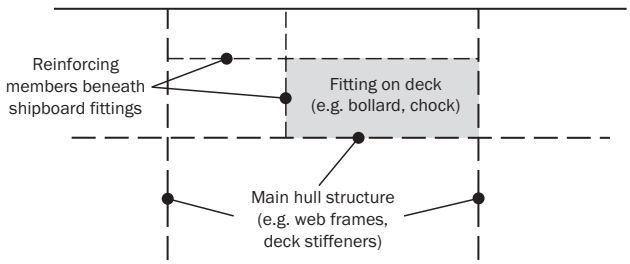

5.4.3

Shipboard fittings (bollards and bitts, fairleads, stand rollers and chocks) and capstans used for mooring and/or towing operations are to be fitted to the deck or bulwark structures.

5.4.4

The structural arrangement is to provide continuity of strength. Proper alignment of fittings and supporting structure is to be ensured.

The structural arrangement of the ship's structure in way of the shipboard fittings and their seats and in way of capstans is to be such that abrupt changes of shape or section are to be avoided in order to minimise stress concentrations. Sharp corners and notches are to be avoided, especially in highly stressed areas.

5.5 Acceptance criteria

5.5.1

For the design load specified in [5.2.1] and [5.3.1], the stresses induced in the shipboard fittings, the supporting structure and welds are not to exceed the following permissible values defined in [5.5.3] and [5.5.4], as applicable.

5.5.2

The strength assessment of the shipboard fittings can be performed by means of either beam theory or grillage analysis, or by finite element analysis.

At the discretion of the Society, load tests of the fittings may be accepted as alternative to strength assessment by above mentioned analysis.

5.5.3

For strength assessment with beam theory or grillage analysis, the permissible stresses to be considered are the following:

- Normal stress: 1.00 R_{eH}
- Shear stress: 0.60 R_{eH}

Normal stress is the sum of bending stress and axial stress with the corresponding shearing stress acting perpendicular to the normal stress. No stress concentration factors are taken into account.

5.5.4

For strength assessment with finite element analysis, the von Mises equivalent stress to be considered is not to exceed R_{eH}.

For strength calculations by means of finite elements, the geometry is to be modelled as realistically as possible. The ratio of element length to width is not to exceed 3. Girders are to be modelled using shell or plane stress elements. Symmetric girder flanges may be modelled by beam or truss elements. The element height of girder webs must not exceed one-third of the web height. In way of small openings in girder webs the web thickness is to be reduced to a mean thickness over the web height. Large openings are to be modelled. Stiffeners may be modelled by using shell, plane stress, or beam elements. Stresses are to be read from the centre of the individual element. For shell elements the stresses are to be evaluated at the mid plane of the element.

5.6 Corrosion addition of the fittings

5.6.1

The corrosion addition, t_c, of the fittings is not be less than the following values:

a) For pedestals and foundations on deck which are not part of a fitting according to an accepted industry standard, 2.0 mm.

b) For shipboard fittings not selected from an accepted Industry standard, 2.0 mm.

5.6.2

In addition to the corrosion addition the wear allowance, t_w, for shipboard fittings not selected from an accepted Industry standard is not to be less than 1.0 mm, added to surfaces which are intended to regularly contact the line.

5.7 Towing and mooring arrangements plan

5.7.1

The *SWL* and *TOW* for the intended use for each deck fitting is to be stated in the towing and mooring arrangements plan available onboard for the guidance of the Master.

It is to be noted that *TOW* is the load limit for towing purpose and *SWL* that for mooring purpose.

For each deck fitting, the following is to be included on the arrangement plan:

a) Location on the ship,

b) Fitting type,

c) *SWL* and or *TOW*,

d) Purpose (mooring, harbour towing, other towing),

e) Manner of applying towing or mooring line load including limiting fleet angles.

Item c) with respect to items d) and e), is subject to approval by the Society.

5.7.2

The information provided on the plan is to include:

a) The arrangement of mooring lines showing number of lines (N),

b) The minimum breaking strength of each mooring line (MBL),

c) The acceptable environmental conditions:

- 30 second mean wind speed from any direction
- Maximum current speed acting on bow or stern (±10°).

This information is to be incorporated into the pilot card in order to provide the pilot with proper information on harbor and other towing operations.

5.7.3

The towing and mooring arrangements plan is to define the method of use of towing lines and/or mooring lines.

6 MISCELLANEOUS DECK FITTINGS

6.1 Support and attachment

6.1.1

The following requirements are to be considered in the design of the support and attachment of miscellaneous fittings which impose relatively small loads on the ship's structure. The arrangement of such details and their approval is considered on a case-by-case basis by the Society.

6.1.2

Support positions are to be arranged so that the attachment to the ship structure is clear of deck openings and stress concentrations, such as the toes of end brackets. Design of supports is to be such that the attachment to the deck minimises the creation of hard points.

SECTION 5
SMALL HATCHWAYS

SYMBOLS

For symbols not defined in this section, refer to Ch 1, Sec 4.

1 GENERAL

1.1 Application

1.1.1

The requirements in [1.2] to [1.6] apply to small hatchways at weather deck in positions 1 and 2 as defined in Ch 1, Sec 4, [3.2]. The requirements in [2] apply to small hatchways fitted on the exposed fore deck over the forward 0.25 *L*.

Hatchways of bulk carriers not covered by the definition of small hatchways in [1.4.1] are to comply with applicable requirements in Pt 2, Ch 1.

1.2 Materials

1.2.1

Materials used for the construction of steel hatch covers are to comply with the applicable requirements of the Society.

1.2.2

The use of materials other than steel is considered by the Society on a case-by-case basis.

1.3 Height of hatch coamings

1.3.1

The height above the deck of hatch coamings is not to be less than:

- 600 mm in position 1.
- 450 mm in position 2.

1.3.2

The height, given in [1.3.1], of hatch coamings closed by steel covers provided with gaskets and securing devices may be reduced or the coamings may be omitted entirely, on condition that the Flag Administration is satisfied that the safety of the ship is not thereby impaired in any sea conditions.

In such cases the scantlings of the covers, their gasketing, their securing arrangements and the drainage of recesses in the deck are considered by the Society on a case-by-case basis.

1.4 Small hatchways

1.4.1

Small hatches are hatches designed for access to spaces below the deck and are capable to be closed weathertight or watertight, as applicable. Their opening is generally equal to or less than 2.5 m^2.

Hatch covers on exposed decks are to be weathertight.

Hatch covers fitted in way of ballast tanks, fuel oil tanks or other tanks are to be watertight.

1.4.2

Securing arrangements and stiffening of hatch cover edges are to be such that weathertightness can be maintained in any sea condition. At least one securing device is to be fitted at each side. Circular hole hinges are considered equivalent to securing devices.

1.4.3

Hatchways of special design are considered by the Society on a case-by-case basis.

1.4.4

The gross thickness of covers is to be not less than 8 mm. This thickness is to be increased or an efficient stiffening is to be fitted where the greatest horizontal dimension of the cover exceeds 0.6 m.

1.4.5

The gross thickness of coaming plate is not to be less than the lesser of the following values:

- The gross thickness for the deck in way of hatch coaming, assuming as spacing of stiffeners the lesser of the values of the height of the coaming and the distance between its stiffeners.
- 10 mm.

Coamings are to be strengthened where their height exceeds 0.8 m or their greatest horizontal dimension exceeds 1.2 m, unless their shape ensures an adequate rigidity.

1.5 Cargo tank access hatchways

1.5.1

Requirements given in [1.2] to [1.4] have to be considered as minimum requirements for cargo tank hatchways.

The requirements of [1.5.4] do not apply to dished covers or covers of other specially approved design.

1.5.2

Covers for access hatches, tank cleaning and other openings for cargo tanks and adjacent spaces are to be manufactured from the following material:

a) Normal strength steel in accordance with Ch 3, Sec 1.

b) Non-ferrous material may be considered, such as bronze or brass. Aluminium alloy is not to be used for covers of any opening to cargo tanks and spaces adjacent thereto.

c) Synthetic materials may be considered, taking into account their fire resistance and their physical and chemical properties in relation to the intended operating conditions. Details of the properties of the material, the design of the cover, and the method of manufacture are to be submitted for approval.

The hatch cover packing material is to be compatible with the cargoes that are intended to be carried and is to be effectively held in place.

1.5.3

The height of the hatch coaming above the upper surface of the freeboard deck is not to be less than 600 mm. Lower heights may be permitted by the Flag Administration. In addition, the top of the hatch coaming is not to be lower than the highest point of the tank over which it is fitted and is to be of sufficient height for the purpose of damage stability.

The gross thickness of the coaming plate is not to be less than 10 mm. Where the coaming height, as fitted, exceeds 600 mm, the thickness may be required to be increased or edge stiffening fitted. The scantlings of coaming plates of tank access coamings that enclose an area of 1.2 m^2 or more, and/or those that are not configured with a well rounded shape, may be subject to additional requirements.

1.5.4

The gross thickness of unstiffened plate covers with an area less than 1.2 m^2 is not to be less than 12.5 mm. The gross thickness of covers of a larger area will need to be increased or the cover will require stiffening.

Flat and unstiffened covers on circular hatchways are to be secured by fastenings with a spacing of not more than 600 mm.

On rectangular hatchways, the spacing of fastenings is generally not to be greater than 450 mm and the distance between hatch corners and adjacent fastenings is not to be greater than 230 mm.

Where the cover is hinged, adequate stiffening of the coaming and cover in way of the hinge is to be provided. In general, hinges are not to be considered securing devices for the cover and are to be designed so as to prevent the gasket from being over-tightened.

1.6 Gaskets

1.6.1

The sealing is to be obtained by a continuous gasket of relatively soft elastic material compressed to achieve the necessary weathertightness.

1.6.2

Coamings and steel parts of hatch covers in contact with gaskets are to have no sharp edges.

2 SMALL HATCHWAYS FITTED ON THE EXPOSED FORE DECK

2.1 General

2.1.1

These requirements apply to small hatchways (generally openings 2.5 m^2 or less) on the exposed deck within 0.25 *L* from the FP and located at a height less than 0.1 *L* or 22 m, whichever is less, from the summer load water line at the location of the hatch.

2.1.2

Hatchways designed for emergency escape need not comply with the requirements [2.3.1] items (a) and (b), [2.4.3] and [2.5.1].

2.1.3

Securing devices of hatches designed for emergency escape are to be of a quick-acting type (e.g. one action wheel handles are provided as central locking devices for latching/unlatching of hatch cover) operable from both sides of the hatch cover.

2.2 Strength

2.2.1

For small rectangular steel hatch covers, the gross plate thickness, stiffener arrangement and scantlings are to be not less than those obtained, in mm, from Table 1 and Figure 2. Stiffeners, where fitted, are to be aligned with the metal-to-metal contact points, required in [2.4.1] and shown in Figure 2. Primary stiffeners are to be continuous. All stiffeners are to be welded to the inner edge stiffener, see Figure 1.

Table 1 : Gross scantlings for small steel hatch covers on the fore deck

Nominal size, in mm	Cover plate thickness, in mm	Primary stiffeners	Secondary stiffeners
		Flat bar size, in mm ; number of stiffeners	
630 × 630	8	-	-
630 × 830	8	100 × 8 ; 1	-
830 × 630	8	100 × 8 ; 1	-
830 × 830	8	100 × 10 ; 1	-
1030 × 1030	8	120 × 12 ; 1	80 × 8 ; 2
1330 × 1330	8	150 × 12 ; 2	100 × 10 ; 2

2.2.2

The upper edge of the hatchway coaming is to be suitably reinforced by a horizontal member, normally not more than 190 mm from the upper edge of the coaming.

2.2.3

For small hatch covers of circular or similar shape, the cover plate thickness and reinforcement is to provide strength and stiffness equivalent to the requirements for small rectangular hatches.

2.2.4

For small hatch covers constructed of materials other than normal strength steel, the required scantlings are to provide equivalent strength and stiffness.

2.3 Primary securing devices

2.3.1

The primary securing devices are to be fitted such that the hatch cover can be secured in place and be made weathertight by means of a closing mechanism employing any one of the following methods:

a) Butterfly nuts tightening onto forks (clamps),

b) Quick acting cleats, or

c) A central locking device.

Dogs (twist tightening handles) with wedges are not acceptable.

2.4 Requirement to primary securing

2.4.1

The hatch cover is to be fitted with a gasket of elastic material. This is to be designed to allow a metal to metal contact at a designed compression and to prevent over compression of the gasket by green sea forces that may cause the securing devices to be loosened or dislodged. The metal-to-metal contacts are to be arranged close to each securing device in accordance with Figure 2 and of sufficient capacity to withstand the bearing force.

2.4.2

The primary securing method is to be designed and manufactured such that the designed compression pressure is achieved by one person without the need of any tools.

2.4.3

For a primary securing method using butterfly nuts, the forks (clamps) are to be of robust design. They are to be designed to minimise the risk of butterfly nuts being dislodged while in use; by means of curving the forks upward, a raised surface on the free end, or a similar method. The plate thickness of unstiffened steel forks is to be not less than 16 mm. An example arrangement is shown in Figure 1.

2.4.4

For small hatch covers located on the exposed deck forward of the foremost cargo hatch, the hinges are to be fitted such that the predominant direction of green seas will cause the cover to close, which means that the hinges are normally to be located on the fore edge.

2.4.5

On small hatches located between the main hatches, for example between No. 1 and No. 2, the hinges are to be placed on the fore edge or outboard edge, whichever is practicable for protection from green water in beam sea and bow quartering conditions.

2.5 Secondary securing devices

2.5.1

Small hatches on the fore deck are to be fitted with an independent secondary securing device, e.g. by means of a sliding bolt, a hasp or a backing bar of slack fit, which is capable of keeping the hatch cover in place, even in the event that the primary securing device became loosened or dislodged. It is to be fitted on the side opposite to the hatch cover hinges.

Figure 1 : Example or primary securing device

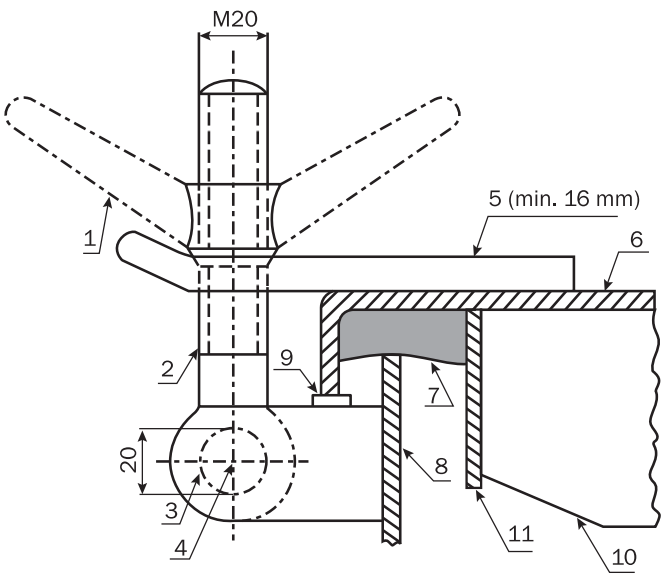

1. Butterfly nut
2. Bolt
3. Pin
4. Centre of pin
5. Fork (clamp) plate
6. Hatch cover
7. Gasket
8. Hatch coaming
9. Bearing pad welded on the bracket of a toggle bolt for metal to metal contact
10. Stiffener
11. Inner edge stiffener

(Note: Dimensions in millimetres)

Figure 2 : Arrangement of stiffeners

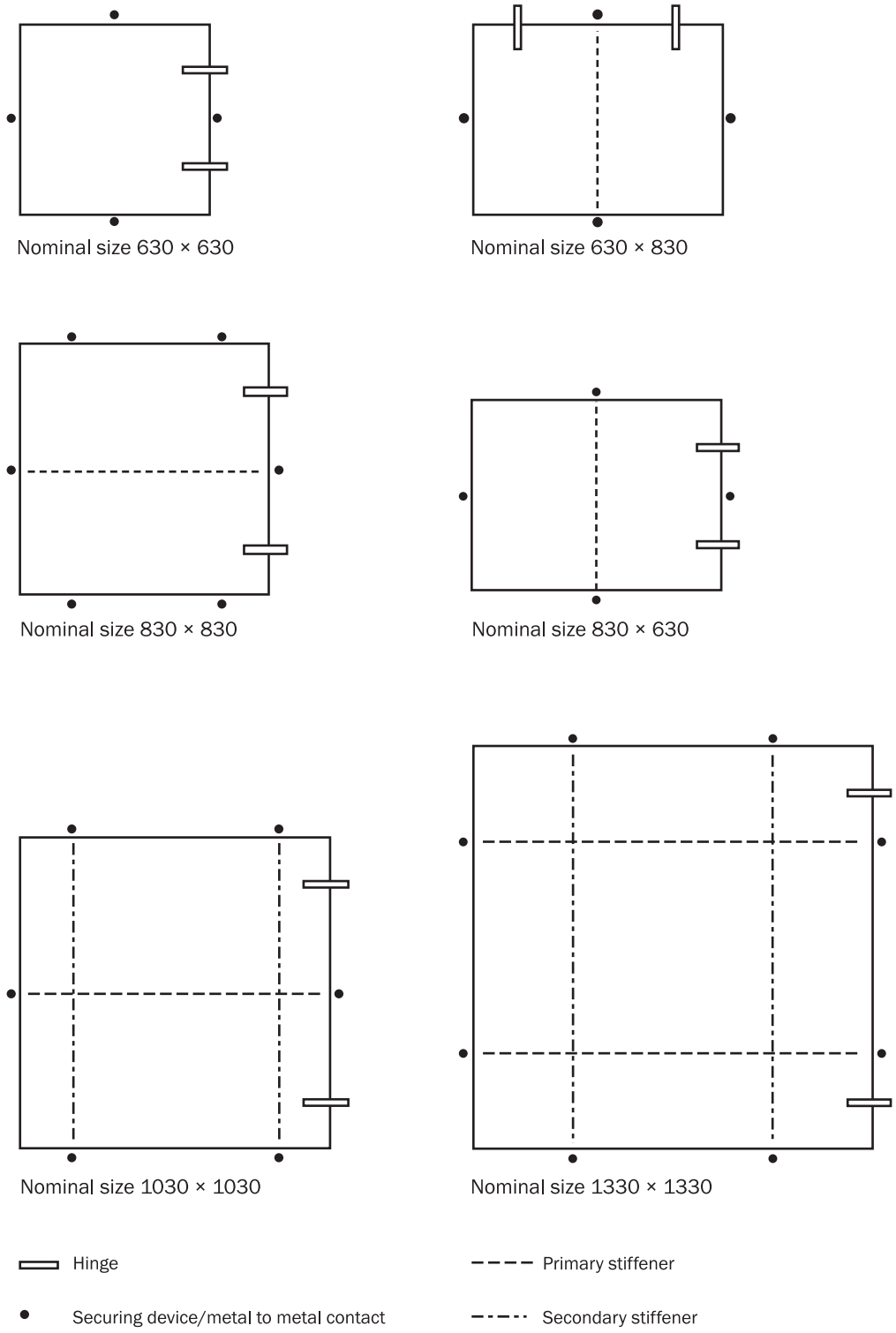

PART 1 CHAPTER 12

CONSTRUCTION

Table of Contents

SECTION 1
Construction and Fabrication
1 General
2 Cut-Outs, Plate Edges
3 Cold Forming
4 Hot Forming
5 Assembly and Alignment
SECTION 2
Fabrication by Welding
1 General
2 Welding Procedures, Welding Consumables and Welders
3 Weld Joints
4 Non-Destructive Examination (NDE)
SECTION 3
Design of Weld Joints
1 General
2 Tee or Cross Joint
3 Butt Joint
4 Other Types of Joints
5 Connection Details

SECTION 1
CONSTRUCTION AND FABRICATION

1 GENERAL

1.1 Workmanship

1.1.1

All workmanship is to be of commercial marine quality and acceptable to the surveyor. Welding is to be in accordance with the requirements of Ch 12, Sec 2. Any defect is to be rectified to the satisfaction of the surveyor before the material is covered with paint, cement or any other composition.

1.2 Fabrication standard

1.2.1

Structural fabrication is to be carried out in accordance with IACS Recommendation No. 47 or with a recognised fabrication standard which has been accepted by the Society prior to the commencement of fabrication/construction.

1.2.2

The fabrication standard to be used during fabrication/construction is to be made available to the attending representative of the Society prior to the commencement of the fabrication/construction.

1.2.3

The fabrication standard is to include information, to establish the range and the tolerance limits, for the items specified as follows:

a) Cut edges: the slope of the cut edge and the roughness of the cut edges.

b) Flanged stiffeners and brackets and built-up sections: the breadth of flange and depth of web, angle between flange and web, and straightness in plane of flange or at the top of face plate.

c) Pillars: the straightness between decks and cylindrical structure diameter.

d) Brackets and flat bar stiffeners: the distortion at the free edge line of tripping brackets and flat bar stiffeners.

e) Sub-assembly stiffeners: details of sniped end of face plates and webs.

f) Plate assembly: for flat and curved blocks, the dimensions (length and breadth), distortion and squareness, and the deviation of interior members from the plate.

g) Cubic assembly: in addition to the criteria for plate assembly, twisting deviation between upper and lower plates, for flat and curved cubic blocks.

h) Special assembly: the distance between upper and lower gudgeons, distance between aft edge of propeller boss and aft peak bulkhead, twist of stern frame assembly, breadth and length of top plate of main engine bed. Where boring out of the propeller boss and stern frame, skeg or solepiece are to be carried out after completing the major part of the welding of the aft part of the ship. Where block boring is used, the shaft alignment is to be carried out using a method and sequence submitted to and recognised by the Society. The fit-up and alignment of the rudder, pintles and axles are to be carried out after completing the major parts of the welding of the aft part of the ship. The contacts between the conical surfaces of pintles, rudder stocks and rudder axles are to be checked before the final mounting.

i) Butt joints in plating: alignment of butt joint in plating.

j) Cruciform joints: alignment measured on the median line and measured on the heel line of cruciform joints.

k) Alignment of interior members: alignments of flange of T profiles, alignment of panel stiffeners, gaps in T joints and lap joints, and distance between scallop and cut-outs for continuous stiffeners in assembly and in erection joints.

l) Keel and bottom sighting: deflections for whole length of the ship, and for the distance between two adjacent bulkheads, cocking-up of fore body and of aft body, and rise of floor amidships.

m) Dimensions: length between perpendiculars, moulded breadth and depth at midship, and length between aft edge of propeller boss and main engine.

n) Fairness of plating between frames: deflections between frames of shell, tank top, bulkhead, upper deck, superstructure deck, deckhouse deck and wall plating.

o) Fairness of plating in way of frames: deflections of shell, tank top, bulkhead, strength deck plating and other structures measured in way of frames.

2 CUT-OUTS, PLATE EDGES

2.1 General

2.1.1

The free edges (cut surfaces) of cut-outs, hatch corners, etc are to be properly prepared and are to be free from notches. As a general rule, cutting draglines, etc are to be smoothly ground. All edges are to be broken or in cases of highly stressed parts, be rounded off.

Free edges on flame or machine cut plates or flanges are not to be sharp cornered and are to be finished off as specified above. This also applies to cutting drag lines, etc, in particular to the upper edge of sheer strake and analogously to weld joints, changes in sectional areas or similar discontinuities.

2.1.2

Corners in hatch opening are to be machine cut.

3 COLD FORMING

3.1 Special structural members

3.1.1

For highly stressed components of the hull girder where notch toughness is of particular concern (e.g. items required to be Class III in Ch 3, Sec 1, Table 3, such as radius gunwales (bent sheer plates) and bilge strakes), the inside bending radius, in cold formed plating, is not to be less than 10 times the as-built plate thickness for carbon-manganese steels (see Ch 3, Sec 1). The allowable inside bending radius may be reduced provided the requirements stated in [3.3] are complied with.

3.2 Corrugated bulkheads and hopper knuckles

3.2.1

For corrugated bulkheads and hopper knuckles, the inside bending radius, in cold formed plating, is not to be less than 4.5 times the as-built plate thickness for carbon-manganese steels (see Ch 3, Sec 1). The allowable inside bending radius may be reduced provided the requirements stated in [3.3] are complied with.

3.3 Low bending radius

3.3.1

When the inside bending radius is reduced below 10 times or 4.5 times the as-built plate thickness according to [3.1] and [3.2] respectively, supporting data is to be provided. The bending radius is in no case to be less than 2 times the as-built plate thickness. As a minimum, the following additional requirements are to be complied with:

a) For all bent plates:

- 100% visual inspection of the bent area is to be carried out.
- Random checks by magnetic particle testing are to be carried out.

b) In addition to a), for bent plates at boundaries to tanks or ballast holds:

- The steel is to be of Grade D/DH or higher.
- The material is impact tested in the strain-aged condition and satisfies the requirements stated herein. The deformation is to be equal to the maximum deformation to be applied during production, calculated by the formula $t_{as\text{-}built}/(2r_{bdg} + t_{as\text{-}built})$, where $t_{as\text{-}built}$ is the as-built thickness of the plate material and r_{bdg} is the bending radius. One sample is to be plastically strained at the calculated deformation or 5%, whichever is greater and then artificially aged at 250°C for one hour then subject to Charpy V-notch testing. The average impact energy after strain ageing is to meet the impact requirements specified for the grade of steel used.

4 HOT FORMING

4.1 Temperature requirements

4.1.1

Steel is not to be formed between the upper and lower critical temperatures. If the forming temperature exceeds 650°C for as-rolled, controlled rolled, thermo-mechanical controlled rolled or normalised steels, or is not at least 28°C lower than the tempering temperature for quenched and tempered steels, mechanical tests are to be made to assure that these temperatures have not adversely affected both the tensile and impact properties of the steel. Where curve forming or fairing, by line or spot heating, is carried out in accordance with [4.2.1] these mechanical tests are not required.

4.1.2

After further heating, other than specified in [4.1.1], of Thermo-Mechanically Controlled Steels (TMCP plates) for forming and stress relieving, it is to be demonstrated that the mechanical properties meet the requirements specified by a procedure test using representative material.

4.2 Line or spot heating

4.2.1

Curve forming or fairing, by linear or spot heating, is to be carried out using approved procedures in order to ensure that the properties of the material are not adversely affected. Heating temperature on the surface is to be controlled so as not to exceed the maximum allowable limit applicable to the plate grade.

5 ASSEMBLY AND ALIGNMENT

5.1 General

5.1.1

The use of excessive force is to be avoided during the assembly of individual structural components or during the erection of sections. Major distortions of individual structural components are to be corrected before further assembly.

After completion of welding, straightening and aligning are to be carried out in such a manner that the material properties are not influenced significantly. In case of doubt, the Society may require a procedure test or a working test to be carried out.

5.1.2

Structural members are to be aligned following the provisions of IACS Recommendation No. 47, Tables 7 or according to the requirements of a recognised fabrication standard that has been accepted by the Society. In the case of critical components, control drillings are to be made where necessary, which are then to be welded up again on completion.

SECTION 2
FABRICATION BY WELDING

1 GENERAL

1.1 Application

1.1.1

The requirements of this section apply to the preparation, execution and inspection of welded connections in hull structures.

1.2 Limits of application to welding procedures

1.2.1 Weld type, size and materials

The requirements of this section for weld type, size and materials are based on the following considerations:

- Joint type.
- Criticality of the joint.
- Magnitude, type and direction of the stresses in the joint.
- Material properties of the parent and weld material.
- Weld gap size.

1.2.2 Preparation, execution and inspection

The requirements of this section are to be complemented by the general requirements relevant to fabrication by welding and qualification of welding procedures given by the Society when deemed appropriate by the Society.

2 WELDING PROCEDURES, WELDING CONSUMABLES AND WELDERS

2.1 General

2.1.1

All welding is to be carried out by approved welders, in accordance with approved welding procedures, using approved welding consumables, in compliance with the Rules of the Society.

Personnel manning automatic welding machines and equipment are to be competent, sufficiently trained and certified by the Society as specified in Society Rules or Guidelines for welding.

3 WELD JOINTS

3.1 General

3.1.1

Welding of connections is to be executed according to the approved plans.

3.1.2

The quality standard adopted by the shipyard is to be submitted to the Society and it applies to all welded connections unless otherwise specified on a case-by-case basis.

3.1.3

Consideration is to be given to the assembly sequence and the effect of the overall shrinkage of plate panels, assemblies, etc, resulting from the welding processes employed. Welding is to proceed systematically, with each welded joint being completed in correct sequence, without undue interruption. When practicable, welding is to commence at the centre of a joint and proceed outwards, or at the centre of assembly and progress outwards towards the perimeter so that each part has freedom to move in one or more directions.

3.1.4

Completed welded joints are to be to the satisfaction of the attending surveyor. Edge preparations and root gaps are to be in accordance with the approved welding procedure. The gap between the members being joined should not exceed the maximum values given in IACS Recommendation No. 47 or as specified in recognised fabrication standard approved by the Society. Where the gap between members being joined exceeds the specified values, corrective measures are to be taken in accordance with an approved welding procedure specification.

3.1.5

Where small fillets are used to attach heavy plates or sections, welding is to be based on approved welding procedure specifications. Special precautions, such as the use of preheating, low-hydrogen electrodes or low-hydrogen welding processes, are accepted.

3.1.6

When heavy structural members are attached to relatively light plating, the weld size and sequence may require modification.

3.1.7

Where quality control systems are in place which ensure that the grade of welding consumable used is higher than the minimum required for the particular strength steel being welded, the welding consumables that are used may have a weld deposit material yield strength that is greater than the minimum specified in Ch 12, Sec 3, [2.5.2] and the size of the weld may be determined based on the yield strength of the higher grade welding consumable.

3.1.8

In general, butt joints are to be welded from both sides. Before welding is carried out on the second side, unsound metal is to be removed at the root by a suitable method. Butt welding from one side will only be permitted for specific applications with an approved welding procedure specification.

3.1.9 Arrangements at junctions of welds

Welds are to be made flush in way of the faying surface where stiffening members, attached by continuous fillet welds, cross the completely finished butt or seam welds. Similarly, butt welds in webs of stiffening members are to be completed and made flush with the stiffening member before the fillet weld is made. The ends of the flush portion are to run out smoothly without notches or sudden changes of section. Where these conditions can not be complied with, a scallop is to be arranged in the web of the stiffening member. Scallops are to be of the size, and in a position, that a satisfactory return weld can be made.

3.1.10 Leak stoppers

Where structural members pass through the boundary of a tank, leakage into adjacent space could be hazardous or undesirable, and full penetration welding is to be adopted for the members for at least 150 mm on each side of the boundary. Alternatively, a small scallop of suitable shape may be cut in a member close to the boundary outside of the compartment, and carefully welded all around.

4 NON-DESTRUCTIVE EXAMINATION (NDE)

4.1 General

4.1.1

The NDE plan to be submitted for approval has to contain the necessary data relevant to the locations and number of examinations, welding procedures applied, method of NDE applied, etc. Visual inspection of finished welds is to be carried out by the shipyard to ensure that all welding has been satisfactory completed. In addition to visual inspection, welded joints are to be examined using any one or a combination of ultrasonic, radiographic, magnetic particle, eddy current, dye penetrant or other acceptable methods appropriate to the configuration of the weld. Above inspections are to be carried out as per the requirements of the Society.

4.1.2

NDE of welding is to be carried out at the positions indicated by the NDE plan in order to ensure that the welds are free from cracks and unacceptable internal defects with regards to the requirements of the Society. NDE is to be carried out by qualified personnel certified by recognised bodies in compliance with recognised standards.

SECTION 3
DESIGN OF WELD JOINTS

SYMBOLS

A_{weld} : Effective fillet weld area, in cm^2.

f : Root face, in mm.

f_{weld} : Weld factor.

f_{yd} : Correction factor taking into account the yield strength of the weld deposit as defined in [2.5.2].

ℓ_{dep} : Total length of deposit of weld metal, in mm.

ℓ_{leg} : Leg length of continuous, lapped or intermittent fillet weld, in mm.

ℓ_{weld} : Length of the welded connection in mm.

R_{eH_weld} : Minimum yield stress of weld deposit, in N/mm^2.

$t_{as\text{-}built}$: As-built thickness of the member being joined, in mm.

t_{gap} : Allowance for fillet weld gap, is to be taken equal to 2.0 mm.

t_{throat} : Throat thickness of fillet weld in mm, as defined in [2.5.3].

1 GENERAL

1.1 Application

1.1.1

The requirements of this section apply to the design of welded connections in hull structures and are based on the considerations mentioned in Ch 12, Sec 2, [1.2.1].

1.1.2

Plans and/or specifications showing weld sizes and weld details are to be submitted for approval.

1.1.3

The leg length of welds is to comply with the minimum leg length given in Table 1.

1.2 Alternatives

1.2.1

The requirements given in this section are considered minimum for electric-arc welding in hull construction, but alternative methods, arrangements and details will be specially considered for approval.

2 TEE OR CROSS JOINT

2.1 Application

2.1.1

The connection of primary supporting members, stiffener webs to plating as well as the plating abutting on another plating, are to be made by fillet or penetration welding, as shown on Figure 1.

Figure 1 : Tee or cross joints

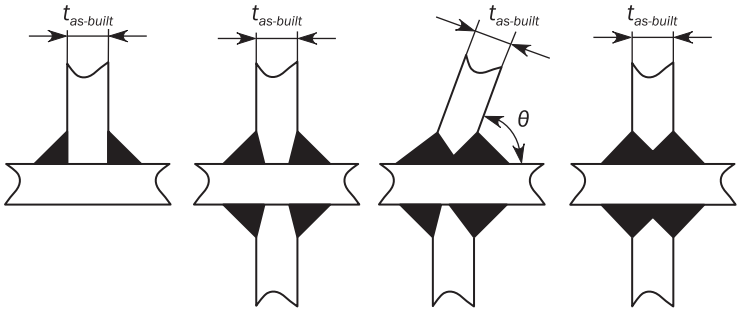

$t_{as\text{-}built}$: As-built thickness of the member being attached, mm.

θ : Connecting angle, in deg.

2.1.2

Where the connection is highly stressed or otherwise considered critical, a partial or full penetration weld is to be achieved by bevelling the edge of the abutting plate.

2.2 Continuous fillet welds

2.2.1

Continuous welding is to be adopted in the following locations:

a) Connection of the web to the face plate for all members.

b) All fillet welds where higher strength steel is used.

c) Boundaries of weathertight decks and erections, including hatch coamings, companionways and other openings.

d) Boundaries of tanks and watertight compartments.

e) All structures inside tanks and cargo holds.

f) Stiffeners and primary supporting members at tank boundaries.

g) All structures in the aft peak and stiffeners and primary supporting members of the aft peak bulkhead.

h) All structures in the fore peak.

i) Welding in way of all end connections of stiffeners and primary supporting members, including end brackets, lugs, scallops, and at orthogonal connections with other members.

j) All lap welds in the main hull.

k) Primary supporting members and stiffener members to bottom shell in the 0.3 *L* forward region.

l) Flat bar longitudinals to plating.

m) The attachment of minor fittings to higher strength steel plating and other connections or attachments.

n) Pillars to heads and heels.

o) Hatch coaming stay webs to deck plating, see [2.4.5].

2.3 Intermittent fillet welds

2.3.1

Where continuous welding is not required, intermittent welding may be applied.

2.3.2

Where beams, stiffeners, frames, etc, are intermittently welded and pass through slotted girders, shelves or stringers, there is to be a pair of matched intermittent welds on each side of every intersection. In addition, the beams, stiffeners and frames are to be efficiently attached to the girders, shelves and stringers.

Where intermittent welding or one side continuous welding is permitted, double continuous welds are to be applied for one-tenth of their shear span at each end, in accordance with [2.5.2] and [2.5.3].

2.3.3 Deckhouses

One side continuous fillet welding is acceptable in the dry spaces of deckhouses.

2.3.4 Size for one side continuous weld

The size for one side continuous weld is to be of fillet required by [2.5.2] for intermittent welding, where f_3 factor is to be taken as 2.0.

2.4 Partial or full penetration welds

2.4.1 High stress area definition

For the application of this section, high stress area means an area where fine mesh finite element analysis is to be carried out and the fine mesh yield utilisation factor in elements adjacent to the weld is more than 90% of the fine mesh permissible utilisation factor, as defined in Ch 7, Sec 3, [6.2].

2.4.2 Partial or full penetration welding

In areas with high tensile stresses or areas considered critical, full or partial penetration welds are to be used.

In case of full penetration welding, the root face is to be removed, e.g. by gouging before welding of the back side.

For partial penetration welds the root face, f, is, to be taken between 3 mm and $t_{as\text{-}built}/3$.

The groove angle made to ensure welding bead penetrating up to the root of the groove, α, is usually from 40° to 60°.

The welding bead of the full/partial penetration welds is to cover root of the groove.

Examples of partial penetration welds are given on Figure 2.

Figure 2 : Partial penetration welds

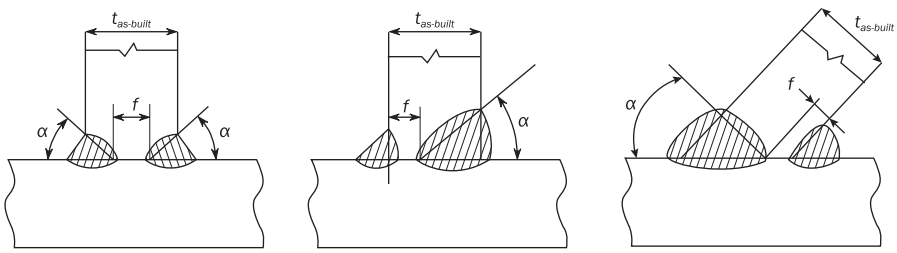

2.4.3 One side partial penetration weld

For partial penetration welds with one side bevelling the fillet weld at the opposite side of the bevel is to satisfy the requirements given in [2.5.2].

2.4.4 Extent of full or partial penetration welding

The extent of full or partial penetration welding in each particular location listed in [2.4.5] and [2.4.6] is to be approved by the Society. However, the minimum extent of full/partial penetration welding from the reference point (i.e. intersection point of structural members, end of bracket toe, etc.) is not to be taken less than 300 mm, unless otherwise specifically stated.

2.4.5 Locations required for full penetration welding

Full penetration welds are to be used in the following locations and elsewhere as required by the rules, see Figure 3:

a) Floors to hopper/inner bottom plating in way of radiused hopper knuckle.

b) Radiused hatch coaming plate at corners to deck.

c) Connection of vertical corrugated bulkhead to the lower hopper plate and to the inner bottom plate within the cargo hold region, when the vertical corrugated bulkhead is arranged without a lower stool.

d) Connection of structural elements in the double bottom in line with corrugated bulkhead flanges to the inner bottom plate, when the vertical corrugated bulkhead is arranged without a lower stool.

e) Connection of vertical corrugated bulkhead to the lower hopper plate, and connection of structural elements in the lower hopper area in line with corrugated bulkhead flanges to the lower hopper plate, where connections are clear of lower stools.

f) Connection of vertical corrugated bulkhead to top plating of lower stool.

g) Corrugated bulkhead lower stool side plating to lower stool top plate.

h) Corrugated bulkhead lower stool side plating to inner bottom.

i) Connection of structural elements in double bottom to the inner bottom plate in holds intended for the carriage of liquid at sea with a distance of 300 mm from the side plating of the lower stool, see Figure 3.

j) Edge reinforcement or pipe penetration both to strength deck, sheer strake and bottom plating within 0.6 L amidships, when the dimensions of the opening exceeds 300 mm.

k) Abutting plate panels with as-built thickness less than or equal to 12 mm, forming outer shell boundaries below the scantling draught, including but not limited to: sea chests, rudder trunks, and portions of transom. For as-built thickness greater than 12 mm, partial penetration in accordance with [2.4.2].

l) Crane pedestals and associated bracketing and support structure.

m) For toe connections of longitudinal hatch coaming end bracket to the deck plating, full penetration weld for a distance of 0.15 H_c from toe of side coaming termination bracket is required, where H_c is the hatch coaming height.

n) Rudder horns and shaft brackets to shell structure.

o) Thick flanges of long transverse web frames to side web frames. Thick flanges of long longitudinal girder to bulkhead web frames.

2.4.6 Locations required for partial penetration welding

Partial penetration welding as defined in [2.4.2], is to be used in the following locations (see examples in Figure 3):

a) Connection of hopper sloping plate to longitudinal bulkhead (inner hull).

b) End connection of longitudinal/transverse bulkhead primary supporting member including buttress structure to the double bottom and both end connections of backing bracket, where it is fitted.

c) Corrugated bulkhead lower stool supporting floors to inner bottom.

d) Corrugated bulkhead gusset and shedder plates.

e) Lower 15% of the length of built-up corrugation of vertical corrugated bulkheads.

f) Structural elements in double bottom below bulkhead primary supporting members and stool plates, except in way of [2.4.5] i).

g) Lower hopper plate to inner bottom.

h) Horizontal stringers on bulkheads in way of their bracket toe and the heel.

[RCN1 to 01 JAN 2020]

Figure 3 : High stress areas welding (examples)

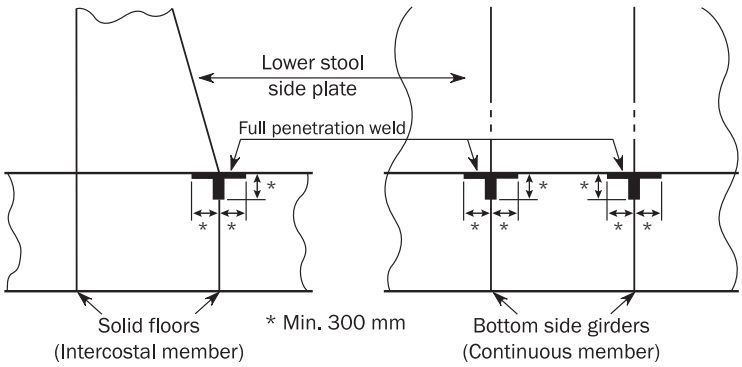

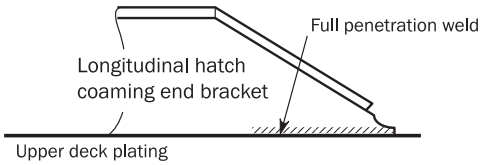

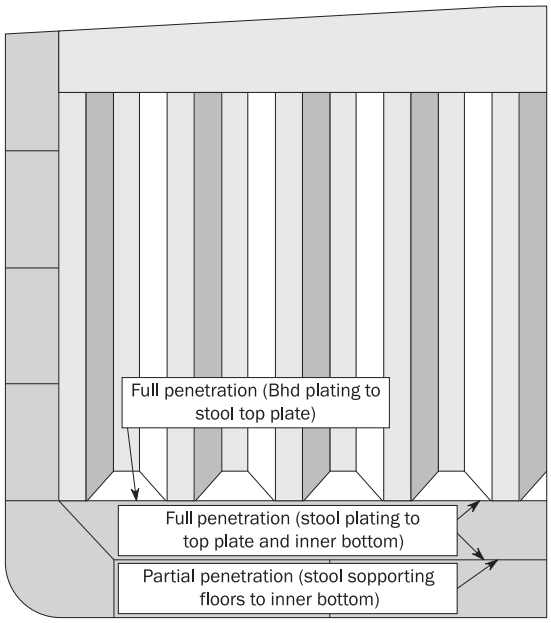

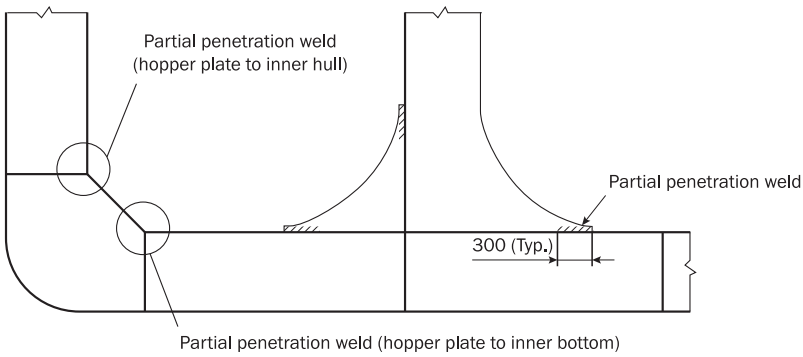

2.4.7 Fine mesh finite element analysis

In high stress area, at least partial penetration welds as defined in [2.4.2] are to be used. The minimum extent of full or partial penetration welding in that case is to be the greater of the following:

- 150 mm in either direction from the element with the highest yield utilisation factor.
- The extent covering all elements that exceed the above mentioned yield utilisation factor criteria.

2.4.8 Shedder plates

In case where shedder plates are fitted at the lower end of corrugated bulkhead, the shedder plates are to be welded to the corrugation and the top plate of the transverse lower stool by one side penetration welds.

2.5 Weld size criteria

2.5.1

The required weld sizes are to be rounded to the nearest half millimetre.

2.5.2

The leg length, ℓ_{leg} in mm, of continuous, lapped or intermittent fillet welds is not to be taken less than the greater of the following values:

$$\ell_{leg} = f_1 \, f_2 \, t_{as-built}$$

$$\ell_{leg} = f_{yd} \, f_{weld} \, f_2 \, f_3 \, t_{as-built} + t_{gap}$$

ℓ_{leg} as given in Table 1.

where:

f_1 : Coefficient depending on welding type:

f_1 = 0.30 for double continuous welding.

f_1= 0.38 for intermittent welding.

f_2 : Coefficient depending on the edge preparation:

f_2 = 1.0 for welds without bevelling.

f_2 = 0.70 for welds with one/both side bevelling and $f = t_{as\text{-}built}/3$.

f_{yd} : Coefficient not to be taken less than the following:

$$f_{yd} = \left(\frac{1}{k}\right)^{0.5} \left(\frac{235}{R_{eH_weld}}\right)^{0.75}$$

f_{yd} = 0.71.

R_{eH_weld} : Specified minimum yield stress for the weld deposit in N/mm^2, not to be less than:

: R_{eH_weld} = 305 N/mm^2 for welding of normal strength steel with R_{eH} = 235N/mm^2.

: R_{eH_weld} = 375 N/mm^2 for welding of higher strength steels with R_{eH} from 265 to 355 N/mm^2.

: R_{eH_weld} = 400 N/mm^2 for welding of higher strength steel with R_{eH} = 390N/mm^2.

f_{weld} : Weld factor dependent on the type of the structural member, see Table 2, Table 3 and Table 4.

k : Material factor of the abutting member.

f_3 : Correction factor for the type of weld:

f_3 = 1.0 for double continuous weld.

$f_3 = s_{ctr} / \ell_{weld}$ for intermittent or chain welding.

s_{ctr} : Distance between successive fillet welds, in mm.

2.5.3

The throat size t_{throat}, in mm, as shown in Figure 4, is not to be less than:

$$t_{throat} = \frac{\ell_{leg}}{\sqrt{2}}$$

Figure 4 : Weld scantlings definitions

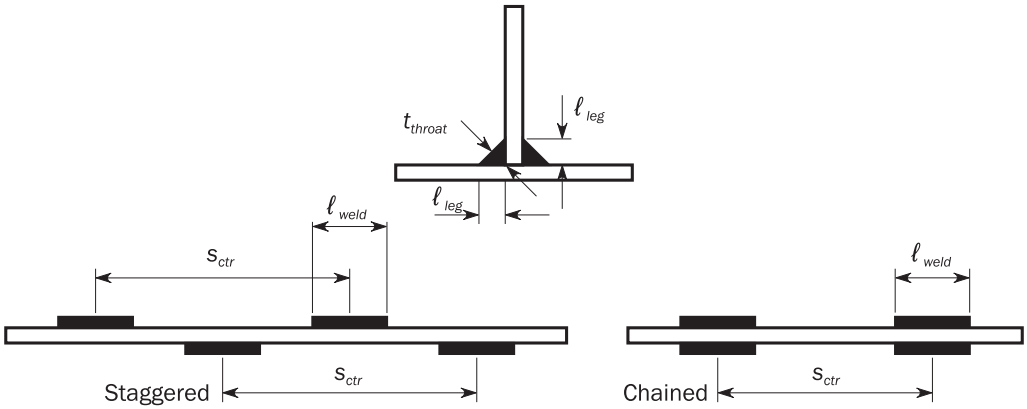

2.5.4

For primary supporting members connections not listed in Table 2 and Table 3, the weld factors from Table 4 are to be used.

Table 1 : Minimum leg size

Area	Type of space		Minimum length, in mm
Cargo hold region	Cargo tanks and holds	Within 3m below top of tank (2)	6.5 (1)
		Elsewhere	6.0 (1)
	Water ballast tanks	Within 3m below top of tank (2)	6.5 (1)
		Elsewhere	6.0 (1)
	Dry spaces and voids		5.0
	Other tanks		6.0 (1)
Other areas	Water ballast tanks	Within 3m below top of tank (2)	6.0 (1)
		Elsewhere	5.5 (1)
	Fuel oil, diesel oil, fresh water and other tanks		4.5
	Dry spaces and voids		4.0
	Superstructures and deckhouses		3.5

(1) If the as-built thickness of the element is less than 12 mm, the minimum leg length may be reduced by 0.5 mm.

(2) Only applicable to cargo tanks and ballast tanks with weather deck as the tank top. the 3m distance is measured vertically from and parallel to the top of the tank.

Table 2 : Weld factors for different structural members

Hull area	Connection				f_{weld}
	Of		To		
General, unless otherwise specified in the table	Watertight plate		Boundary plating		0.48
	Oil-tight plate		Boundary plating		0.51
	Brackets at ends of members				0.48
	Ordinary stiffener and collar plates		Deep tank bulkheads		0.24
			Web of primary supporting members and collar plates		0.38
	Web of stiffener		Plating (except deep tank bulkhead)		0.20
			Face plates of built-up stiffeners	At ends (15% of span)	0.38
				Elsewhere	0.20
Bottom and double bottom	Ordinary stiffener		Bottom and inner bottom plating		0.24
	Centre girder		Shell plates		0.38
			Inner bottom plate		0.38
	Side girder including intercostal plates		Bottom and inner bottom plating		0.24
	Floor		Shell plates and inner bottom plates	At ends, on a length equal to two frame spaces	0.38
			Centre girder and side girders in way of hopper tanks		0.38
			Elsewhere		0.24
	Bracket on centre girder		Centre girder, inner bottom, floors and shell plates		0.38
	Web stiffener		Floor and girder		0.20
Side and inner side in double side structure	Web of primary supporting members		Side plating		0.30
			Inner side plating and web of primary supporting members	in way of deck transverse and end connections	0.43
				in way of cross tie	0.36
				elsewhere	0.30
Deck	Strength deck	$t_{as_built} \geq 13$	Side shell plating within 0.6*L* midship		PPW (3)
			Elsewhere		0.48
		$t_{as_built} < 13$	Side shell plating		0.48
	Other deck		Side shell plating		0.38
			Stiffeners		0.20
	Hatch coamings		Deck plating	Longitudinal hatch coaming at corners of hatchways on a length of 15% of the hatch coaming height	FPW (4) (1)
				Longitudinal hatch coaming on a length starting from 15% of the hatch coaming height from the corners of hatchways up to 15% of the hatch length	0.48
				Elsewhere	0.38
	Web stiffeners		Coaming webs		0.20 (2)
Bulkheads (5)	Non-watertight bulkhead structure		Boundaries	Swash bulkheads	0.24
	Stiffener		Bulkhead plating	At ends (25% of span), where no end brackets are fitted	0.48

Hull area	Connection		f_{weld}
	Of	To	
Aft peak	Internal members	Boundaries and each other: below waterline	0.38
		Above waterline	0.20
Fore peak	Internal members	Boundaries and each other	0.20
Machinery space	Centre girder	Keel and inner bottom	0.48
	Floor	Centre girder	0.48
	Engine foundation girders	Top plate and primary hull structure	PPW (3)
	Floors and girders	Inner bottom and shell plate	0.38
Super-structure and deckhouse	External bulkhead (first and second tier erections)	Deck, external bulkhead	0.48
	External bulkheads and internal bulkheads	Elsewhere	0.20

(1) f_{weld} =0.43 for hatch coaming other than in cargo holds.
(2) Continuous welding.
(3) PPW: Partial penetration welding in accordance with [2.4.2].
(4) FPW: Full penetration welding in accordance with [2.4.2].
(5) Bulkheads of superstructure and deckhouse are to be considered in the row corresponding to "Superstructure and deck house".

Table 3 : Weld factors for miscellaneous fittings and equipment

Item	Connection to	f_{weld}
Hatch cover	Watertight/oil-tight joints	0.48 (1)
	At ends of stiffeners	0.38 (2)
	Elsewhere	0.24
Mast, derrick post, crane pedestal, etc.	Deck / Underdeck reinforced structure	0.43
Deck machinery seat	Deck	0.24
Mooring equipment seat	Deck	0.43
Ring for access hole type cover	Anywhere	0.43
Stiffening of side shell doors and weathertight doors	Anywhere	0.24
Frames of shell and weathertight doors	Anywhere	0.43
Coaming of ventilator and air pipe	Deck	0.43
Ventilators, etc., fittings	Anywhere	0.24
Ventilators, air pipes, etc., coaming to deck	Deck	0.43
Scupper and discharge	Deck	0.55
Bulwark stay	Deck	0.24
Bulwark plating	Deck	0.43
Guard rail, stanchion	Deck	0.43
Cleats and fittings	Hatch coaming and hatch cover	0.24 (3)

(1) For bulk carrier hatch covers, f_{weld} = 0.38 for watertight joints.
(2) For bulk carrier hatch covers, f_{weld} = 0.24 at ends of stiffeners.
(3) Minimum weld factor. Where $t_{as\text{-}built}$ > 11.5mm, ℓ_{leg} need not exceed 0.62 $t_{as\text{-}built}$. Penetration welding may be required depending on design.

[RCN1 to 01 JAN 2020]

Table 4 : Weld factors for primary supporting members

Hull structural member	Connection			f_{weld}
	Of	To		
Primary supporting member	Web plate	Shell plating, deck plating, inner bottom plating, bulkhead	Within end 15% of shear span and extending to end of member	0.48
			Elsewhere	0.38
		Face plate	In tanks/holds Members located within 0.125*L* from fore peak	0.38
			Elsewhere if cross section area of face plate exceeds 65 cm^2	0.38
			Elsewhere	0.24
	End connections		In way of boundaries of ballast and cargo tanks	0.48
			Elsewhere	0.38

2.5.5

Where the as-built web thickness of the abutting longitudinal stiffener is greater than 15 mm and exceeds the thickness of the attached plating, the welding is to be double continuous and the leg length of the weld is not to be less than the largest of the following:

a) 0.30 $t_{as\text{-}built}$, where $t_{as\text{-}built}$ is the as-built thickness of the attached plating without being taken greater than 30 mm.

b) 0.27 $t_{as\text{-}built}$ + 1, where $t_{as\text{-}built}$ is the as-built thickness of the abutting member. The leg size resulting of this formula needs not to be taken greater than 8.0 mm.

c) Leg length given in the Table 1.

2.5.6

Where the minimum weld size is determined by the requirements of second formula shown in [2.5.2], the weld connections to shell, decks or bulkheads are to take account of the material lost in the cut out, where stiffeners pass through the member. In cases where the width of the cut-out exceeds 15 % of the stiffener spacing, the size of weld leg length is to be multiplied by:

$$\frac{0.85\,s}{\ell_w}$$

where:

s : Stiffener spacing in mm, as shown in Figure 5.

ℓ_w : Length of web plating between notches, in mm, as shown in Figure 5.

Figure 5 : Effective material in web cut-outs for stiffeners

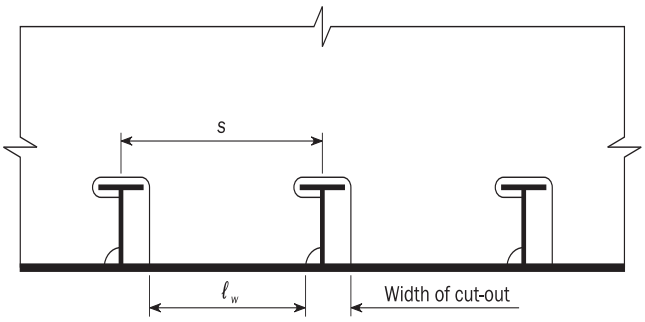

2.5.7 Shear area of primary supporting member end connections

Welding of the end connections, inclusive 10% of shear span, of primary supporting members is to be such that the weld area is to be equivalent to the gross cross sectional area of the member. The weld leg length in mm, ℓ_{leg}, is to be taken as:

$$\ell_{leg} = 1.41\, f_{yd} \frac{h_w\, t_{gr-req}}{\ell_{dep}}$$

where:

h_w : Web height of primary supporting members, in mm.

t_{gr_req} : Required gross thickness of the web in way of the end connection, including 10% of shear span, based on the highest average usage factor for yield from cargo hold FE analysis or the shear area requirement for PSM outside cargo hold region, in mm.

ℓ_{weld} : Length of the welded connection in mm, as shown in Figure 6.

ℓ_{dep} : Total length of deposit of weld metal, in mm, see Figure 6 taken as:

$$\ell_{dep} = 2\, \ell_{weld}$$

The size of weld is not to be less than the value calculated in accordance with [2.5.2].

2.5.8 Longitudinals

Welding of longitudinals to plating is to be doubled continuous at the ends of the longitudinals at the extent of 15 % of shear span as defined in Ch 3, Sec 7, [1.1.3].

In way of primary supporting members, the length of the double continuous weld is to be equal to the depth of the longitudinal or the end bracket, whichever is greater.

Figure 6 : Shear area of primary supporting member

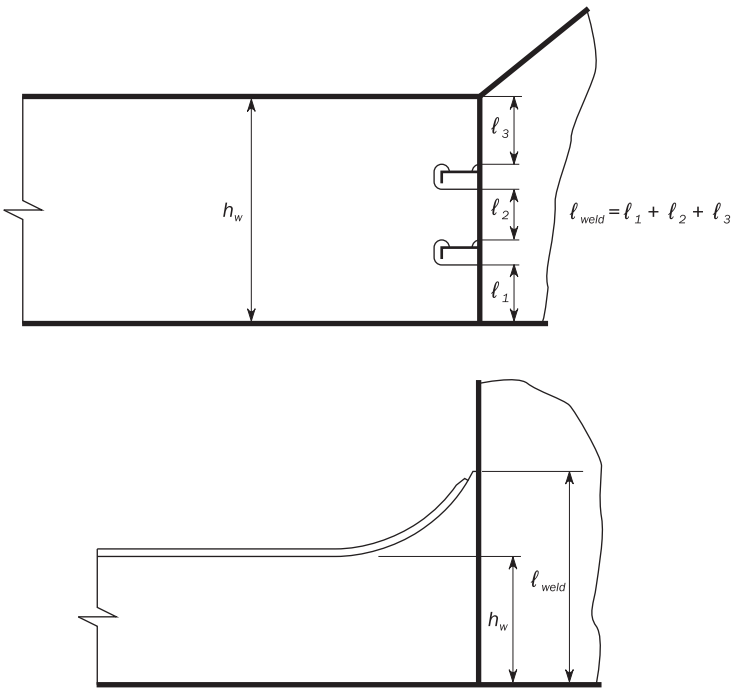

Note 1: The length ℓ_{weld} is the length of the welded connection. The total length of the weld deposit ℓ_{dep} if welded with double continuous fillet welds is twice the length of the welded connection $\ell_{weld.}$.

2.5.9 Deck longitudinals

For deck longitudinals, a matched pair of welds is required at the intersection of longitudinals with primary supporting members.

2.5.10 Longitudinal continuity provided by brackets

Where a longitudinal strength member is to cut at a primary supporting structure and the continuity of strength is provided by brackets, the weld area A_{weld} is not to be less than the gross cross sectional area of the member. The weld area, A_{weld} in cm^2, is to be determined by the following formula:

$$A_{weld} = \frac{f_{yd}\ t_{throat}\ \ell_{dep}}{100}$$

2.5.11 Unbracketed stiffeners

Where intermittent welding is permitted, unbracketed stiffeners of shell, watertight and oil-tight bulkheads, and deckhouse fronts are to have double continuous welds for one-tenth of their length at each end. Unbracketed stiffeners of non-tight structural bulkheads, deckhouse sides and aft ends are to have a pair of matched intermittent welds at each end.

2.5.12 Reduced weld size

Where an approved automatic deep penetration procedure is used and quality control facilitates are working to a gap between members of 1 mm and less, the weld factors given in Table 2 may be reduced by 15% but not more than fillet weld leg size of 1.5 mm. Reductions of up to 20%, but not more than the fillet weld leg size of 1.5 mm, will be accepted provided that the shipyard is able to consistently meet the following requirements:

a) The welding is performed to a suitable process selection confirmed by welding procedure tests covering both minimum and maximum root gaps.

b) The penetration at the root is at least the same amount as the reduction into the members being attached.

c) Demonstrate that an established quality control system is in place.

2.5.13 Reduced weld size justification

Where any of the methods for reduction of the weld size are adopted, the specific requirements giving justification for the reduction are to be indicated on the drawings. The drawings are to document the weld design and dimensioning requirements for the reduced weld length and the required weld leg length given by [2.5.2] without the leg length reduction. Also, notes are to be added to the drawings to describe the difference in the two leg lengths and the requirements for their application.

3 BUTT JOINT

3.1 General

3.1.1

Joints in the plate components of stiffened panel structures are generally to be joined by butt welds, see Figure 7.

Figure 7 : Typical butt welds

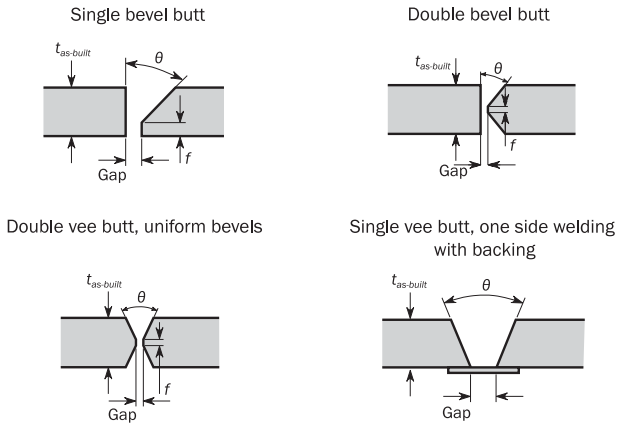

3.2 Thickness difference

3.2.1 Taper

In the case of welding of plates with difference in as-built thickness greater than 4 mm, the thicker plate is normally to be tapered. The taper has to have a length of not less than 3 times the difference in as-built thickness. If the width of groove is not less than 3 times the difference the transition taper is to be avoided.

4 OTHER TYPES OF JOINTS

4.1 Lapped joints

4.1.1 Areas

Lap joint welds may be adopted in very specific cases subject to the approval of the Society. Lap joint welds may be adopted for the following:

- Peripheral connections of doublers.
- Internal structural elements subject to very low stresses.

4.1.2 Overlap width

Where overlaps are adopted, the width of the overlap is not to be less than three times, but not greater than four times the as-built thickness of the plates being joined, see Figure 8. Where the as-built thickness of the thinner plate being joined has a thickness of 25 mm or more, the overlap will be subject to special consideration.

Figure 8 : Fillet weld in lapped joint

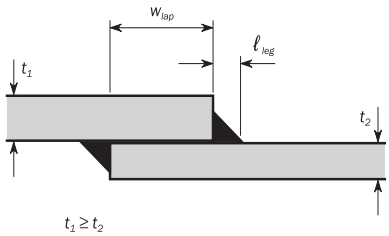

4.1.3 Overlaps for lugs

The overlaps for lugs and collars in way of cut-outs for the passage of stiffeners through webs and bulkhead plating are not to be less than three times the thickness of the lug but need not be greater than 50 mm.

4.1.4 Lapped end connections

Lapped end connections are to have continuous welds on each edge with leg length, ℓ_{leg} in mm, as shown on Figure 8 such that the sum of the two leg lengths is not less than 1.5 times the as-built thickness of the thinner plate.

4.1.5 Overlapped seams

Overlapped seams are to have continuous welds on both edges, of the sizes required by [2.5.2] for the boundaries of tank/hold or watertight bulkheads. Seams for plates with as-built thickness of 12.5 mm or less, which are clear of tanks/holds, may have one edge with intermittent welds in accordance with [2.5.2] for watertight bulkhead boundaries.

4.2 Slot welds

4.2.1

Slot welds may be adopted in very specific cases subject to the approval of the Society. However, slot welds of doublers on the outer shell and strength deck are not permitted within 0.6 *L* amidships.

4.2.2

Slots are to be well-rounded and have a minimum slot length, ℓ_{slot} of 75 mm and width, w_{slot} of twice the as-built plate thickness. Where used in the body of doublers and similar locations, such welds are in general to be spaced a distance, s_{slot} of 2 ℓ_{slot} to 3 ℓ_{slot} but not greater than 250 mm, see Figure 9. The size of the fillet welds is to be determined from second formula shown in [2.5.2] using $t_{as\text{-}built}$ of the thinner plate and a weld factor of 0.48.

Figure 9 : Slot welds

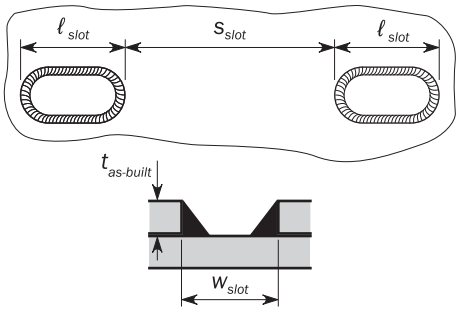

4.2.3 Closing plates

For the connection of plating to internal webs, where access for welding is not practicable, the closing plating may be attached by slot welds to face plates fitted to the webs.

4.2.4

Slots are to be well-rounded and have a minimum slot length, ℓ_{slot} of 90 mm and a minimum width, w_{slot} of twice the as-built plate thickness. Slots cut in plating are to have smooth, clean and square edges and are in general to be spaced a distance, s_{slot} not greater than 140 mm. Slots are not to be filled with welding.

4.3 Stud and lifting lug welds

4.3.1

Where permanent or temporary studs or lifting lugs are to be attached by welding to main structural parts in areas subject to high stress, the proposed locations are to be submitted for approval.

5 CONNECTION DETAILS

5.1 Bilge keels

5.1.1

The ground bar is to be connected to the shell with a continuous fillet weld, and the bilge keel to the ground bar with a continuous fillet weld in accordance with Table 5.

Table 5 : Connections of bilge keels

Structural items being joined	Leg length of weld, in mm	
	At ends (1)	Elsewhere
Ground bar to the shell	0.62 t_{1as_built}	0.48 t_{1as_built}
Bilge keel web to ground bar	0.48 t_{2as_built}	0.30 t_{2as_built}

$t_{1as\text{-}built}$: As-built thickness of ground bar, in mm.
$t_{2as\text{-}built}$: As-built thickness of web of bilge keel, in mm.
(1) See zone "b" in Ch 3, Sec 6, Figure 19 and Ch 3, Sec 6, Figure 20 for definition of "ends".

5.1.2

Butt welds, in the bilge keel and ground bar, are to be well clear of each other and of butts in the shell plating as shown in Figure 10. In general, shell butts are to be flush in way of the ground bar and ground bar butts are to be flush in way of the bilge keel. Direct connection between ground bar butt welds and shell plating is not permitted. This may be obtained by use of removable backing.

5.1.3

The ground bar is to be continuously fillet welded with a leg length as given in Table 5. At the ends of the ground bar, the leg length is to be increased as given in Table 5, without exceeding the as-built thickness of the ground bar as shown in Figure 10. The welded transition at the ends of the ground bar to the plating connection should be formed with the weld flank angle of 45 deg or less.

5.1.4

In general, scallops and cut-outs are not to be used. Crack arresting holes are to be drilled in the bilge keel butt welds as close as practicable to the ground bar. The diameter of the hole is to be greater than the width of the butt weld and is to be a minimum of 25 mm. Where the butt weld has been subject to non-destructive examination, the crack arresting hole may be omitted.

Figure 10 : Bilge keel

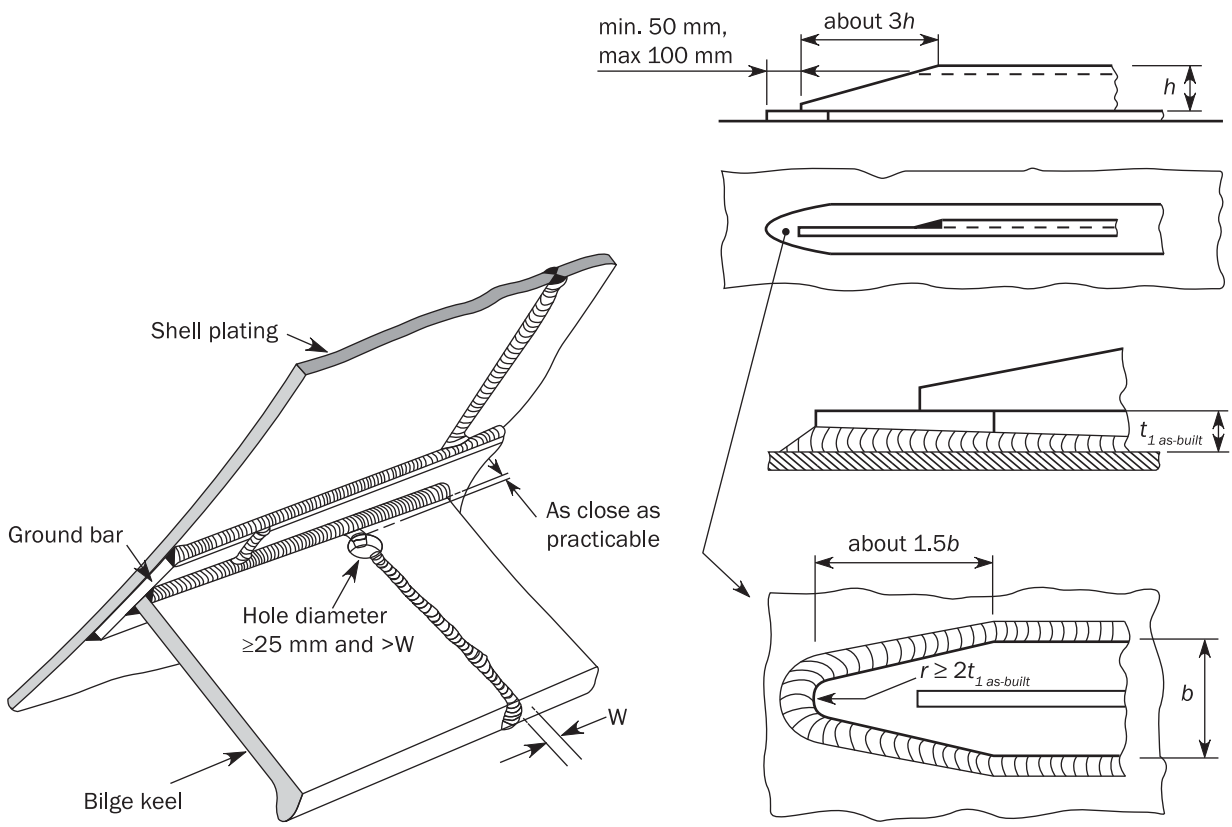

5.2 Bulk carrier side frames

5.2.1

The following requirements are applicable to side frames, end brackets and tripping brackets of single side skin bulk carriers.

5.2.2

For zones '*a*' and '*b*' as shown in Figure 11, double continuous fillet welding should be used with leg lengths of 0.62 $t_{as\text{-}built}$ and 0.57 $t_{as\text{-}built}$ respectively, where $t_{as\text{-}built}$ is the as-built thickness of the thinner of two connected members, in mm.

5.2.3

Double continuous welding is to be adopted for the connections of tripping brackets with side shell frames and plating. The leg length, ℓ_{leg} in mm, for these connections should be taken as:

- $0.5\ t_{as_built} + 1.0$ if $t_{as\text{-}built} < 10$
- $0.4\ t_{as_built} + 2.0$ if $10 \le t_{as\text{-}built} < 20$
- $0.3\ t_{as_built} + 4.0$ if $t_{as\text{-}built} \ge 20$.

In these formulas $t_{as\text{-}built}$ is as-built thickness of the abutting plate.

Figure 11 : Bulk carrier side frames

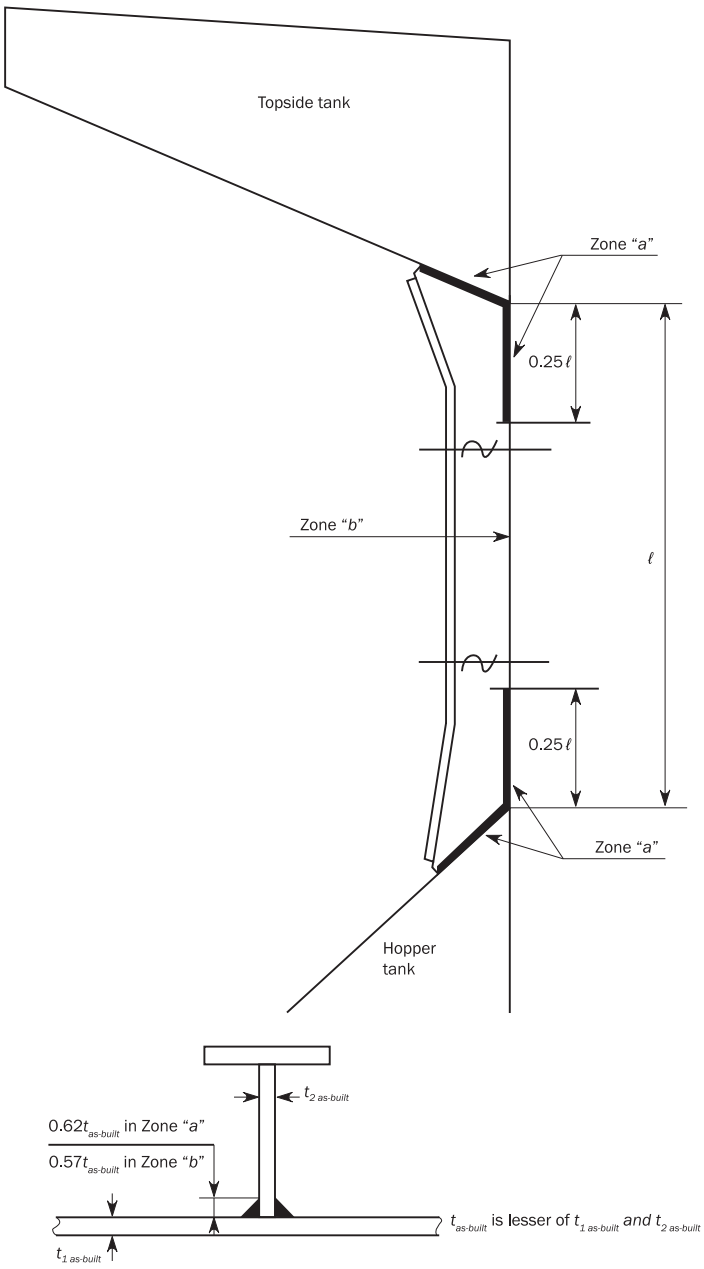

5.3 End connections of pillars and cross ties

5.3.1

The end connections of pillars and cross ties are to have an effective fillet weld area, in cm^2, (weld throat multiplied by weld length) not less than:

$$A_{weld} = f_3 \left(\frac{235}{R_{eH_weld}} \right)^{0.75} F$$

where:

F : Design load, for the structure under consideration, in kN.

f_3 : Coefficient equal to:

f_3 = 0.05 when pillar or cross tie is in compression only.

f_3= 0.14 when pillar or cross tie is in tension.

5.4 Abutting plates with small angles

5.4.1

Where the angle θ between the abutting plate and the connected plate is less than 75 deg as shown in Figure 12, the size of fillet welds ℓ_θ, in mm, for the side of larger angle is to be increased in accordance with:

$$\ell_\theta = \frac{\ell_{leg}}{\sqrt{2} \sin \frac{\theta}{2}}$$

where:

ℓ_{leg} : Leg length of fillet weld, in mm, as defined in [2.5.2].

θ : Connecting angle, in deg, as shown in Figure 12.

Figure 12 : Connecting angle

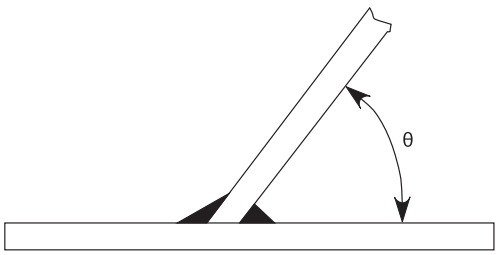

5.4.2

Connections of main strength members where θ is less than 45 deg, see Figure 12, may be applied only in dry spaces and voids.

PART 1 CHAPTER 13

SHIP IN OPERATION - RENEWAL CRITERIA

Table of Contents

SECTION 1
Principles and Survey Requirements
1 Principles
2 Hull Survey Requirements
SECTION 2
Acceptance Criteria
1 General
2 Renewal Criteria

SECTION 1
PRINCIPLES AND SURVEY REQUIREMENTS

1 PRINCIPLES

1.1 Application

1.1.1

The purpose of this chapter is to provide criteria for the allowable thickness diminution of ships' hull structures.

1.1.2

The criteria apply only to ships in operation that are classed in accordance with these Rules.

1.1.3

Thickness measurement is to be used to assess ships' hull structures against the specified renewal criteria.

1.1.4

The hull survey requirements are those given, as applicable, in the Rules and/or documents of the individual Society which incorporate:

- UR Z10.2 for single side skin bulk carriers.
- UR Z10.4 for double hull oil tankers.
- UR Z10.5 for double side skin bulk carriers.

1.2 Corrosion allowance concept

1.2.1 Corrosion allowance

Corrosion allowance is comprised of two aspects: local and global corrosion, as defined in Ch 3, Sec 2, [1.1.2].

1.2.2 Assessment

Assessment against both local and global corrosion renewal criteria is required during the operational life of ships.

Assessment against the newbuilding requirements which incorporate corrosion additions, given in Ch 3, Sec 3, and which consider all relevant loads and limit states, e.g. yielding, buckling, and fatigue is not required during the operational life of ships, provided that the measured thickness of any structural members remain greater than the renewal thickness specified in Ch 13, Sec 2, [2].

1.2.3 Steel renewal

Steel renewal is required if either the local or global corrosion allowance is exceeded.

1.3 Requirements for documentation

1.3.1 Plans

The plans to be supplied onboard the ship, as required in Ch 1, Sec 3, are to include, for each structural element, both the as-built and renewal thickness as defined in Ch 13, Sec 2. Any thickness for voluntary addition is also to be clearly indicated on the plans.

For the list of plans and information to be supplied onboard the ship, reference is made to the Rules and/or documents of the individual Society which incorporate IACS UR Z10.2, Z10.4 or Z10.5 as applicable.

1.3.2 Hull girder sectional properties

The Midship section plan to be supplied onboard the ship is to include the minimum required hull girder sectional properties, as defined in Ch 5, Sec 1, for the representative transverse sections of all cargo holds.

2 HULL SURVEY REQUIREMENTS

2.1 General

2.1.1 Minimum hull survey requirements

The minimum hull survey requirements including thickness measurements for the maintenance of class are given in the Rules and/or documents of the individual Society which incorporate IACS UR Z10.2, Z10.4 and Z10.5.

SECTION 2
ACCEPTANCE CRITERIA

SYMBOLS

$t_{as\text{-}built}$: As built thickness, in mm.

t_c : Corrosion addition in mm, as defined in Ch 3, Sec 2.

t_{res} : Reserve thickness, taken equal to 0.5 mm.

t_{vol_add} : Thickness for voluntary addition, in mm.

1 GENERAL

1.1 Application

1.1.1

This section gives requirements for the application of the acceptance criteria.

1.2 Definition

1.2.1 Deck zone

The deck zone includes all the following items contributing to the hull girder strength:

- For bulk carriers: elements above or crossed by the 0.9 *D* level line above the baseline such as:
  - Strength deck plating.
  - Deck stringer.
  - Sheer strake.
  - Side shell plating.
  - Inner hull and other longitudinal bulkhead plating, if any.
  - Topside tank sloped plating, including horizontal and vertical strakes.
  - Longitudinal stiffeners, girders and stringers connected to the above mentioned plating.
- For oil tankers:
  - Strength deck plating.
  - Deck stringer.
  - Sheer strake.
  - Inner hull and other longitudinal bulkheads upper most strake.
  - Longitudinal stiffeners, girders and stringers connected to the above mentioned plating.

1.2.2 Bottom zone

The bottom zone includes the following items contributing to the hull girder strength:

- For bulk carriers: elements up to the upper level of the hopper sloping plating or up to and including the inner bottom plating if there is no hopper tank:
  - Keel plate.
  - Bottom plating.
  - Bilge plating.
  - Bottom girders.
  - Inner bottom plating.
  - Hopper tank sloping plating, and horizontal plating, if any.
  - Longitudinal stiffeners connected to the above mentioned plating.
  - Side shell plating.
- For oil tankers:
  - Keel plate.
  - Bottom plating.
  - Bilge plating.
  - Longitudinal bulkheads lower strake.
  - Bottom girders.
  - Longitudinal stiffeners connected to the above mentioned plating.

1.2.3 Neutral axis zone

The neutral axis zone includes the following items between the deck zone and the bottom zone, as for example:

- Side shell plating.
- Inner hull plating and longitudinal bulkheads, if any.
- Topside tank sloped plating.

For the longitudinal strength members forming the web of the hull girder which are inclined to the vertical, the area of the member to be included in the zone area is to be based on the projected area onto the vertical plane.

2 RENEWAL CRITERIA

2.1 Local corrosion

2.1.1 Renewal thickness of local structural elements

Local structural elements include local supporting members and primary supporting members.

Steel renewal is required if the measured thickness, t_m in mm, is less than the renewal thickness, t_{ren} defined as:

$$t_{ren} = t_{as-built} - t_c - t_{vol_add}$$

2.1.2 Renewed area

Areas which need to be renewed based on the renewal criteria in [2.1.1] are, in general, to be repaired with inserted material which is to have the same or greater grade and yield stress as the original, and to have a thickness, t_{repair} in mm, not less than:

$$t_{repair} = t_{as-built} - t_{vol_add}$$

2.1.3 Alternative solutions

Alternative solutions may be adopted in accordance with the requirements of the Rules and/or documents of the individual Society which incorporate IACS UR Z10.2, Z10.4 and Z10.5, where the measured thickness, t_m is such as:

$t_{ren} \leq t_m < t_{ren} + t_{res}$

2.2 Global corrosion

2.2.1 Application

The ship's longitudinal strength is to be evaluated by using the thickness of structural members measured, renewed and reinforced, as appropriate, during special surveys, for ships over 10 years of age.

2.2.2 Renewal criteria

The hull girder strength criteria are given as detailed below.

a) Deck and bottom zones:
The current hull girder section modulus at deck and at bottom determined with the thickness measurements are not to be less than 90% of the section modulus calculated according to Ch 5, Sec 1 with the gross offered thickness.
Alternatively, the current sectional areas of the bottom zone and of the deck zone which are the sum of the measured item areas of the considered zones are not to be less than 90% of the sectional area of the corresponding zones determined with the gross offered thickness.

b) Neutral axis zone:
The current sectional area of the neutral axis zone, which is the sum of the measured plating areas of this zone, is not to be less than the sectional area of the neutral axis zone calculated with the gross offered thickness minus 0.5 t_c.

If the actual reduction of the gross offered thickness of all items, of a given transverse section, which contribute to the hull girder strength is less than 10% for the deck and bottom zones and $0.5t_c$ for the neutral axis zone, the hull girder strength criteria of this transverse section is satisfied and the calculations of the different zone areas with measured thicknesses need not be carried out.

The gross offered thickness is defined in Ch 3, Sec 2.

PART 2

SHIP TYPES

Table of Contents

Chapter 1: Bulk Carriers 735

Chapter 2: Oil Tankers 789

Table of Contents

Chapter 1: Bulk Carriers 735

SECTION 1
General Arrangement Design 737
1 Forecastle 737
2 Access Arrangements 738

SECTION 2
Structural Design Principles 739
1 Application 739
2 Corrosion Protection 739
3 Structural Detail Principles 740

SECTION 3
Hull Local Scantlings 746
1 Cargo Hold Side Frames of Single Side Bulk Carriers 746
2 Structure Loaded by Steel Coils on Wooden Dunnage 750
3 Transverse Vertically Corrugated Watertight Bulkheads Separating Cargo Holds in Flooded Condition 752
4 Allowable Hold Loading for BC-A & BC-B Ships in Flooded Conditions 758

SECTION 4
Hull Local Scantlings for Bulk Carriers L<150m 762
1 General 762
2 Struts Connecting Stiffeners 762
3 Transverse Corrugated Bulkheads of Ballast Holds 763
4 Primary Supporting Members 764

SECTION 5
Cargo Hatch Covers 771
1 General 771
2 Arrangements 772
3 Width of Attached Plating 774
4 Load Model 774
5 Strength Check 775
6 Hatch Coamings 781
7 Weathertightness, Closing Arrangement, Securing Devices and Stoppers 784
8 Drainage 787

SECTION 6
Additional Class Notation Grab 788
1 General 788
2 Scantlings 788

Chapter 2: Oil Tankers 789

SECTION 1
General Arrangement Design 791
1 General 791
2 Separation of Cargo Tanks 791
3 Double Hull Arrangement 791
4 Access Arrangements 791

SECTION 2
Structure Design Principles 793
1 Corrosion Protection 793

SECTION 3
Hull Local Scantling 794
1 Primary Supporting Members in Cargo Hold Region 794
2 Vertically Corrugated Bulkheads 810

SECTION 4

Hull Outfitting **816**
1 Supporting Structures For Components Used In Emergency Towing Arrangements 816
2 Miscellaneous Deck Attachments 817
3 Guard Rails and Bulwarks 818

PART 2 CHAPTER 1

BULK CARRIERS

Table of Contents

SECTION 1
General Arrangement Design
1 Forecastle
2 Access Arrangements
SECTION 2
Structural Design Principles
1 Application
2 Corrosion Protection
3 Structural Detail Principles
SECTION 3
Hull Local Scantlings
1 Cargo Hold Side Frames of Single Side Bulk Carriers
2 Structure Loaded by Steel Coils on Wooden Dunnage
3 Transverse Vertically Corrugated Watertight Bulkheads Separating Cargo Holds in Flooded Condition
4 Allowable Hold Loading for BC-A & BC-B Ships in Flooded Conditions
SECTION 4
Hull Local Scantlings for Bulk Carriers L<150m
1 General
2 Struts Connecting Stiffeners
3 Transverse Corrugated Bulkheads of Ballast Holds
4 Primary Supporting Members
SECTION 5
Cargo Hatch Covers
1 General
2 Arrangements
3 Width of Attached Plating
4 Load Model
5 Strength Check
6 Hatch Coamings
7 Weathertightness, Closing Arrangement, Securing Devices and Stoppers
8 Drainage
SECTION 6
Additional Class Notation Grab
1 General
2 Scantlings

SECTION 1
GENERAL ARRANGEMENT DESIGN

1 FORECASTLE

1.1 General

1.1.1

An enclosed forecastle is to be fitted on the freeboard deck.

The aft bulkhead of the enclosed forecastle is to be fitted in way or aft of the forward bulkhead of the foremost hold, as shown in Figure 1.

However, if this requirement hinders hatch cover operation, the aft bulkhead of forecastle may be fitted forward of the forward bulkhead of the foremost cargo hold provided the forecastle length is not less than 7% of ship length for freeboard as specified in Pt 1, Ch 1, Sec 4, [3.1.2] abaft the fore side of stem.

Figure 1 : Forecastle arrangement

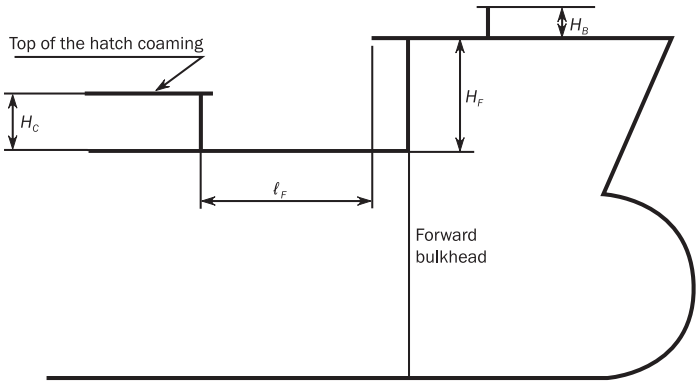

1.1.2

The forecastle height, H_F above the main deck is not to be less than the greater of the following values:

- The standard height of a superstructure as specified in Pt 1, Ch 1, Sec 4, [3.3].
- H_C + 0.5 m, where H_C is the height of the forward transverse hatch coaming of the foremost cargo hold, i.e. cargo hold No. 1.

1.1.3

All points of the aft edge of the forecastle deck are to be located at a distance less than or equal to ℓ_F, taken as:

$$\ell_F = 5\sqrt{H_F - H_C}$$

from the hatch coaming plate.

1.1.4

A breakwater is not to be fitted on the forecastle deck with the purpose of protecting the hatch coaming or hatch covers. If fitted for other purposes, it is to be located such that its upper edge at centreline is not less than $H_B / \tan 20°$ forward of the aft edge of the forecastle deck, where H_B is the height of the breakwater above the forecastle, see Figure 1.

2 ACCESS ARRANGEMENTS

2.1 Special arrangements for bulk carriers

2.1.1

Where a duct keel or pipe tunnel is fitted, provision is to be made for at least two exits to the open deck arranged at a maximum distance from each other.

The aft access may lead from the engine room to the duct keel. Where an aft access is provided from the engine room to the duct keel, the access opening to the duct keel is to be provided with watertight hatch cover, cover plate or door.

Ventilation may be aided by the use of mechanical means as required.

2.1.2

Where a watertight door is fitted for access to the duct keel, the scantlings of the watertight door are to comply with the requirements of the individual Society.

SECTION 2
STRUCTURAL DESIGN PRINCIPLES

SYMBOLS

For symbols not defined in this section, refer to Pt 1, Ch 1, Sec 4.

1 APPLICATION

1.1

1.1.1

This section applies to structures in all parts of bulk carriers, in addition to requirements given in Pt 1, Ch 3, Sec 6.

2 CORROSION PROTECTION

2.1 General

2.1.1 Void double side skin spaces

Void double side skin spaces are to have a corrosion protective system fitted in accordance with [2.2].

2.1.2 Cargo holds and ballast holds

Cargo holds and ballast holds are to have a corrosion protective system fitted in accordance with [2.3].

2.2 Protection of void double side skin spaces

2.2.1

Void double side skin spaces in the cargo area for ships having a freeboard length L_{LL} of not less than 150 m are to have an efficient corrosion prevention system, such as hard protective coatings or equivalent.

2.3 Protection of cargo hold spaces

2.3.1 Coating

It is the responsibility of the builder and of the owner to choose coatings suitable for the intended cargoes, in particular for the compatibility with the cargo.

2.3.2 Application

All internal and external surfaces of hatch coamings and hatch covers, and all internal surfaces of cargo holds (side and transverse bulkheads), excluding the inner bottom area and part of the hopper tank sloping plate and lower stool sloping plate, are to have an efficient protective coating, of an epoxy type or equivalent, applied in accordance with the manufacturer's recommendation.

The side and transverse bulkhead areas to be coated are specified in [2.3.3] and [2.3.4] respectively.

2.3.3 Side areas to be coated

The areas to be coated are the internal surfaces of:

- The inner side plating.
- The internal surfaces of the topside tank sloping plates.
- The internal surfaces of the hopper tank sloping plates for a distance of 300 mm below the frame end bracket for holds of single side skin construction, or below the hopper tank upper end for holds of double side skin construction.

These areas are shown in Figure 1.

Figure 1 : Side areas to be coated

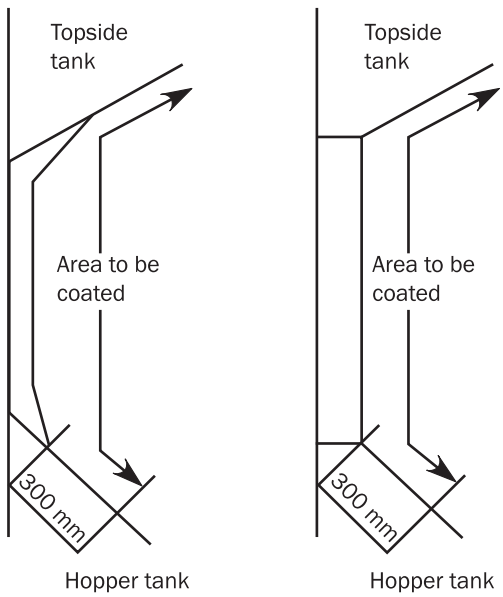

2.3.4 Transverse bulkhead areas to be coated

The areas of transverse bulkheads to be coated are all the areas located above an horizontal level located at a distance of 300 mm below the frame end bracket for holds of single side skin construction or below the hopper tank upper end for holds of double side skin construction.

3 STRUCTURAL DETAIL PRINCIPLES

3.1 Double bottom structure

3.1.1 Application

In addition to the requirements provided in Pt 1, Ch 2, Sec 3, [2], the requirements of this sub-article are applicable to the following ships:

- All bulk carriers of less than 150 m in length,
- Bulk carriers with a length of 150 m or above, with one or more cargo holds arranged for carriage of water ballast.

3.1.2 Double bottom height

Height of double bottom in cargo area, d_{DB}, in m, measured from keel line at mid-length of each cargo hold is not to be less than:

$$d_{DB} = 0.032B + 0.19\sqrt{T_{SC}}$$

A lower double bottom height may be accepted, provided all of the following requirements are satisfied:

- The spacing of adjacent girders is not to be greater than 4.6 m or 5 times the spacing of bottom or inner bottom stiffeners, whichever is the smaller.
- The spacing of floors is not to be greater than 3.5 m or 4 times the side frame spacing, whichever is the smaller. Where side frames are not transverse, the nominal frame spacing as specified by the designer is to be used.

3.1.3 Girder spacing

The spacing of adjacent girders is generally not to be greater than 4.6 m or 5 times the spacing of bottom or inner bottom stiffeners, whichever is the smaller.

3.1.4 Floor spacing

The spacing of floors is generally not to be greater than 3.5 m or 4 times the side frame spacing, whichever is the smaller. Where side frames are not transverse, the nominal frame spacing as specified by the designer is to be used.

3.2 Single side structure

3.2.1 Application

This article applies to the single side structure with transverse framing of single side bulk carrier.

If single side structure is supported by transverse or longitudinal primary supporting members, the requirements in Pt 1, Ch 3, Sec 6, [8] apply to these primary supporting members as regarded to ones in double side skin.

3.2.2 General arrangement

Side frames are to be arranged at every frame space.

If air pipes are passing through the cargo hold, they are to be protected by appropriate measures to avoid a mechanical damage.

3.2.3 Side frames

Frames are to be built-up symmetrical sections with integral upper and lower brackets and are to be arranged with soft toes.

The side frame flange is to be curved (not knuckled) at the connection with the end brackets. The radius of curvature is not to be less than r, in mm, given by:

$$r = \frac{0.4\ b_f^2}{t_f + t_c}$$

where:

t_c : Corrosion addition, in mm, specified in Pt 1, Ch 3, Sec 3.

b_f, t_f : Flange width and net thickness of the curved flange, in mm. The end of the flange is to be sniped.

In ships less than 190 m in length, mild steel frames may be asymmetric and fitted with separate brackets. The face plate or flange of the bracket is to be sniped at both ends. Brackets are to be arranged with soft toes.

The dimensions of side frames are defined in Figure 2.

Figure 2 : Dimensions of side frames

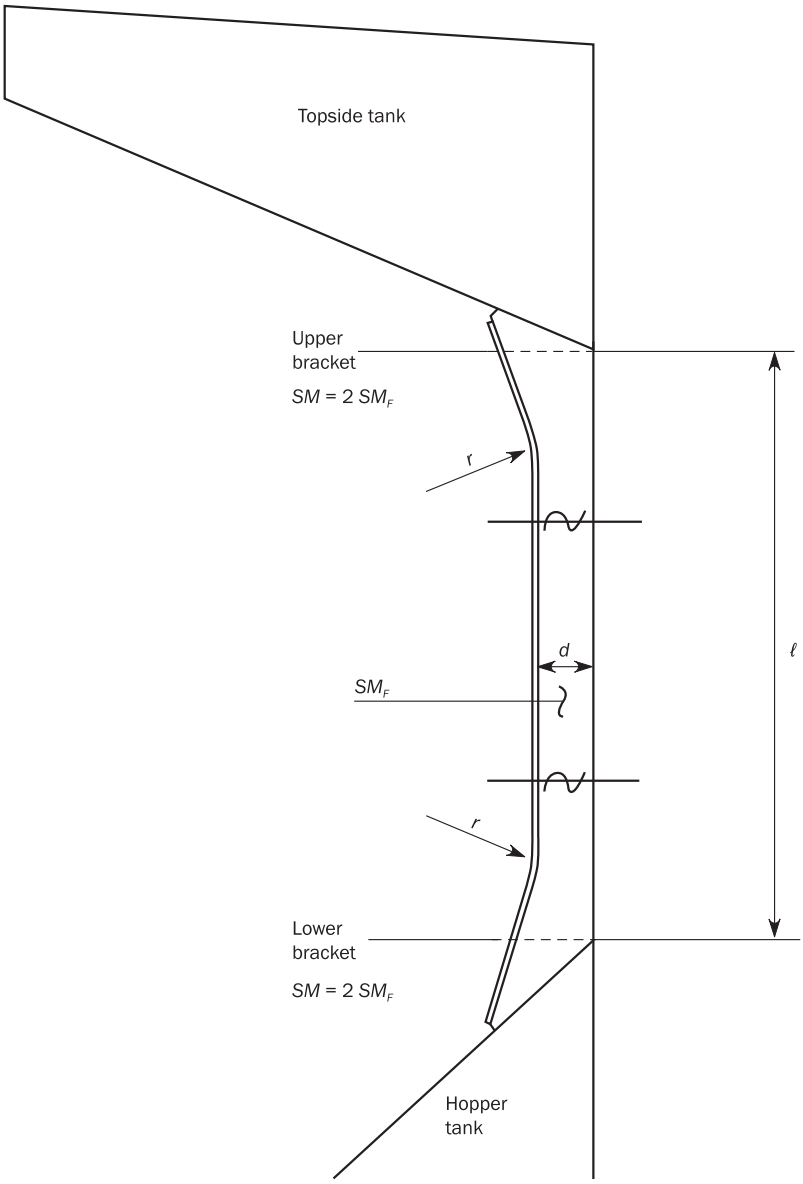

Figure 3 : Dimensions of lower and upper brackets

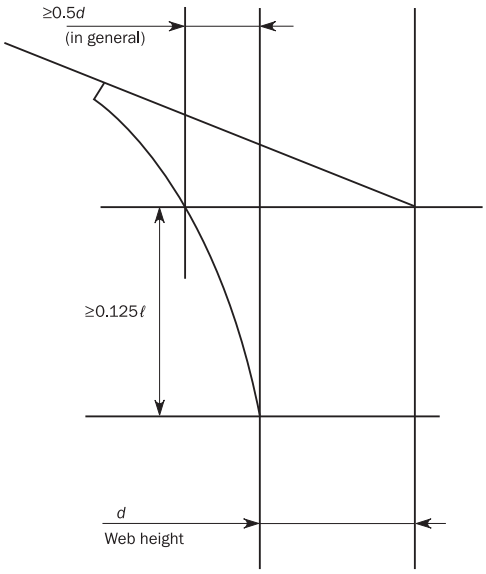

3.2.4 Upper and lower brackets

The face plates or flange of the brackets is to be sniped at both ends. Brackets are to be arranged with soft toes. The as-built thickness of the brackets is not to be less than the as-built thickness of the side frame webs to which they are connected.

The dimensions (in particular the height and length) of the lower brackets and upper brackets are not to be less than those shown in Figure 3.

3.2.5 Tripping brackets

In way of the foremost hold and in the holds of BC-A ships, side frames of asymmetrical section are to be fitted with tripping brackets at every two frames, as shown in Figure 4.

The as-built thickness of the tripping brackets is not to be less than the as-built thickness of the side frame webs to which they are connected.

Double continuous welding is to be adopted for the connections of tripping brackets with side shell frames and plating.

Figure 4 : Tripping brackets to be fitted in way of foremost hold

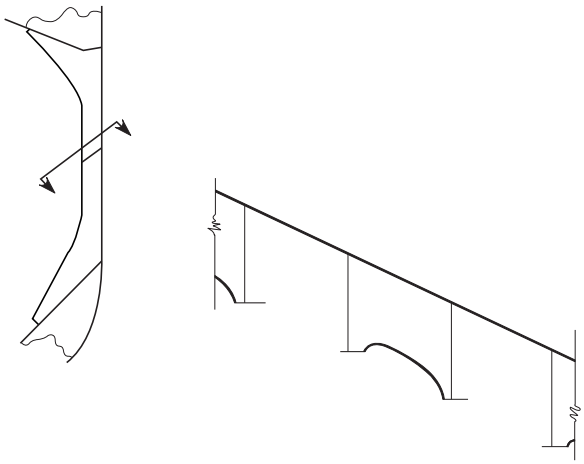

3.2.6 Support structure

Structural continuity with the lower and upper end connections of side frames is to be ensured within hopper and topside tanks by connecting brackets as shown in Figure 5.

Figure 5 : Example of support structure for lower end

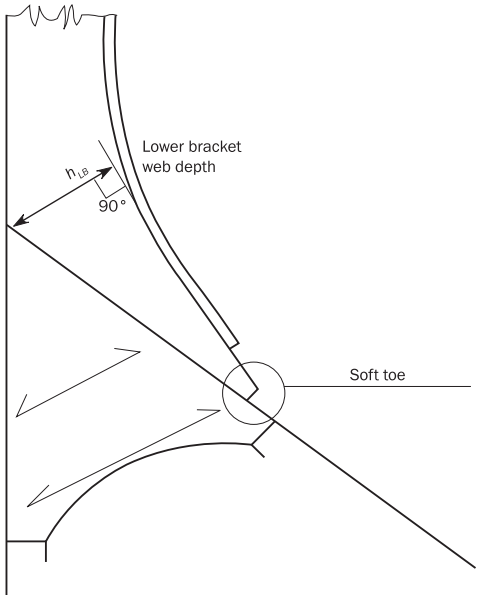

3.3 Deck structures

3.3.1 Web frame spacing in topside tanks

For bulk carriers less than 150 m in length, the spacing of web frames in topside tanks is generally not to be greater than 6 frame spaces.

3.3.2 Cross deck between hatches of bulk carriers

Inside the line of openings, where a transversely framed structure is adopted for the cross deck structures, hatch end beams and cross deck beams are to be adequately supported by girders and extended outward to the second longitudinal from the hatch side girders towards the deck side. Where the extension of girders outward is impracticable, intercostal stiffeners are to be fitted between the hatch side girder and the second longitudinal and checks of the structure are to be performed in compliance with the requirements in Pt 1, Ch 7 or by means deemed appropriate by the Society.

The transverse primary members supporting the cross deck are to be supported by side or topside tank primary supporting members.

Smooth connection of the strength deck at side with the transversely framed cross deck is to be ensured by a plate of intermediate thickness.

3.3.3 Topside tank structures

The topside tank sloping plates are to be longitudinally framed.

Topside tank structures, where fitted, are to extend as far as possible within the machinery space and are to be adequately tapered.

Where a double side primary supporting member is fitted outside the plane of the topside tank web frame, special attention is to be paid to structural continuity.

3.3.4 Openings in strength deck - Corner of hatchways

a) Within the cargo hold region

For cargo hatchways located within the cargo hold region, insert plates, the thicknesses of which are to be determined according to the formula given after, are to be fitted in way of corners where the plating cut-out has a circular profile.

The radius of circular corners is not to be less than 5% of the hatch width, where a continuous longitudinal deck girder is fitted below the hatch coaming.

Corner radius, in the case of the arrangement of two or more hatchways athwartship, is considered by the Society on a case-by-case basis.

For hatchways located within the cargo hold region, insert plates are, in general, not required in way of corners where the plating cut-out has an elliptical or parabolic profile and the half axes of elliptical openings, or the half lengths of the parabolic arch, are not less than:

- 1/20 of the hatchway width or 600 mm, whichever is the lesser, in the transverse direction.
- Twice the transverse dimension, in the fore and aft direction.

Where insert plates are required, their net thickness is to be obtained, in mm, from the following formula:

$$t_{INS} = \left(0.8 + 0.4\frac{b}{\ell}\right) t_{off}$$

without being taken less than t_{off} or greater than 1.6 t_{off}.

where:

ℓ : Width, in m, in way of the corner considered, of the cross deck strip between two consecutive hatchways, measured in the longitudinal direction, see Pt 1, Ch 3, Sec 6, Figure 15.

b : Width, in m, of the hatchway considered, measured in the transverse direction, see Pt 1, Ch 3, Sec 6, Figure 15.

t_{off} : Offered net thickness, in mm, of the deck at the side of the hatchways.

For the extreme corners of end hatchways, insert plates are required. The net thickness of these insert plates is to be 60% greater than the net offered thickness of the adjacent deck plating. A lower thickness may be accepted by the Society on the basis of calculations showing that stresses at hatch corners are lower than permissible values.

Where insert plates are required, the arrangement is shown in Pt 1, Ch 9, Sec 6, Table 15, in which d_1, d_2, d_3 and d_4 are to be greater than the stiffener spacing.

For ships having length L of 150 m or above, the corner radius, the thickness and the extent of insert plate may be determined by the results of a direct strength assessment according to Pt 1, Ch 7, including buckling check and fatigue strength assessment of hatch corners according to Pt 1, Ch 8 and Pt 1, Ch 9 respectively. For such type of ships it is recommended to arrange circular hatch corners.

b) Outside the cargo hold region

For hatchways located outside the cargo hold region, a reduction in the thickness of the insert plates in way of corners may be considered by the Society on a case-by-case basis.

3.3.5 Protection against wire rope

Wire rope grooving in way of cargo holds openings is to be prevented by fitting suitable protection such as half-round bar on the hatch side girders (i.e. upper portion of topside tank plates) and hatch end beams in cargo hold and upper portion of hatch coamings.

[RCN1 to 01 JAN 2020]

3.3.6 Protection of cargo hatch opening corners against mechanical damage [RCN1 to 01 JAN 2020]

Specific measures are to be arranged to prevent the hatch opening corners from mechanical damage incurred by coming into direct contact with the vertical grab wire under normal operations.

[RCN1 to 01 JAN 2020]

SECTION 3
HULL LOCAL SCANTLINGS

SYMBOLS

For symbols not defined in this section, refer to Pt 1, Ch 1, Sec 4.

C_{XG}, C_{YS}, C_{YR}, C_{YG}, C_{ZP}, C_{ZR} : Load combination factors, as defined in Pt 1, Ch 4, Sec 2.

d_{shr} : Effective shear depth of the stiffener as defined in Pt 1, Ch 3, Sec 7, [1.4.3].

F_R : Resultant force, in kN, as defined in Pt 1, Ch 4, Sec 6, Table 7.

$F_{sc\text{-}ib\text{-}s}$: Static load, in kN, as defined in Pt 1, Ch 4, Sec 6, [4.3.1]. ℓ is to be substituted by ℓ_{bdg} for stiffeners.

$F_{sc\text{-}ib}$: Total load, in kN, as defined in Pt 1, Ch 4, Sec 6, [4.2.1]. ℓ is to be substituted by ℓ_{bdg} for stiffeners.

$F_{sc\text{-}hs\text{-}s}$: Static load, in kN, as defined in Pt 1, Ch 4, Sec 6, [4.3.2]. ℓ is to be substituted by ℓ_{bdg} for stiffeners.

$F_{sc\text{-}hs}$: Total load, in kN, as defined in Pt 1, Ch 4, Sec 6, [4.2.2]. ℓ is to be substituted by ℓ_{bdg} for stiffeners.

ℓ : Distance, in m, as defined in Pt 1, Ch 4, Sec 6.

ℓ_{bdg} : Effective bending span, in m, as defined in Pt 1, Ch 3, Sec 7, [1.1.2].

ℓ_{lp} : Distance, in m, as defined in Pt 1, Ch 4, Sec 6.

ℓ_{SF} : Side frame span ℓ, in m, as defined in Ch 1, Sec 2, Figure 2, not to be taken less than 0.25 *D*.

P : Design pressure in kN/m^2, for the design load set being considered according to Pt 1, Ch 6, Sec 2, [2] and calculated at the load calculation point defined in Pt 1, Ch 3, Sec 7, [3.2].

P_R : Resultant pressure, in kN/m^2, as defined in Pt 1, Ch 4, Sec 6, Table 7.

s_{CW} : Plate width, in mm, taken as the width of the corrugation flange *a* or the web *c*, whichever is greater, see Pt 1, Ch 3, Sec 6, Figure 21.

s_C : Half pitch, in mm, of the corrugation flange as defined in Pt 1, Ch 3, Sec 6, Figure 21.

1 CARGO HOLD SIDE FRAMES OF SINGLE SIDE BULK CARRIERS

1.1 Strength criteria

1.1.1 Net section modulus and net shear sectional area

The net section modulus *Z*, in cm^3, and the net shear sectional area A_{shr}, in cm^2, in the mid-span area of side frames subjected to lateral pressure are not to be taken less than:

$$Z = 1.125\alpha_m \frac{P\, s\, \ell_{SF}^2}{f_{bdg}\, C_s\, R_{eH}}$$

$$A_{shr} = 5.0 \cdot \alpha_S \frac{P \cdot s\ell_{SF}}{C_t\, \tau_{eH}} \left(\frac{\ell_{SF} - 2\ell_B}{\ell_{SF}}\right) 10^{-3}$$

where:

α_m : Coefficient taken as:

α_m = 0.42 for BC-A ships.

α_m = 0.36 for other ships.

f_{bdg} : Bending coefficient taken as 10.

C_s : Permissible bending stress coefficient for the design load set being considered taken as:

C_s = 0.75 for acceptance criteria set AC-S.

C_s = 0.90 for acceptance criteria set AC-SD.

α_S : Coefficient taken as:

α_S = 1.1 for side frames of empty holds in alternate condition of BC-A ships.

α_S = 1.0 for other side frames.

ℓ_B : Lower bracket length, in m, as defined in Figure 1.

P : Design pressures, in kN/m², for design load sets as defined in Pt 1, Ch 6, Sec 2, Table 1.

C_t : Permissible shear stress coefficient for the design load set being considered, taken as:

C_t = 0.75 for acceptance criteria set AC-S.

C_t = 0.90 for acceptance criteria set AC-SD.

Figure 1 : Side frame lower bracket length

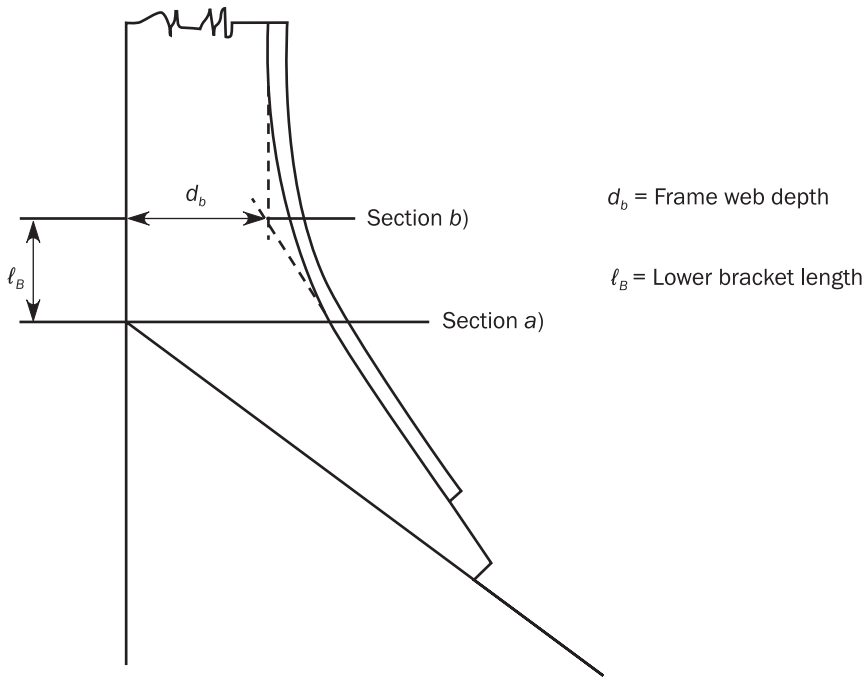

1.1.2 Side frames in ballast holds

In addition to [1.1.1], for side frames in cargo holds designed to carry ballast water in heavy ballast condition, the net section modulus Z, in cm³, and the net web thickness, t_w, in mm, all along the span are to be in accordance with Pt 1, Ch 6, Sec 5 where the span of the side frame is ℓ as defined in Pt 1, Ch 3, Sec 7, [1.1] with consideration to brackets at ends.

1.1.3 Additional strength requirements

The net moment of inertia I, in cm⁴, of the three side frames located immediately abaft the collision bulkhead is not to be taken less than:

$$I = 0.18 \frac{P \ell_{SF}^4}{n}$$

where:

n : Frame number of considered side frame counted from the collision bulkhead to the frame in question, taken equal to 1, 2 or 3.

As an alternative, supporting structures, such as horizontal stringers, are to be fitted between the collision bulkhead and a side frame which is in line with transverse webs fitted in both the topside tank and hopper tank, maintaining the continuity of the forepeak stringers within the foremost hold.

1.2 Lower bracket of side frame

1.2.1

At the level of the lower bracket as shown in Ch 1, Sec 2, Figure 2, the net section modulus of the frame and bracket, or integral bracket, with associated shell plating, is not to be taken less than twice the required net section modulus Z, in cm^3,for the frame mid-span area obtained from [1.1.1].

1.2.2

For holds intended to carry ballast water in heavy ballast condition, the net section modulus Z, in cm^3, at the level of the lower bracket is not to be taken less than twice the greater of the required net section moduli given in [1.1.1] and [1.1.2].

1.2.3

The net thickness t_{LB}, in mm, of the lower bracket is not to be taken less than:

$t_{LB} = t_w + 1.5$

where t_w is the net thickness of the side frame web, in mm.

1.2.4

The net thickness t_{LB} of the lower bracket is to comply with the following formula:

- For symmetrically flanged frames:

$$\frac{h_{LB}}{t_{LB}} \leq 87\sqrt{k}$$

- For asymmetrically flanged frames:

$$\frac{h_{LB}}{t_{LB}} \leq 73\sqrt{k}$$

The web depth h_{LB} of lower bracket is to be measured from the intersection between the hopper tank sloping plating and the side shell plate, perpendicularly to the face plate of the lower bracket as shown in Ch 1, Sec 2, Figure 5.

For the three side frames located immediately abaft the collision bulkhead, where the frames are strengthened in accordance with [1.1.3] and the offered t_{LB} is greater than 1.73 t_w, the t_{LB} applied in [1.2.4] may be taken as t'_{LB} given by:

$$t'_{LB} = (t_{LB}^2 \, t_w)^{1/3}$$

where t_w is the net thickness of the side frame web, in mm, corresponding to A_{shr} determined in accordance to [1.1.1].

1.3 Upper bracket of side frame

1.3.1

At the level of the upper bracket as shown in Ch 1, Sec 2, Figure 2 the net section modulus of the frame and bracket, or integral bracket, with associated shell plating, is not to be taken less than twice the net section modulus Z required for the frame mid-span area obtained from [1.1.1].

1.3.2

For holds intended to carry ballast water in heavy ballast condition, the net section modulus Z, in cm3, at the level of the upper bracket is not to be taken less than twice the greater of the required net sections modulus obtained from [1.1.1] and [1.1.2].

The net thickness t_{UB} of the upper bracket, in mm, is not to be less than the net thickness of the side frame web.

1.4 Provided support at upper and lower connections of side frames

1.4.1 Net section modulus

The net section modulus of the:

- Side shell and hopper tank longitudinals supporting the lower connecting brackets.
- Side shell and topside tank longitudinals supporting the upper connecting brackets.

is to comply with the following formula:

$$\sum_n z_{pli}\, d_i \geq \alpha_T \frac{P\, \ell_{SF}^2\, \ell_1^2}{16 R_{eH}}$$

where:

n : Number of the longitudinal stiffeners on the side shell and hopper/topside tank supporting the lower/upper end connecting bracket of the side frame, as applicable.

$Z_{pl\,i}$: Net plastic section modulus, in cm^3, of the i-th longitudinal stiffener on the side shell or hopper/topside tank supporting the lower/upper end connecting bracket of the side frame, as applicable.

d_i : Distance, in m, of the above i-th longitudinal stiffener from the intersection point of the side shell and hopper/topside tank.

ℓ_1 : Spacing, in m, of transverse supporting webs in hopper/topside tank, as applicable.

R_{eH} : Lowest value of specified yield stress, in N/mm^2, among the materials of the longitudinal stiffeners of side shell and hopper/topside tanks that support the lower/upper end connecting bracket of the side frame.

α_T : Coefficient taken as:

α_T =150 for the longitudinal stiffeners supporting the lower connecting brackets.

α_T = 75 for the longitudinal stiffeners supporting the upper connecting brackets.

1.4.2 Net connection area of brackets

The net connection area of the lower or upper connecting bracket to the supporting longitudinal stiffener is to comply with the following formula:

$$\sum_i A_i d_i R_{eH,\,bkt-i} \geq 0.02 \alpha_T P s\, \ell_{SF}^2 10^{-3}$$

where:

A_i : The offered net connection area of the bracket connecting with the *i*-th longitudinal stiffener, in cm^2.

A_i , α_T : As defined in [1.4.1].

$R_{eH\,,\,bkt-i}$: The specified minimum yield stress of the bracket connecting with the *i*-th longitudinal stiffener, in N/mm^2.

s : The space of the side frame, in mm.

2 STRUCTURE LOADED BY STEEL COILS ON WOODEN DUNNAGE

2.1 General

2.1.1

The net thickness of inner bottom plating, hopper side plating and inner hull plating for ships intended to carry steel coils is to comply with [2.3.1] and [2.4.1] up to a height not less than the one corresponding to the top of upper tier in touch with hopper or inner hull plating.

The net section modulus and the net shear sectional area of longitudinal stiffeners on inner bottom, hopper tank top and inner hull for ships intended to carry steel coils are to comply with [2.3.2] and [2.4.2] up to a height not less than the one corresponding to the top of upper tier in touch with hopper or inner hull plating.

Standard terminology and means for securing of steel coils is described in Figure 2.

Figure 2 : Inner bottom loaded by steel coils

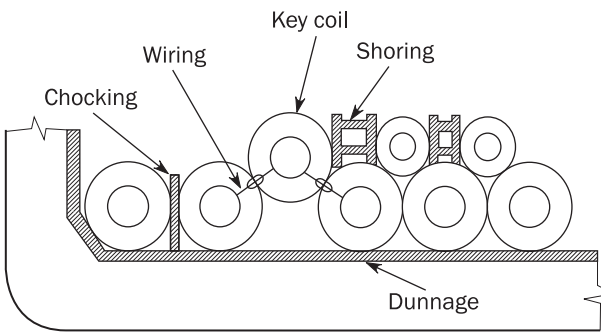

2.2 Load application

2.2.1 Design load sets

The static and dynamic load components are to be determined in accordance with Pt 1, Ch 4, Sec 7, Table 1.

Radius of gyration, k_r, and metacentric height, *GM*, are to be in accordance with Pt 1, Ch 4, Sec 3, Table 2 for the considered loading condition specified in the design load set. The design load sets for steel coil loading is given in Table 1.

Table 1 : Design load sets

Item	Design load set	Load component	Draught	Design load	Loading condition
Inner bottom, hopper sloping plate and inner hull	BC-9	$F_{sc\text{-}ib\text{-}s}$ or $F_{sc\text{-}hs\text{-}s}$	T_{SC}	S	Steel Coil condition
Inner bottom, hopper sloping plate and inner hull	BC-10	$F_{sc\text{-}ib}$ or $F_{sc\text{-}hs}$	T_{SC}	S+D	Steel Coil condition

2.3 Inner bottom

2.3.1 Inner bottom plating

The net thickness t, in mm, of plating of longitudinally framed inner bottom is not to be taken less than:

$$t = K_1\sqrt{\frac{F_{sc-ib-s}\times 10^3}{C_a\ R_{eH}}} \quad \text{for design load set BC-9}$$

$$t = K_1\sqrt{\frac{F_{sc-ib}\times 10^3}{C_a\ R_{eH}}} \quad \text{for design load set BC-10}$$

where:

K_1 : Coefficient taken as:

$$K_1 = \sqrt{\frac{1.7\frac{s}{1000}\ell K_2 - 0.73\left(\frac{s}{1000}\right)^2 K_2^2 - (\ell - \ell_{lp})^2}{2\ell_{lp}\left(2\frac{s}{1000} + 2\ell K_2\right)}}$$

K_2 : Coefficient taken as:

$$K_2 = -\frac{s}{1000\ell} + \sqrt{\left(\frac{s}{1000\ell}\right)^2 + 1.37\left(\frac{1000\ell}{s}\right)^2\left(1 - \frac{\ell_{lp}}{\ell}\right)^2 + 2.33}$$

C_a : Permissible bending stress coefficient, as defined in Pt 1, Ch 6, Sec 4, [1.1.1].

2.3.2 Stiffeners of inner bottom plating

The net section modulus Z, in cm^3, and the net web thickness, t_w, in mm, of single span stiffeners located on inner bottom plating are not to be taken less than:

$$Z = K_3\frac{F_{sc-ib-s}}{8\ C_s\ R_{eH}}10^3 \quad \text{and} \quad t_w = \frac{0.5\ F_{sc-ib-s}\times 10^3}{d_{shr}C_t\tau_{eH}} \quad \text{for design load set BC-9.}$$

$$Z = K_3\frac{F_{sc-ib}}{8\ C_s\ R_{eH}}10^3 \quad \text{and} \quad t_w = \frac{0.5\ F_{sc-ib}\times 10^3}{d_{shr}C_t\tau_{eH}} \quad \text{for design load set BC-10.}$$

where:

K_3 : Coefficient as defined in Table 2.

$K_3 = 2\ell_{bdg} / 3$, when $n_2 > 10$.

n_2 : Number of load points per EPP of the inner bottom, see Pt 1, Ch 4, Sec 6, [4.1.3].

C_s : Permissible bending stress coefficient, as defined in Pt 1, Ch 6, Sec 5, [1.1.2].

Table 2 : Coefficient K_3

n_2	1	2	3	4	5
K_3	ℓ_{bdg}	$\ell_{bdg} - \frac{\ell_{lp}^2}{\ell_{bdg}}$	$\ell_{bdg} - \frac{2\ell_{lp}^2}{3\ell_{bdg}}$	$\ell_{bdg} - \frac{5\ell_{lp}^2}{9\ell_{bdg}}$	$\ell_{bdg} - \frac{\ell_{lp}^2}{2\ell_{bdg}}$

n_2	6	7	8	9	10
K_3	$\ell_{bdg} - \frac{7\ell_{lp}^2}{15\ell_{bdg}}$	$\ell_{bdg} - \frac{4\ell_{lp}^2}{9\ell_{bdg}}$	$\ell_{bdg} - \frac{3\ell_{lp}^2}{7\ell_{bdg}}$	$\ell_{bdg} - \frac{5\ell_{lp}^2}{12\ell_{bdg}}$	$\ell_{bdg} - \frac{11\ell_{lp}^2}{27\ell_{bdg}}$

C_t : Permissible shear stress coefficient for the design load set being considered, to be taken as:

C_t = 0.85 for acceptance criteria set AC-S.

C_t = 1.00 for acceptance criteria set AC-SD.

2.4 Hopper tank and inner hull

2.4.1 Hopper sloping plating and inner hull plating

The net thickness t, in mm, of plating of longitudinally framed bilge hopper sloping plate and inner hull is not to be taken less than:

$$t = K_1 \sqrt{\frac{F_{sc-hs-s}}{C_a R_{eH}} 10^3}$$, applicable for design load set BC-9.

$$t = K_1 \sqrt{\frac{F_{sc-hs}}{C_a R_{eH}} 10^3}$$, applicable for design load set BC-10.

where:

K_1 : Coefficient as defined in [2.3.1].

C_a : As defined in [2.3.1].

2.4.2 Stiffeners of hopper sloping plating and inner hull plating

The net section modulus Z, in cm^3, and the net web thickness, t_w, in mm, of single span ordinary stiffeners located on bilge hopper sloping plate and inner hull plate are not to be taken less than:

$$Z = K_3 \frac{F_{sc-hs-s}}{8\, C_s R_{eH}} 10^3 \quad \text{and} \quad t_w = \frac{0.5\, F_{sc-hs-s}}{d_{shr} C_t \tau_{eH}} \times 10^3$$, applicable for design load set BC-9.

$$Z = K_3 \frac{F_{sc-hs}}{8\, C_s\, R_{eH}} 10^3 \quad \text{and} \quad t_w = \frac{0.5\, F_{sc-hs}}{d_{shr} C_t \tau_{eH}} \times 10^3$$, applicable for design load set BC-10.

where:

K_3 : Coefficient as defined in Table 2.

$K_3 = 2\ell_{bdg} / 3$, when $n_2 > 10$.

C_s, C_t : As defined in [2.3.2].

3 TRANSVERSE VERTICALLY CORRUGATED WATERTIGHT BULKHEADS SEPARATING CARGO HOLDS IN FLOODED CONDITION

3.1 Net thickness of corrugation

3.1.1 Cold formed corrugation

The net plate thickness t, in mm, of transverse vertically corrugated watertight bulkheads separating cargo holds is not to be taken less than:

$$t = 14.9 \cdot 10^{-3}\, s_{CW} \sqrt{\frac{1.05\, P_R}{R_{eH}}}$$

The net thicknesses is also to comply with the requirements given in Pt 1, Ch 6, Sec 4, [1.2.1].

3.1.2 Built-up corrugation

Where the thicknesses of the flange and web of built-up corrugations of transverse vertically corrugated watertight bulkheads separating cargo holds are different, the net plate thicknesses are not to be taken less than that obtained from the following formula.

The net thickness t_N, in mm, of the narrower plating is not to be taken less than:

$$t_N = 14.9 \cdot 10^{-3} s_N \sqrt{\frac{1.05\ P_R}{R_{eH}}}$$

s_N : Plate width, in mm, of the narrower plating.

The net thickness t_W, in mm, of the wider plating is not to be taken less than the greater of the following formulae:

$$t_W = 14.9 \cdot 10^{-3}\ s_{CW} \sqrt{\frac{1.05\ P_R}{R_{eH}}}$$

$$t_W = \sqrt{\frac{4.62\ s_{CW}^{\ 2}\ P_R}{R_{eH}\ 10^4} - t_{NO}^2}$$

where:

t_{NO} : Net offered thickness of the narrower plating, in mm, not to be taken greater than:

$$t_{NO} = 14.9 \cdot 10^{-3}\ s_{CW} \sqrt{\frac{1.05\ P_R}{R_{eH}}}$$

The net thicknesses is also to comply with the requirements given in Pt 1, Ch 6, Sec 4, [1.2.2].

3.1.3 Lower part of corrugation

The net thickness of the lower part of corrugations is to be maintained for a distance of not less than 0.15 ℓ_C measured from the top of the lower stool, or from the inner bottom where no lower stool is fitted. The span of the corrugations ℓ_C, in m, is to be taken as given in Pt 1, Ch 3, Sec 6, [10.4.5].

3.1.4 Middle part of corrugation

The net thickness of the middle part of corrugations is to be maintained for a distance not greater than 0.3 ℓ_C from the bottom of the upper stool, or from the deck if no upper stool is fitted. The net thickness is also to comply with the requirements in [3.2.1] and Pt 1, Ch 6, Sec 4, [1.2].

3.2 Bending, shear and buckling check

3.2.1 Bending capacity and shear capacity

The bending capacity and the shear capacity of the corrugations of transverse watertight corrugated bulkheads separating cargo holds are to comply with the following formulae:

$$0.5 W_{LE} + W_M \geq \frac{M}{0.95\ R_{eH}}\ 10^3$$

$$\tau \leq \frac{R_{eH}}{2}$$

where:

M : Bending moment in a corrugation, in kNm, taken as:

$$M = \frac{F_R\ \ell_C}{8}$$

F_R : Resultant force, in kN, given in Pt 1, Ch 4, Sec 6, [3.1.7].

ℓ_C : Span of the corrugations, in m, as given in Pt 1, Ch 3, Sec 6, [10.4.5].

W_{LE} : Net section modulus, in cm³, of one half pitch corrugation, to be calculated at the lower end of the corrugations according to [3.3], not to be taken greater than:

$$W_{LE,M} = W_G + \frac{Q\ h_G 10^3 - 0.5\ h_G^2\ s_C\ P_R}{R_{eH}}$$

W_G : Net section modulus, in cm³, of one half pitch corrugation, to be calculated in way of the upper end of shedder or gusset plates, as applicable, according to [3.3].

Q : Shear force, in kN, at the lower end of a corrugation, to be taken as:

$$Q = 0.8\ F_R$$

h_G : Height, in m, of shedders or gusset plates, as applicable as shown in Figure 4 to Figure 6.

P_R : Resultant pressure, in kN/m², to be calculated in way of the middle of the shedders or gusset plates, as applicable, according to Pt 1, Ch 4, Sec 6, [3.1.7].

W_M : Net section modulus, in cm³, of one half pitch corrugation, to be calculated at the mid-span of corrugations according to [3.3] without being taken greater than 1.15 W_{LE}.

τ : Shear stress, in N/mm², in the corrugation to be taken as:

$$\tau = 10\ \frac{Q}{A_{shr}}$$

A_{shr} : Net shear area, in cm², of one half pitch corrugation. The calculated net shear area is to consider possible reduced shear efficiency due to non-straight angles between the corrugation webs and flanges. In general, the reduced shear area may be obtained by multiplying the web sectional area by sin φ.

φ : Angle between the web and the flange, see Pt 1, Ch 3, Sec 6, Figure 21.

The net section modulus of the corrugations in the upper part of the bulkhead, as defined in Figure 3, is not to be taken less than 75% of that of the middle part complying with this requirement and Pt 1, Ch 6, Sec 4, [1.2], corrected for different minimum yield stresses.

Figure 3 : Parts of corrugation

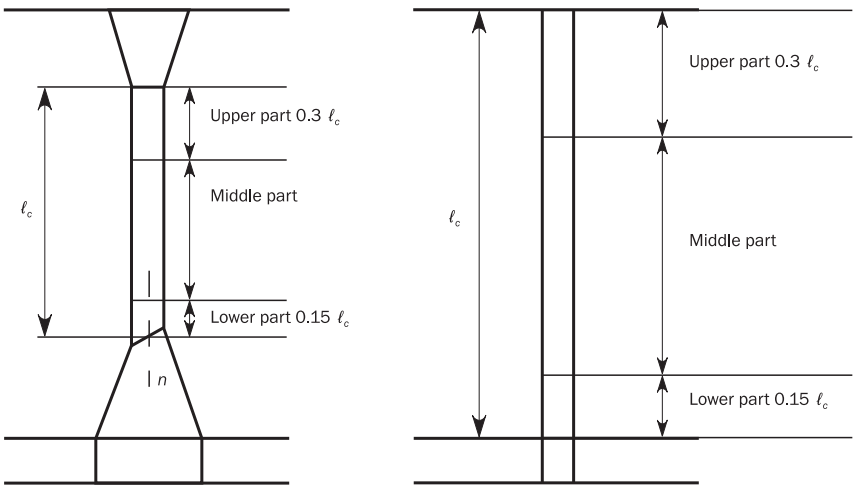

3.2.2 Shear buckling check of the bulkhead corrugation webs

The shear stress τ, calculated according to [3.2.1], is to comply with the following formula:

$\tau \leq \tau_C$

where:

τ_C : Critical shear buckling stress, in N/mm^2, to be taken as:

$$\tau_C = \tau_E \qquad \text{for } \tau_E \le \frac{R_{eH}}{2\sqrt{3}}$$

$$\tau_C = \frac{R_{eH}}{\sqrt{3}}\left(1 - \frac{R_{eH}}{4\sqrt{3}\,\tau_E}\right) \qquad \text{for } \tau_E > \frac{R_{eH}}{2\sqrt{3}}$$

τ_E : Euler shear buckling stress, in N/mm^2, to be taken as:

$$\tau_E = 0.9\, k_t\, E \left(\frac{t_w}{c}\right)^2$$

k_t : Coefficient, to be taken equal to 6.34.

t_w : Net thickness, in mm, of the corrugation webs.

c : Width, in mm, of the corrugation webs as shown in Pt 1, Ch 3, Sec 6, Figure 21.

3.3 Net section modulus at the lower end of the corrugations

3.3.1 Effective flange width

The net section modulus at the lower end of the corrugations is to be calculated with the compression flange having an effective flange width b_{eff} not larger than the following formula:

$$b_{eff} = C_E\, a$$

where:

C_E : Coefficient to be taken equal to:

$$C_E = \frac{2.25}{\beta} - \frac{1.25}{\beta^2} \qquad \text{for } \beta > 1.25$$

$$C_E = 1.0 \qquad \text{for } \beta \le 1.25$$

β : Coefficient to be taken equal to:

$$\beta = \frac{a}{t_f}\sqrt{\frac{R_{eH}}{E}}$$

a : Width, in mm, of the corrugation flange as shown in Pt 1, Ch 3, Sec 6, Figure 21.

t_f : Net flange thickness, in mm.

3.3.2 Webs not supported by local brackets

Unless welded to a sloping stool top plate as defined in [3.3.5], if the corrugation webs are not supported by local brackets below the stool top plate (or below the inner bottom) in the lower part, the section modulus of the corrugations is to be calculated considering the corrugation webs 30% effective.

3.3.3 Effective shedder plates

Provided that effective shedder plates are fitted as shown in Figure 4, when calculating the section modulus at the lower end of the corrugations (Sections '1' in Figure 4), the net area, in cm^2, of flange plates may be increased by I_{SH} to be taken as:

$$I_{SH} = 2.5 \cdot 10^{-3} a \sqrt{t_f\, t_{SH}} \quad \text{without being taken greater than } 2.5\, a\, t_f\, 10^{-3}$$

where:

a : Width, in mm, of the corrugation flange as shown in Pt 1, Ch 3, Sec 6, Figure 21.

t_{SH} : Net shedder plate thickness, in mm.

t_f : Net flange thickness, in mm.

Effective shedder plates are those which:

- are not knuckled,
- are welded to the corrugations and the lower stool top plate according to Pt 1, Ch 12,
- are fitted with a minimum slope of 45°, their lower edge being in line with the lower stool side plating,
- have net thickness not less than 75% of the net required for the corrugation flanges,
- have material properties not less than those required for the flanges.

Figure 4 : Symmetrical and unsymmetrical shedder plates

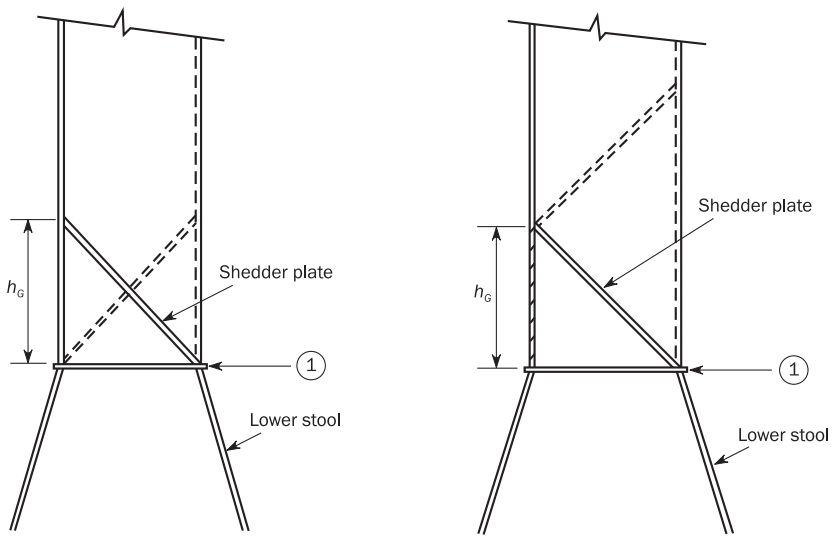

Figure 5 : Symmetrical and unsymmetrical gusset / shedder plates

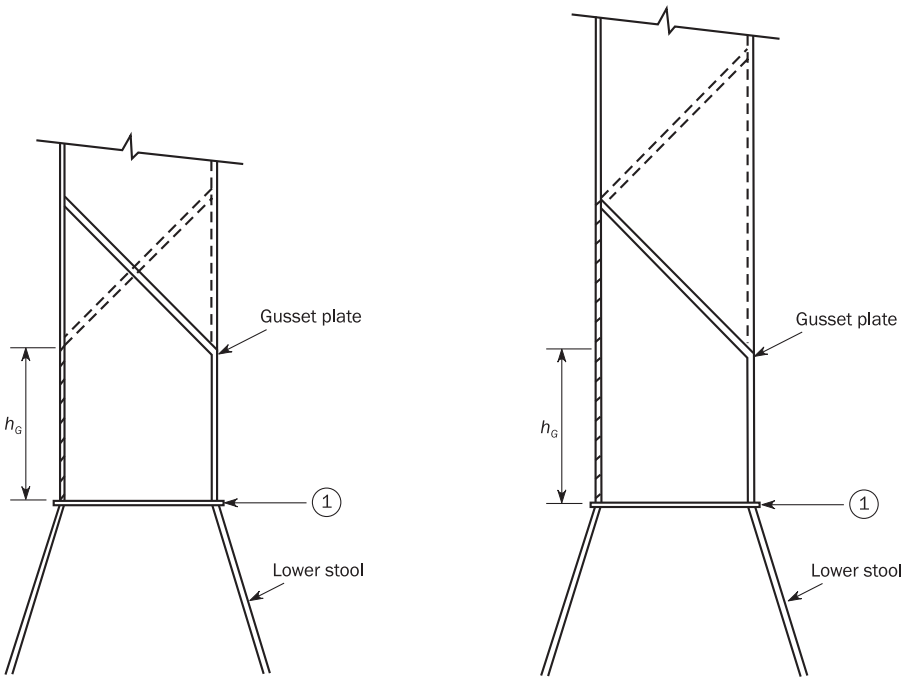

Figure 6 : Asymmetrical gusset / shedder plates

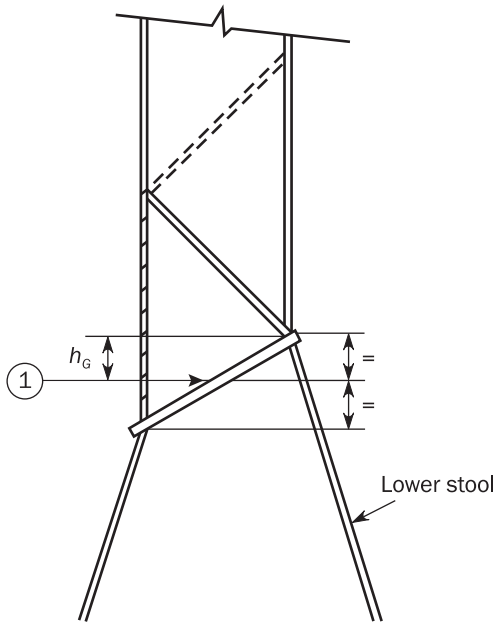

3.3.4 Effective gusset plates

Provided that effective gusset plates are fitted, when calculating the section modulus at the lower end of the corrugations (Sections '1' in Figure 5 and Figure 6), the net area, in cm^2, of flange plates may be increased by l_G to be taken as:

$$l_G = 7\ h_G\ t_f$$

where:

h_G : Height, in m, of gusset plates as shown in Figure 5 and Figure 6 but not to be taken greater than:

$$\frac{10\ S_{GU}}{7}$$

S_{GU} : Width, in m, of gusset plates.

t_f : Net flange thickness, in mm.

Effective gusset plates are those which:

- are in combination with shedder plates having thickness, material properties and welded connections as requested for shedder plates in [3.3.3],
- have a height not less than half of the flange width,
- are fitted in line with the lower stool side plating,
- are welded to the lower stool top plate, corrugations and shedder plates according to Pt 1, Ch 12, Sec 3, [2.4.6],
- have net thickness and material properties not less than those net required for the flanges.

3.3.5 Sloping stool top plate

Where the corrugation webs are welded to a sloping stool top plate which has an angle not less than 45° with the horizontal plane, the section modulus at the lower end of the corrugations may be calculated considering the corrugation webs fully effective. For angles less than 45°, the effectiveness of the web may be obtained by linear interpolation between 30% efficient for 0° and 100% efficient for 45°.

Where effective gusset plates are fitted, when calculating the net section modulus of corrugations, the net area of flange plates may be increased as specified in [3.3.4] above. No credit may be given to shedder plates only.

4 ALLOWABLE HOLD LOADING FOR BC-A & BC-B SHIPS IN FLOODED CONDITIONS

4.1 Evaluation of double bottom capacity and allowable hold loading

4.1.1 Shear capacity of the double bottom

The shear capacity of the double bottom is to be calculated as the sum of the shear strength at each end of:

- Floors connected to hopper tanks, less one half of the shear strength of the two floors adjacent to each stool, or transverse bulkhead if no stool is fitted as shown in Figure 7. The shear strength of floors is to be calculated according to [4.1.2].
- Double bottom girders connected to stools, or transverse bulkheads if no stool is fitted. The shear strength of girders is to be calculated according to [4.1.3].

The floors and girders to be considered when calculating the shear capacity of the double bottom are those inside the hold boundaries formed by the hopper tanks and stools or transverse bulkheads if no stool is fitted. Where both ends of girders or floors are not directly connected to the hold boundaries, their strength is to be evaluated for the connected end only.

The hopper tank side girders and the floors directly below the connection of the stools or transverse bulkheads if no stool is fitted to the inner bottom may not be included.

For special double bottom designs, the shear capacity of the double bottom is to be calculated by means of direct calculations carried out in accordance with requirements specified in Pt 1, Ch 7, as applicable.

4.1.2 Floor shear strength

The floor shear strength, in kN, is to be taken as given in the following formulae:

- In way of the floor panel adjacent to the hopper tank:

$$S_{f1} = A_f \frac{\tau_A}{\eta_1} 10^{-3}$$

- In way of the openings in the outermost bay (i.e., that bay which is closer to the hopper tank):

$$S_{f2} = A_{f,h} \frac{\tau_A}{\eta_2} 10^{-3}$$

where:

A_f : Net sectional area, in mm^2, of the floor panel adjacent to the hopper tank.

$A_{f,h}$: Net sectional area, in mm^2, of the floor panels in way of the openings in the outermost bay (i.e., the bay which is closer to the hopper tank).

τ_A : Allowable shear stress, in N/mm^2, to be taken as the lesser of:

$$\tau_A = 0.645 \frac{R_{eH}^{0.6}}{(s/t)^{0.8}} \quad \text{and} \quad \tau_A = \frac{R_{eH}}{\sqrt{3}}$$

For floors adjacent to the stools or transverse bulkheads, τ_A is taken as:

$$\frac{R_{eH}}{\sqrt{3}}$$

t : Floor web net thickness, in mm.

s : Spacing, in m, of stiffening members of the panel considered.

η_1 : Coefficient to be taken equal to 1.1.

η_2 : Coefficient to be taken equal to 1.2. It may be reduced to 1.1 where appropriate reinforcements are fitted in way of the openings in the outermost bay, to be examined by the Society on a case-by-case basis.

4.1.3 Girder shear strength

The girder shear strength, in kN, is to be taken as given in the following formulae:

- In way of the girder panel adjacent to the stool or transverse bulkhead, if no stool is fitted:

$$S_{g1} = A_g \frac{\tau_A}{\eta_1} 10^{-3}$$

- In way of the largest opening in the outermost bay (i.e., that bay which is closer to the stool) or transverse bulk-head, if no stool is fitted:

$$S_{g2} = A_{g,h} \frac{\tau_A}{\eta_2} 10^{-3}$$

A_g : Net sectional area, in mm^2, of the girder panel adjacent to the stool (or transverse bulkhead, if no stool is fitted).

$A_{g,h}$: Net sectional area, in mm^2, of the girder panel in way of the largest opening in the outermost bay (i.e. that bay which is closer to the stool) or transverse bulkhead, if no stool is fitted.

τ_A : Allowable shear stress, in N/mm^2, as defined in [4.1.2] where t is the girder web net thickness.

η_1 : Coefficient to be taken equal to 1.1.

η_2 : Coefficient to be taken equal to 1.15. It may be reduced to 1.1 where appropriate reinforcements are fitted in way of the largest opening in the outermost bay, to be examined by the Society on a case-by-case basis.

4.1.4 Allowable hold loading

The allowable hold loading, in t, is to be taken as:

$$W = \rho_C V \frac{1}{F}$$

where:

ρ_C : Density of the dry bulk cargo, in t/m^3, as defined Pt 1, Ch 4, Sec 6, [2.3.3].

V : Volume, in m^3, occupied by the cargo up to the level h_B.

F : Coefficient to be taken as:

F = 1.1 in general.

F = 1.05 for steel mill products.

h_B : Level of cargo, in m, to be taken as:

$$h_B = \frac{P}{\rho_C g}$$

P : Pressure, in kN/m^2, to be taken as:

- For dry bulk cargoes, the lesser of:

$$P = \frac{Z + \rho g\,(z_F - 0.1\,D_1 - h_F)}{1 + \frac{\rho}{\rho_C}\,(perm - 1)}$$

$$P = Z + \rho g\,(z_F - 0.1\,D_1 - h_F\,perm)$$

- For steel mill products:

$$P = \frac{Z + \rho g\,(z_F - 0.1\,D_1 - h_F)}{1 - \frac{\rho}{\rho_{ST}}}$$

D_1 : Distance, in m, from the baseline to the freeboard deck at side amidships.

h_F : Inner bottom flooded height, in m, measured vertically with the ship in the upright position, from the inner bottom to the flooded level z_F.

z_F : Flooded level, in m, as defined in Pt 1, Ch 4, Sec 6, [3.1.3].

perm : Permeability of cargo, which need not be taken greater than 0.3.

ρ_{ST} : Density of steel, in t/m^3, to be taken as 7.85.

Z : Pressure, in kN/m^2, to be taken as the lesser of:

$$Z = \frac{C_H}{A_{DB,H}}$$

$$Z = \frac{C_E}{A_{DB,E}}$$

C_H : Shear capacity of the double bottom, in kN, to be calculated according to [4.1.1], considering, for each floor, the lesser of the shear strengths S_{f1} and S_{f2} as defined in [4.1.2] and, for each girder, the lesser of the shear strengths S_{g1} and S_{g2} as defined in [4.1.3].

$A_{DB,H}$: Area, in m^2, taken as:

$$A_{DB,H} = \sum_{i=1}^{n} S_i\, B_{DB,i}$$

C_E : Shear capacity of the double bottom, in kN, to be calculated according to [4.1.1], considering, for each floor, the shear strength S_{f1} as defined in [4.1.2] and, for each girder, the lesser of the shear strengths S_{g1} and S_{g2} as defined in [4.1.3].

$A_{DB,E}$: Area, in m^2, taken as:

$$A_{DB,E} = \sum_{i=1}^{n} S_i\,(B_{DB} - s)$$

n : Number of floors between stools or transverse bulkheads, if no stool is fitted.

S_i : Space of *i*-th floor, in m.

$B_{DB,i}$: Length, in m, to be taken equal to:

$B_{DB,i} = B_{DB} - s$ for floors for which $S_{f1} < S_{f2}$.

$B_{DB,i} = B_{DB,h}$ for floors for which $S_{f1} \geq S_{f2}$.

B_{DB} : Breadth, in m, of double bottom between the hopper tanks as shown in Figure 8.

$B_{DB,h}$: Distance, in m, between the two openings considered as shown in Figure 8.

s : Spacing, in m, of inner bottom longitudinal ordinary stiffeners adjacent to the hopper tanks.

Figure 7 : Double bottom structure

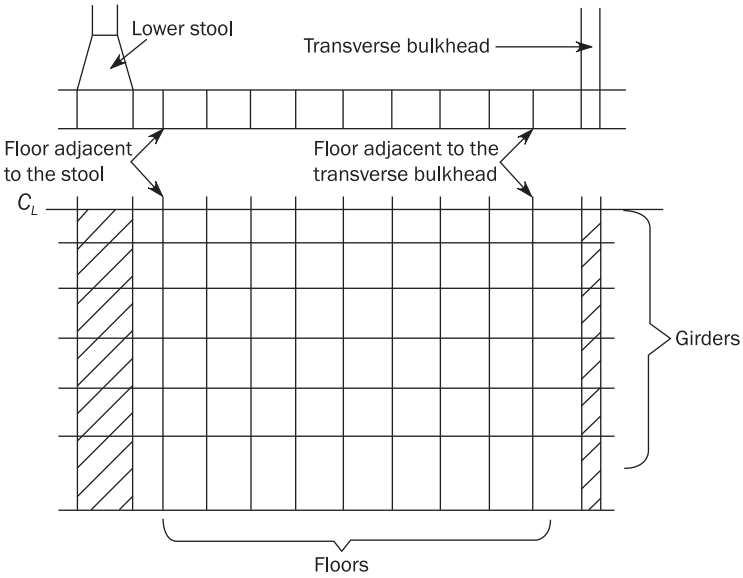

Figure 8 : Dimensions B_{DB} and $B_{DB,h}$

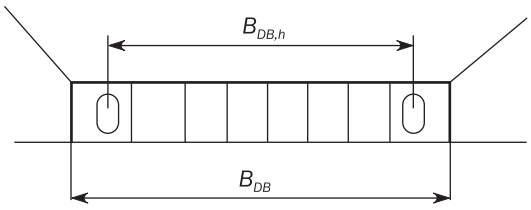

SECTION 4

HULL LOCAL SCANTLINGS FOR BULK CARRIERS L<150M

SYMBOLS

For symbols not defined in this section, refer to Pt 1, Ch 1, Sec 4.

$C_{t\text{-}pr}$: Permissible shear stress coefficient for primary supporting members taken equal to:

$C_{t\text{-}pr}$ = 0.70 for AC-S.

$C_{t\text{-}pr}$ = 0.85 for AC-SD.

ℓ_{DB} : Length of the double bottom within hold under consideration, in m. Where stools are provided at transverse bulkheads, ℓ_{DB} may be taken as the distance between the toes.

B_{DB} : Distance between the toes of hopper tanks at centre of ℓ_{DB} within hold under consideration, in m.

x_c : X coordinate, in m, of the centre of double bottom structure under consideration with respect to the reference coordinate system, as defined in Pt 1, Ch 1, Sec 4, [3.6].

x, y, z : X, Y and Z coordinates, in m, of the evaluation point with respect to the reference coordinate system, as defined in Pt 1, Ch 1, Sec 4, [3.6].

ϕ : Major diameter of the openings, in m.

α : The greater of a or S_1, in m.

1 GENERAL

1.1 Application

1.1.1

Unless otherwise defined, the requirements of this section define the strength criteria applicable to bulk carriers of less than 150 m in length.

2 STRUTS CONNECTING STIFFENERS

2.1 Scantling requirements

2.1.1 Net sectional area and moment of inertia

The net sectional area A_{SR}, in cm^2, and the net moment of inertia I_{SR} about the main axes, in cm^4, of struts connecting stiffeners are not to be less than the values obtained from the following formulae:

$$A_{SR} = \frac{P_{SR}\, s\ell}{20000}$$

$$I_{SR} = \frac{0.75\, s\ell\, (P_{SR1} + P_{SR2})\, A_{ASR}\, \ell^2{}_{SR}}{47200\, A_{ASR} - s\ell\, (P_{SR1} + P_{SR2})}$$

where:

P_{SR} : Pressure to be taken as the greater of the following values, in kN/m^2:

$$P_{SR} = 0.5\ (P_{SR1} + P_{SR2})$$
$$P_{SR} = P_{SR3}$$

P_{SR1} : External pressure in way of the strut, in kN/m^2, acting on one side, outside the compartment in which the strut is located.

P_{SR2} : External pressure in way of the strut, in kN/m^2, acting on the opposite side, outside the compartment in which the strut is located.

P_{SR3} : Internal pressure at mid-span of the strut, in kN/m^2, in the compartment in which the strut is located.

s : Spacing, in mm, of stiffeners, measured at mid-span along the chord.

ℓ : Span, in m, of stiffeners connected by the strut defined in Pt 1, Ch 3, Sec 7, [1.1.5].

ℓ_{SR} : Length of the strut, in m.

A_{ASR} : Actual net sectional area of the strut, in cm^2.

3 TRANSVERSE CORRUGATED BULKHEADS OF BALLAST HOLDS

3.1 Plate thickness

3.1.1

The net thickness of web and flange plating is not to be less than the values obtained in Pt 1, Ch 6, Sec 3, [1.1.1] and Pt 1, Ch 6, Sec 4, [1.2].

3.2 Net section modulus

3.2.1

The net section modulus Z, in cm^3, of corrugated bulkhead of ballast holds, subjected to lateral pressure are not to be less than the values obtained from the following formula:

$$Z = K \frac{P s_C \ell^2}{f_{bdg} C_s R_Y}$$

where:

K : Coefficient given in Table 1 and Table 2, according to the type of end connection. When $d_H < 2.5\ d_0$, both section modulus per half pitch of corrugated bulkhead and section modulus of lower stool at inner bottom are to be calculated.

P : Design pressure for the design load set as defined in Pt 1, Ch 6, Sec 2, Table 1 and calculated at the load calculation point defined in Pt 1, Ch 3, Sec 7, [3.2], in kN/m^2.

s_C : Half pitch length, in mm, of the corrugation, as defined in Pt 1, Ch 3, Sec 6, Figure 21.

ℓ : Length, in m, between the supports, as indicated in Figure 1.

C_s : Coefficient defined in Pt 1, Ch 6, Sec 5, [1.1.2].

f_{bdg} : Coefficient defined in Pt 1, Ch 6, Sec 5, [1.1.2].

The effective width of the corrugation flange in compression is to be considered according to Ch 1, Sec 3, [3.3.1] when the net section modulus of corrugated bulkhead is calculated.

Table 1 : Values of K, in case $d_H \geq 2.5d_0$

Upper end support	
Welded directly to deck	Welded to stool efficiently supported by ship structure
1.00	0.83

Table 2 : Values of K, in case $d_H < 2.5d_0$

Section modulus of	Upper end support	
	Connected to deck	Connected to stool
Corrugated bulkhead	0.71	0.65
Stool at bottom	1.25	1.13

Figure 1 : Measurement of ℓ

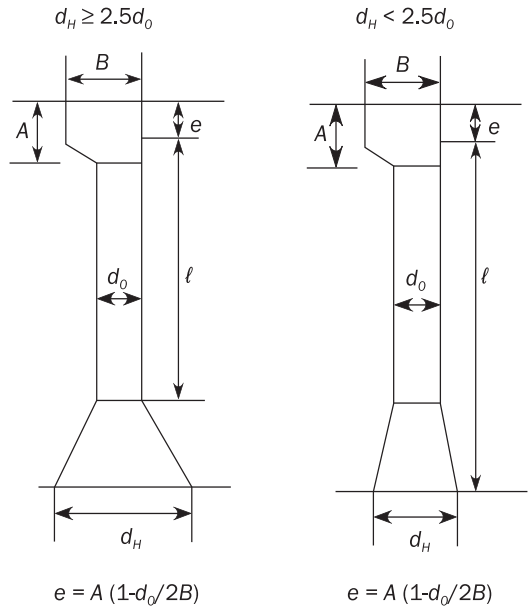

4 PRIMARY SUPPORTING MEMBERS

4.1 Application

4.1.1

The requirements of this section apply to the strength check of primary supporting members in cargo hold structures, subjected to lateral pressure for ships having a length L less than 150 m.

4.1.2

As an alternative to [4.1.1], the strength check may be verified by direct strength assessment deemed as appropriate by the Society.

4.2 Design load sets

4.2.1 Application

Design load sets as given in Table 3 are to be considered for primary supporting members on cargo hold boundaries of bulk carriers less than 150 m in length.

4.2.2 Loading conditions

The severest loading conditions from the loading manual or otherwise specified by the designer are to be considered for the calculation of P_{in} in design load sets BC-11 to BC-12.

If primary supporting members support deck structure or tank/watertight boundaries, applicable design load sets in Pt 1, Ch 6, Sec 2, Table 1 are also to be considered.

Table 3 : Design load sets for primary supporting members in cargo hold region

Item	Design load set	Load component	Draught	Design load	Loading condition
Bulk cargo hold assigned as ballast hold	WB-4	$P_{in} - P_{ex}$ (1)	T_{BAL-H} (3)	S+D	Heavy ballast condition
	WB-6	P_{in}	-	S	Harbour/test condition
Bulk cargo hold	BC-11	$P_{in} - P_{ex}$ (1)	T_{SC}	S+D	Cargo loading condition
	BC-12	$P_{in} - P_{ex}$ (1)	-	S	Harbour condition
Compartments not carrying liquids	FD-1 (2)	P_{in}	T_{SC}	S+D	Flooded condition
	FD-2 (2)	P_{in}		S	Flooded condition

(1) P_{ex} is to be considered for external shell only.
(2) FD-1 and FD-2 are not applicable to external shell.
(3) Minimum draught among heavy ballast conditions is to be used.

4.3 Centre girders and side girders

4.3.1 Net web thickness

The net thickness of girders in double bottom structure, in mm, is not to be less than the greater of the value t_1 and t_2 specified in the followings according to each location:

$$t_1 = C_1 \frac{|P|\ S\ |x - x_c|}{(d_0 - d_1)\ C_{t-pr}\ \tau_{eH}} \left\{ 1 - 4 \left(\frac{y}{B_{DB}} \right)^2 \right\}$$

where $|x - x_c|$ is less than 0.25 ℓ_{DB}, $|x - x_c|$ is to be taken as 0.25 ℓ_{DB}.

$$t_2 = 1.75 \sqrt[3]{\frac{H^2\ a^2\ C_{t-pr}\ \tau_{eH}}{C'_1}}\ t_1$$

where:

P : Design pressure in kN/m^2, for the design load set being considered according to Pt 1, Ch 6, Sec 2, [2.1.3], calculated at mid-point of a floor located midway between transverse bulkheads or transverse bulkhead and toe of stool, where fitted.

S : Distance between the centres of the two spaces adjacent to the centre or side girder under consideration, in m.

d_0 : Depth of the centre or side girder under consideration, in m.

d_1 : Depth of the opening, if any, at the point under consideration, in m.

C_1 : Coefficient given in Table 4 depending on B_{DB}/ℓ_{DB}. For intermediate values of B_{DB}/ℓ_{DB}, C_1 is to be obtained by linear interpolation.

a : Depth of girders at the point under consideration, in m. However, where horizontal stiffeners are fitted on the girder, a is the distance from the horizontal stiffener under consideration to the bottom shell plating or inner bottom plating, or the distance between the horizontal stiffeners under consideration.

S_1 : Spacing, in m, of vertical stiffeners or floors.

C'_1 : Coefficient given in Table 5 depending on S_1/a. For intermediate values of S_1/a, C'_1 is to be determined by linear interpolation.

H : Value obtained from the following formulae:

- Where the girder is provided with an unreinforced opening:

$$H = 1 + 0.5\,\frac{\phi}{\alpha}$$

- In other cases:

$H = 1.0$.

Table 4 : Coefficient C_1

B_{DB}/ℓ_{DB}	0.4 and under	0.6	0.8	1.0	1.2	1.4	1.6 and over
C_1	0.5	0.71	0.83	0.88	0.95	0.98	1.00

Table 5 : Coefficient C'_1

S_1/a	0.3 and under	0.4	0.5	0.6	0.7	0.8	0.9	1.0	1.2	1.4 and over
C'_1	64	38	25	19	15	12	10	9	8	7

4.4 Floors

4.4.1 Net web thickness

The net thickness of floors in the double bottom structure, in mm, is not to be less than the greatest of values t_1 and t_2 specified in the following according to each location:

$$t_1 = C_2\,\frac{|P|\;S\;B_{DB}}{(d_0 - d_1)\;C_{t-pr}\;\tau_{eH}}\left(\frac{2\;|y|}{B'_{DB}}\right)\left\{1 - 2\left(\frac{x - x_c}{\ell_{DB}}\right)^2\right\}$$

where $|x - x_c|$ is less than $0.25\,\ell_{DB}$, $|x - x_c|$ is to be taken as $0.25\,\ell_{DB}$ and where $|y|$ is less than $B'_{DB}/4$, $|y|$ is to be taken as $B'_{DB}/4$.

$$t_2 = 1.75\,\sqrt[3]{\frac{H^2\;a^2\;C_{t-pr}\;\tau_{eH}}{C'_2}}\,t_1$$

where:

P : Design pressure in kN/m^2, for the design load set being considered according to Pt 1, Ch 6, Sec 2, [2.1.3], calculated at mid-point of a floor located midway between transverse bulkheads or transverse bulkhead and toe of stool, where fitted.

S : Spacing of solid floors, in m.

d_0 : Depth of the solid floor at the point under consideration in m.

d_1 : Depth of the opening, if any, at the point under consideration in m.

B'_{DB} : Distance between toes of hopper tanks at the position of the solid floor under consideration, in m.

C_2 : Coefficient given in Table 6 depending on B_{DB}/ℓ_{DB}. For intermediate values of B_{DB}/ℓ_{DB}, C_2 is to be obtained by linear interpolation.

a : Depth of the solid floor at the point under consideration, in m. However, where horizontal stiffeners are fitted on the floor, a is the distance from the horizontal stiffener under consideration to the bottom shell plating or the inner bottom plating or the distance between the horizontal stiffeners under consideration.

S_1 : Spacing, in m, of vertical stiffeners or girders.

C'_2 : Coefficient given in Table 7 depending on S_1 / d_0. For intermediate values of S_1 / d_0, C'_2 is to be determined by linear interpolation.

H : Value obtained from the following formulae:

Where openings with reinforcement or no opening are provided on solid floors:

- Where slots without reinforcement are provided:

$$H = \sqrt{4.0 \frac{d_2}{S_1} - 1.0} \text{ without being taken less than 1.0.}$$

- Where slots with reinforcement are provided:

$H = 1.0$.

Where openings without reinforcement are provided on solid floors:

- Where slots without reinforcement are provided:

$$H = \left(1 + 0.5 \frac{\phi}{d_0}\right) \sqrt{4.0 \frac{d_2}{S_1} - 1.0} \text{ without being taken less than } 1 + 0.5 \frac{\phi}{d_0}$$

- where slots with reinforcement are provided:

$$H = 1 + 0.5 \frac{\phi}{d_0}$$

d_2 : Depth of slots without reinforcement provided at the upper and lower parts of solid floors, in m, whichever is greater.

Table 6 : Coefficient C_2

B_{DB} / ℓ_{DB}	0.4 and under	0.6	0.8	1.0	1.2	1.4	1.6 and over
C_2	0.48	0.47	0.45	0.43	0.40	0.37	0.34

Table 7 : Coefficient C'_2

S_1/d_0	0.3 and under	0.4	0.5	0.6	0.7	0.8	0.9	1.0	1.2	1.4 and over
C'_2	64	38	25	19	15	12	10	9	8	7

4.5 Stringer of double side structure

4.5.1 Net web thickness

The net thickness of stringers in double side structure, in mm, is not to be less than the greater of the value t_1 and t_2 specified in the followings according to each location:

$$t_1 = C_3 \frac{|P\,|S\,|x - x_c|}{(d_0 - d_1)\; C_{t-pr}\; \tau_{eH}}$$

where $|x - x_c|$ is under 0.25 ℓ_{DS}, $|x - x_c|$ is to be taken as 0.25 ℓ_{DS}.

$$t_2 = 1.75 \sqrt[3]{\frac{H^2\, a^2\, C_{t-pr}\, \tau_{eH}}{C'_3}}\, t_1$$

where:

P : Design pressure in kN/m^2, for the design load set being considered according to Pt 1, Ch 6, Sec 2, [2.1.3], as measured vertically at the upper end of hopper tank, longitudinally at the centre of ℓ_{DS}.

S : Breadth of part supported by stringer, in m.

d_0 : Depth of stringers, in m.

d_1 : Depth of opening, if any, at the point under consideration, in m.

ℓ_{DS} : Length of the double side structure between the transverse bulkheads under consideration, in m.

h_{DS} : Height of the double side structure between the upper end of hopper tank and the lower end of topside tank located midway between transverse bulkheads of hold under consideration, in m.

C_3 : Coefficient given in Table 8 depending on h_{DS}/ℓ_{DS}. For intermediate values of h_{DS}/ℓ_{DS}, C_3 is to be obtained by linear interpolation.

a : Depth of stringers at the point under consideration, in m. However, where horizontal stiffeners are fitted on the stringer, a is the distance from the horizontal stiffener under consideration to the side shell plating or the longitudinal bulkhead of double side structure or the distance between the horizontal stiffeners under consideration.

S_1 : Spacing, in m, of transverse stiffeners or web frames.

C'_3 : Coefficient given in Table 9 depending on S_1/a. For intermediate values of S_1/a, C'_3 is to be obtained by linear interpolation.

H : Value obtained from the following formulae:

- Where the stringer is provided with an unreinforced opening:

$$H = 1 + 0.5\,\frac{\phi}{\alpha}$$

- In other cases:

$H = 1.0$.

Table 8 : Coefficient C_3

h_{DS}/ℓ_{DS}	0.5 and under	0.6	0.7	0.8	0.9	1.0	1.1	1.2	1.3 and over
C_3	0.16	0.23	0.30	0.36	0.41	0.44	0.47	0.50	0.54

Table 9 : Coefficient C'_3

S_1/a	0.3 and under	0.4	0.5	0.6	0.7	0.8	0.9	1.0	1.2	1.4 and over
C'_3	64	38	25	19	15	12	10	9	8	7

4.6 Transverse web in double side structure

4.6.1 Net web thickness

The net thickness of transverse webs in double side structure, in mm, is not to be less than the greater of the value t_1 and t_2 specified in the followings according to each location:

$$t_1 = C_4\,\frac{|P|\,S h_{DS}}{(d_0 - d_1)\,C_{t-pr}\,\tau_{eH}}\left(1 - 1.75\,\frac{z - z_{BH}}{h'_{DS}}\right)$$

where $z - z_{BH}$ is greater than $0.4\,h'_{DS}$, $z - z_{BH}$ is to be taken as $0.4\,h'_{DS}$.

$$t_2 = 1.75\,\sqrt[3]{\frac{H^2\,a^2\,C_{t-pr}\,\tau_{eH}}{C'_4}}\,t_1$$

where:

P : Design pressure in kN/m^2, for the design load set being considered according to Pt 1, Ch 6, Sec 2, [2.1.3], as measured vertically at the upper end of hopper tank, longitudinally at the centre of ℓ_{DS}.

S : Breadth of part supported by transverses, in m.

d_0 : Depth of transverses, in m.

d_1 : Depth of opening at the point under consideration, in m.

C_4 : Coefficient given in Table 10 depending on h_{DS}/ℓ_{DS}. For intermediate values of h_{DS}/ℓ_{DS}, C_4 is to be obtained by linear interpolation.

z_{BH} : Z coordinate, in m, of the upper end of hopper tank with respect to the reference coordinate system defined in Pt 1, Ch 1, Sec 4, [3.6].

h_{DS} : As defined in the requirements of [4.5.1].

h'_{DS} : Height of the double side structure between the upper end of hopper tank and the lower end of topside tank at the position under consideration, in m.

ℓ_{DS} : As defined in the requirements of [4.5.1].

a : Depth of transverses at the point under consideration, in m. However, where vertical stiffeners are fitted on the transverse, a is the distance from the vertical stiffener under consideration to the side shell or the longitudinal bulkhead of double side hull or the distance between the vertical stiffeners under consideration.

S_1 : Spacing, in m, of horizontal stiffeners or stringers.

C'_4 : Coefficient given in Table 11 depending on S_1/a. For intermediate values of S_1/a, C'_4 is to be obtained by linear interpolation.

H : Value obtained from the following formulae:

- Where the transverse is provided with an unreinforced opening:

$$H = 1 + 0.5\,\frac{\phi}{\alpha}$$

- In other cases:

$H = 1.0$.

α : The greater of a or S_1, in m.

Table 10 : Coefficient C_4

h_{DS}/ℓ_{DS}	0.5 and under	0.6	0.7	0.8	0.9	1.0	1.1	1.2	1.3 and over
C_4	0.62	0.61	0.59	0.55	0.52	0.49	0.46	0.43	0.41

Table 11 : Coefficient C'_4

S_1/a	0.3 and under	0.4	0.5	0.6	0.7	0.8	0.9	1.0	1.2	1.4 and over
C'_4	64	38	25	19	15	12	10	9	8	7

4.7 Primary supporting member in bilge hopper tanks and topside tanks

4.7.1 Boundary conditions

The requirements of this sub-article apply to primary supporting members considered as clamped at both ends. For boundary conditions deviated from the above, the yielding check is to be considered on a case-by-case basis.

4.7.2 Net section modulus, net shear sectional area and web thickness

The net section modulus Z, in cm^3, the net shear sectional area A_{shr}, in cm^2, and the net web thickness t_w, in mm, subjected to lateral pressure are not to be less than the values obtained from the following formulae:

$$Z = \frac{|P|\, S\ell_{bdg}^{\,2}}{f_{bdg}\, C_{s-pr}\, R_{eH}}\, 10^3$$

$$A_{shr} = \frac{5\ |P|\ S\ell_{shr}}{C_{t-pr}\ \tau_{eH}}$$

$$t_w = 1.75\ \sqrt[3]{\frac{h_w\ C_{t-pr}\ \tau_{eH}}{10^4\ C_5}\ A_{shr}}$$

where:

P : Design pressure in kN/m^2, for the design load set being considered according to Pt 1, Ch 6, Sec 2, [2.1.3], calculated at the mid-point of span ℓ of a web frame located midway between transverse bulkheads of holds.

S : Spacing of primary supporting members, in m.

ℓ_{bdg} : Effective bending span, in m, of primary supporting members, measured between the supporting members as defined in Pt 1, Ch 3, Sec 7, [1.1.6].

ℓ_{shr} : Effective shear span, in m, of primary supporting members, measured between the supporting members as defined in Pt 1, Ch 3, Sec 7, [1.1.7].

f_{bdg} : Bending moment factor:

- For continuous primary supporting members and where end connections are fitted consistent with idealisation of the primary supporting members as having fixed ends and is not to be taken higher than:

  f_{bdg} = 10.

- For primary supporting members with reduced end fixity, the yield check is to be considered on a case-by-case basis.

$C_{s\text{-}pr}$: Permissible bending stress coefficient for primary supporting members taken equal to:

$C_{s\text{-}pr}$ = 0.70 for AC-S.

$C_{s\text{-}pr}$ = 0.85 for AC-SD.

h_w : Web height, in mm.

C_5 : Coefficient defined in Table 12 according to s_1 and d_0. For intermediate values of s_1/d_0, coefficient C_5 is to be obtained by linear interpolation.

s_1 : Spacing of stiffeners or tripping brackets on web plate, in m.

d_0 : Spacing of stiffeners parallel to shell plate on web plate, in m.

Table 12 : Coefficient C_5

s_1/d_0	0.3 and less	0.4	0.5	0.6	0.7	0.8	0.9	1.0	1.5	2.0 and over
C_5	60.0	40.0	26.8	20.0	16.4	14.4	13.0	12.3	11.1	10.2

SECTION 5
CARGO HATCH COVERS

SYMBOLS

For symbols not defined in this section, refer to Pt 1, Ch 1, Sec 4.

P_S : Still water pressure, in kN/m^2, as defined in [4.1].

P_W : Wave pressure, in kN/m^2, as defined in [4.1].

P_C : Pressure acting on the hatch coaming, in kN/m^2, as defined in [6.2].

F_S, F_W : Coefficients taken equal to:
F_S = 0 and F_W = 0.9 for ballast water loads on hatch covers of the ballast hold.

F_S = 1.0 and F_W = 1.0 in other cases.

b_p : Effective breadth, in mm, of the plating attached to the stiffener or primary supporting member, as defined in [3].

A_{shr} : Net shear sectional area, in cm^2, of the stiffener or primary supporting member.

f_{bc} : Boundary coefficient for stiffeners and primary supporting members, taken equal to:

f_{bc} = 8, in the case of stiffeners and primary supporting members simply supported at both ends or supported at one end and clamped at the other end.

f_{bc} = 12, in the case of stiffeners and primary supporting members clamped at both ends.

t_c : Total corrosion addition, in mm, as defined in [1.4].

σ_a, τ_a : Allowable stresses, in N/mm^2, as defined in [1.5].

1 GENERAL

1.1 Application

1.1.1

The requirements in [1] to [8] apply to steel hatch covers in positions 1 and 2 on weather decks, as defined in Pt 1, Ch 1, Sec 4, [3.2].

1.2 Materials

1.2.1 Steel

The formulae for scantlings given in [5] are applicable to steel hatch covers.

Materials used for the construction of steel hatch covers are to comply with the applicable requirements of the Society.

1.2.2 Other materials

The use of materials other than steel is to be considered by the Society on a case-by-case basis, by checking that criteria adopted for scantlings are such as to ensure strength and stiffness equivalent to those of steel hatch covers.

1.3 Net scantlings

1.3.1

All scantlings referred to in this section are net, i.e. they do not include any margin for corrosion.

When calculating the stresses σ and τ in [5.3] and [5.4], the net scantlings are to be used.

The gross scantlings are obtained as specified in Pt 1, Ch 3, Sec 2.

The corrosion additions are given in [1.4].

1.4 Corrosion additions

1.4.1

The total corrosion addition for both sides to be considered for the plating and internal members of hatch covers is equal to the value specified in Table 1.

The corrosion addition for hatch coamings and coaming stays is defined according to Pt 1, Ch 3, Sec 3.

Table 1 : Corrosion addition t_c for hatch covers

Corrosion addition t_c, in mm, for both sides	
Plating and stiffeners of single skin hatch cover	2.0
Top and bottom plating of double skin hatch cover	2.0
Internal structures of double skin hatch cover	1.5

1.5 Allowable stresses

1.5.1

The allowable stresses σ_a and τ_a, in N/mm^2, are to be obtained from Table 2.

Table 2 : Allowable stresses, in N/mm^2

Members of	Subjected to	σ_a, in N/mm^2	τ_a, in N/mm^2
Weathertight hatch cover	External pressure, as defined in [4.1.2]	0.80 R_{eH}	0.46 R_{eH}
Weathertight hatch cover	Other loads, as defined in [4.1.3] to [4.1.6]	0.90 R_{eH}	0.51 R_{eH}

The allowable buckling utilisation factors are given in Table 3:

Table 3 : Allowable buckling utilisation factors

Structural component	Subject to	η_{all}, Allowable buckling utilisation factor
Plates and stiffeners Web of PSM	External pressure, as defined in [4.1.2]	0.80 for load combination: S+D
	Other loads, as defined in [4.1.3] to [4.1.6]	0.80 for load combination: S+D 0.64 for load combination: S

2 ARRANGEMENTS

2.1 DELETED [RCN1 to 01 JAN 2020]

2.1.1 DELETED

[RCN1 to 01 JAN 2020]

2.1.2 DELETED

[RCN1 to 01 JAN 2020]

2.2 Hatch covers

2.2.1

The stiffeners and primary supporting members of the hatch covers are to be continuous over the breadth and length of the hatch covers, as far as practical. When this is impractical, sniped end connections are not to be used and appropriate arrangements are to be adopted to ensure sufficient load carrying capacity.

2.2.2

The spacing of primary supporting members parallel to the direction of stiffeners is not to be greater than 1/3 of the span of primary supporting members.

2.2.3

The breadth of the primary supporting member face plate is not to be less than 40% of their depth for laterally unsupported spans greater than 3 m. Tripping brackets attached to the face plate may be considered as a lateral support for primary supporting members.

The face plate outstand is not to exceed 15 times the gross face plate thickness.

2.2.4

Efficient retaining arrangements are to be provided to prevent translation of the hatch cover under the action of the longitudinal and transverse forces exerted by cargoes on the cover, if any. These retaining arrangements are to be located in way of the hatch coaming side brackets.

2.2.5

The width of each bearing surface for hatch covers is to be at least 65 mm.

2.3 Hatch coamings

2.3.1

Coamings, stiffeners and brackets are to be capable of withstanding the local forces in way of the clamping devices and handling facilities necessary for securing and moving the hatch covers as well as those due to cargo stowed on the latter.

2.3.2

Special attention is to be paid to the strength of the fore transverse coaming of the forward hatch and to the scantlings of the closing devices of the hatch cover on this coaming.

2.3.3

Longitudinal coamings are to be extended at least to the lower edge of deck beams.

- Where they are not part of continuous deck girders, the lower edge of longitudinal coamings are to extend for at least two frame spaces beyond the end of the openings.
- Where longitudinal coamings are part of deck girders, their scantlings are to be as required in Pt 1, Ch 6, Sec 6 and Pt 1, Ch 8, Sec 3.

2.3.4

A web frame or a similar structure is to be provided below the deck in line with the transverse coaming. Transverse coamings are to extend below the deck and to be connected with the web frames.

3 WIDTH OF ATTACHED PLATING

3.1 Stiffeners

3.1.1

The width of the attached plating b_p, in mm, to be considered for the check of stiffeners is to be taken as:

- Where the attached plating extends on both sides of the stiffener:

  $b_p = s$

- Where the attached plating extends on one side of the stiffener:

  $b_p = 0.5\ s$

3.2 Primary supporting members

3.2.1

The effective breadth, in mm, of the attached plating to be considered for the yielding and buckling checks of primary supporting members analysed through isolated beam or grillage model is to be taken as:

- Where the plating extends on both sides of the primary supporting member:

  $b_p = b_{eff}$

- Where the plating extends on one side of the primary supporting member:

  $b_p = 0.5 b_{eff}$

where:

b_{eff} : Effective breadth of attached plating, in m, as defined in Pt 1, Ch 3, Sec 7, [1.3.2].

For structural evaluations based on isolated beam or grillage models, the areas of stiffeners are not to be included in the idealisation of the attached plating of the primary members.

4 LOAD MODEL

4.1 Lateral pressures and forces

4.1.1 General

The lateral pressures and forces to be considered as acting on hatch covers are given in [4.1.2] to [4.1.6]. When two or more panels are connected by hinges, each individual panel is to be considered separately.

In any case, the sea pressures defined in [4.1.2] are to be considered for hatch covers located on exposed decks.

Additionally, when the hatch cover is intended to carry uniform cargoes, special cargoes or containers, the pressures and forces defined in [4.1.3] to [4.1.6] are to be considered independently from the sea pressures.

4.1.2 Sea pressures

The still water and wave lateral pressures are to be considered and are to be taken equal to:

- Still water pressure: $P_S = 0$.
- Wave pressure $P_W = P_{HC}$, as defined in Pt 1, Ch 4, Sec 5, [5.2].

4.1.3 Internal pressures due to ballast water

If applicable, the internal static and dynamic lateral pressures due to ballast water are to be considered and are defined in Pt 1, Ch 4, Sec 6, [1].

4.1.4 Pressures due to uniform cargoes

If applicable, the static and dynamic pressures due to uniform cargoes are to be considered and are defined in Pt 1, Ch 4, Sec 5, [5.3.1].

4.1.5 Pressures or forces due to special cargoes

In the case of carriage of special cargoes (e.g. pipes, etc) on the hatch covers which may temporarily retain water during navigation, the lateral pressures or forces to be applied are considered by the Society on a case-by-case basis.

4.1.6 Forces due to containers

In the case of carriage of containers on the hatch covers, the concentrated forces under the containers corners are to be determined in accordance with the applicable requirements of the Society.

4.1.7 Self weight

The effect of the hatch cover structure weight is to be included in the static loads but not in the dynamic loads.

4.2 Load point

4.2.1 Wave lateral pressure for hatch covers on exposed decks

The wave lateral pressure to be considered as acting on each hatch cover is to be calculated at a point located:

- Longitudinally, at the hatch cover mid-length.
- Transversely, on the longitudinal plane of symmetry of the ship.
- Vertically, at the top of the hatch cover.

4.2.2 Lateral pressures other than the wave pressure

The lateral pressure is to be calculated at the level of the tight boundary of the cover:

- In way of the geometrical centre of gravity of the plate panel, for plating.
- At mid-span, for stiffeners and primary supporting members.

5 STRENGTH CHECK

5.1 General

5.1.1 Application

The strength check is applicable to rectangular hatch covers subjected to a uniform pressure, designed with primary supporting members arranged in one direction or as a grillage of longitudinal and transverse primary supporting members.

In the latter case, i.e. when the hatch cover is arranged as a grillage of longitudinal and transverse primary supporting members, or when the Society deems it necessary, the stresses in the primary supporting members are to be determined by a grillage or a finite element analysis.

It is to be checked that stresses induced by concentrated loads are in accordance with the criteria in [5.4.4].

When FE analysis is carried out, the buckling assessment as described in [5.2.3], [5.3.4] and [5.4.6] can be made considering only the stresses given by the FE analysis.

The hatch covers fitted with U type stiffeners as shown in Figure 1 are to be checked by means of FE analysis. In transverse section of the stiffener, nodes are to be located at the connection between the web of the U type stiffener and the hatch cover plate as well as at the connection between the web and the flange of the U type stiffener. The buckling assessment as described in [5.2.3], [5.3.4] and [5.4.6] can be made considering only the stresses given by the FE analysis.

Figure 1 : Example of hatch cover fitted with U type stiffener

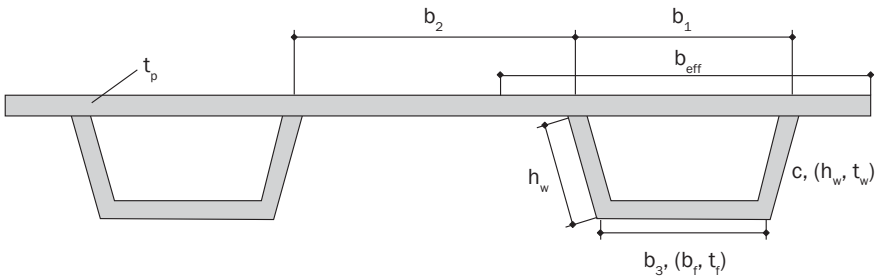

5.1.2 Hatch covers supporting containers

The scantlings of hatch covers supporting containers are to comply with the applicable requirements of the Society.

5.1.3 Hatch covers subjected to special cargoes

For hatch covers supporting special cargoes, stiffeners and primary supporting members are generally to be checked by direct calculations, taking into account the stiffener arrangements and their relative inertia. It is to be checked that stresses induced by special cargoes are in accordance with the criteria in [5.4.4].

5.2 Plating

5.2.1 Net thickness

The net thickness, in mm, of steel hatch cover top plating is not to be taken less than:

$$t = 0.0158\, F_p b \sqrt{\frac{F_s\, P_s + F_W\, P_W}{0.95\, R_{eH}}}$$

where:

F_p : Factor for combined membrane and bending response, equal to:

$F_p = 1.5$ in general.

$F_p = 1.9\,\dfrac{\sigma}{\sigma_a}$ for $\sigma \geq 0.8\sigma_a$ for the attached plating of primary supporting members.

σ : Normal stress, in N/mm^2, in the attached plating of primary supporting members, calculated according to [5.4.3] or determined through a grillage analysis or a finite element analysis.

5.2.2 Minimum net thickness

In addition to [5.2.1], the net thickness, in mm, of the plating forming the top of the hatch cover is not to be taken less than the greater of the following values:

$$t = \frac{b}{100}$$

$t = 6$

5.2.3 Buckling strength

The buckling strength of the hatch cover plating subjected to loading conditions as defined in [4.1] is to comply with the following formula:

$$\eta_{Plate} \leq \eta_{all}$$

where:

η_{Plate} : Maximum plate utilisation factor calculated according to Method A, as defined in Pt 1, Ch 8, Sec 5, [2.2].

- For stresses obtained from beam theory, i.e. not calculated by means of finite element analysis:
  - σ_x or σ_y is selected for the uniaxial check of the plate in the direction parallel to the primary supporting member,
  - $\tau = 0$.
- For stresses calculated by means of finite element analysis: σ_x, σ_y, τ obtained from FE analysis.

η_{all} : Allowable utilisation factor, as given in Table 3.

For hatch covers fitted with U type stiffeners, the buckling panels b_1, b_2 and c (see Figure 1) are to be assessed separately.

5.3 Stiffeners

5.3.1

For flat bar stiffeners, the ratio h_w / t_w is to comply with the following formula:

$$\frac{h_w}{t_w} \leq 15 \sqrt{\frac{235}{R_{eH}}}$$

5.3.2 Minimum net thickness of web

The net thickness, in mm, of the stiffener web is to be taken not less than 4 mm.

5.3.3 Net section modulus and net shear sectional area

The net section modulus Z, in cm^3, and the net shear sectional area A_{shr}, in cm^2, of a stiffener subject to lateral pressure are to be taken not less than given by the following formulae:

$$Z = \frac{(F_S\, P_S + F_W\, P_W)\; s \cdot \ell_s^2}{f_{bc}\; \sigma_a}\; 10^{-3}$$

$$A_{shr} = \frac{5(F_S\, P_S + F_W\, P_W)\; s\; \ell_s}{\tau_a}$$

where:

ℓ_s : Stiffener span, in m, to be taken as the spacing, in m, of primary supporting members or the distance between a primary supporting member and the edge support, as applicable. When brackets are fitted at both ends of all stiffener spans, the stiffener span may be reduced by an amount equal to 2/3 of the minimum brackets arm length, but not greater than 10% of the gross span, for each bracket.

5.3.4 Buckling strength

The buckling strength of the hatch cover stiffeners subjected to loading conditions as defined in [4.1] is to comply with the following formula:

$\eta_{Stiffener} \leq \eta_{all}$

where:

$\eta_{Stiffener}$: Maximum stiffener utilisation factor calculated according to Pt 1, Ch 8, Sec 5, [2.3].

- For uniaxial stresses obtained by beam theory, i.e. not calculated by means of finite element analysis:
  - σ_x : stiffener axial stress,
  - $\sigma_y = 0$,
  - $\tau = 0$.
- For stresses calculated by means of finite element analysis:
  - σ_x : stiffener axial stress from FE analysis,
  - σ_y : stress perpendicular to the stiffener,
  - τ : shear stress in the attached plate.

η_{all} : Allowable utilisation factor, as given in Table 3.

The buckling strength of the hatch cover fitted with U type stiffeners subjected to loading conditions as defined in [4.1] is to be checked as detailed above, considering the U type as an equivalent T-bar profile as follows:

- Web height taken equal to *d* as defined in Pt 1, Ch 3, Sec 6, Figure 21.
- Web thickness equal to 2 t_w.
- Flange breadth taken as b_3, as shown on Figure 1.
- Flange thickness taken as t_f, as shown on Figure 1.
- Effective width of the attached plating, b_{eff}, taken as:

  $$b_{eff} = C_{x1} b_1 + C_{x2} b_2$$

  where:

  C_{x1}, C_{x2} : Reduction factor defined in Pt 1, Ch 8, Sec 5, Table 3 calculated for the EPP *b1* and *b2* according to case 1.

5.4 Primary supporting members

5.4.1 Application

The requirements in [5.4.3] to [5.4.5] apply to primary supporting members which may be analysed through isolated beam models.

Primary supporting members whose arrangement is of a grillage type and which cannot be analysed through isolated beam models are to be checked by direct calculations, using the checking criteria in [5.4.4].

5.4.2 Minimum net thickness of web

The web net thickness of primary supporting members, in mm, is not to be less than 6 mm.

5.4.3 Normal and shear stress for isolated beam

In case that grillage analysis or finite element analysis are not carried out, according to the requirements in [5.1.1], the maximum normal stress σ and shear stress τ, in N/mm^2, in the primary supporting members are to be taken as given by the following formulae:

$$\sigma = \frac{S(F_S\ P_S + F_W\ P_W)\ \ell_m^2}{f_{bc}\ Z}$$

$$\tau = \frac{5\ S(F_S\ P_S + F_W\ P_W)\ \ell_m}{A_{shr}}$$

where:

ℓ_m : Bending span, in m, of the primary supporting member.

5.4.4 Checking criteria

The normal stress σ and the shear stress τ, calculated according to [5.4.3] or determined through a grillage analysis or finite element analysis, as the case may be, are to comply with the following formulae:

$$\sigma \le \sigma_a$$

$$\tau \le \tau_a$$

5.4.5 Deflection limit

The net moment of inertia of a primary supporting member, when loaded by sea pressure, excluding the self-weight of the structure, is to be such that the deflection does not exceed $\mu\ \ell_{max}$.

where:

μ : Coefficient taken equal to:

μ = 0.0056 for weathertight hatch covers.

ℓ_{max} : Greatest span, in m, of primary supporting members.

5.4.6 Buckling strength of the web panels of the primary supporting members

The web of primary supporting members subject to loading conditions as defined in [4.1] is to be taken as:

$$\eta_{Plate} \le \eta_{all}$$

where:

η_{Plate} : Maximum plate utilisation factor calculated according to Method A, as defined in Pt 1, Ch 8, Sec 5, [2.2]. For web plate in way of opening, it is to be calculated according to Method A, as defined in Pt 1, Ch 8, Sec 5, [2.4].

- Shear stress obtained by beam theory (i.e. calculated according to [5.4.3] or determined through a grillage analysis), or
- σ_x, σ_y, τ obtained by FE analysis.

η_{all} : Allowable utilisation factor, as given in Table 3.

5.4.7 Slenderness criteria

For buckling stiffeners on webs of primary supporting members, the ratio h_w/t_w is to comply with the following formula:

$$\frac{h_w}{t_w} \le 15\ \sqrt{\frac{235}{R_{eH}}}$$

5.5 Stiffeners and primary supporting members of variable cross section

5.5.1

The net section modulus Z, in cm^3, of stiffeners and primary supporting members with a variable cross section is to be taken not less than the greater of the values given by the following formulae:

$$Z = Z_{CS}$$

$$Z = \left(1 + \frac{3.2\alpha - \psi - 0.8}{7\psi + 0.4}\right) Z_{CS}$$

where:

Z_{CS} : Net section modulus, in cm^3, for a constant cross section, complying with the checking criteria in [5.4.4].

a : Coefficient taken equal to:

$$\alpha = \frac{\ell_1}{\ell_0}$$

ψ : Coefficient taken equal to:

$$\psi = \frac{Z_1}{Z_0}$$

ℓ_1 : Length of the variable section part, in m, as shown in Figure 2.

ℓ_0 : Span measured, in m, between end supports, as shown in Figure 2.

Z_1 : Net section modulus at end, in cm^3, as shown in Figure 2.

Z_0 : Net section modulus at mid-span, in cm^3, as shown in Figure 2.

Moreover, the net moment of inertia, in cm^4, of stiffeners and primary supporting members with a variable cross section is to be taken not less than the greater of the values given by the following formulae:

$$I = I_{CS}$$

$$I = \left[1 + 8\alpha^3 \left(\frac{1 - \varphi}{0.2 + 3\sqrt{\varphi}}\right)\right] I_{CS}$$

where:

I_{CS} : Net moment of inertia, in cm^4, with a constant cross section complying with [5.4.5].

φ : Coefficient taken equal to:

$$\varphi = \frac{I_1}{I_0}$$

I_1 : Net moment of inertia at end, in cm^4, as shown in Figure 2.

I_0 : Net moment of inertia at mid-span, in cm^4, as shown in Figure 2.

The use of these formulae is limited to the determination of the strength of stiffeners and primary supporting members in which abrupt changes in the cross section do not occur along their length.

Figure 2 : Variable cross section stiffener

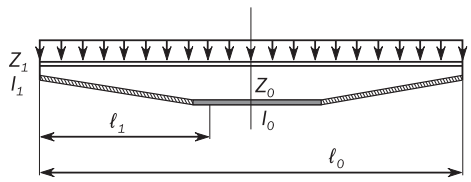

6 HATCH COAMINGS

6.1 Stiffening

6.1.1

The stiffeners of the hatch coamings are to be continuous over the breadth and length of the hatch coamings.

6.1.2

Coamings are to be stiffened on their upper edges with a stiffener suitably shaped to fit the hatch cover closing appliances.

6.1.3

Where the height of the coaming exceeds 900 mm, additional strengthening may be required.

However, reductions may be granted for transverse coamings in protected areas.

6.1.4

When two hatches are close to each other, under deck stiffeners are to be fitted to connect the longitudinal coamings in order to maintaining the continuity of their strength.

Similar stiffening is to be provided over 2 frame spacings at ends of hatches exceeding 9 frame spacings in length.

In some cases, the Society may require the continuity of coamings to be maintained above the deck.

6.1.5

Where watertight metallic hatch covers are fitted, other arrangements of equivalent strength may be adopted.

6.2 Load model

6.2.1

The wave lateral pressure, P_C in kN/m^2, to be considered as acting on the hatch coamings is defined in [6.2.2] and [6.2.3].

6.2.2

The wave lateral pressure, P_C in kN/m^2, on the No. 1 forward transverse hatch coaming is to be taken equal to:

- P_C = 220, when a forecastle is fitted in accordance with Ch 1, Sec 1, [1].
- P_C = 290, in the other cases.

6.2.3

The wave lateral pressure, P_C in kN/ m^2, on the hatch coamings other than the No. 1 forward transverse hatch coaming is to be taken equal to:

P_C = 220

6.2.4

For cargo holds intended for the carriage of ballast water, the liquid internal pressures applied on hatch coaming is also to be determined according to Pt 1, Ch 4, Sec 6.

6.3 Scantlings

6.3.1 Plating

The net thickness, in mm, of the hatch coaming plate is not to be taken less than the greater value given by the following formulae:

$$t = 0.016b\sqrt{\frac{P_C}{0.95R_{eH}}}$$

$t = 9.5$

6.3.2 Stiffeners

The net section modulus, Z, in cm^3, of longitudinal or transverse stiffeners fitted on hatch coamings is not to be taken less than:

$$Z = 1.21\frac{P_C\, s\, \ell^2}{f_{bc}\, c_p\, R_{eH}}$$

where:

f_{bc} : Coefficient taken equal to:

f_{bc} = 16 in general.

f_{bc} = 12 for the end span of stiffeners sniped at the coaming corners.

c_p : Ratio of the plastic section modulus to the elastic section modulus of the stiffeners with an attached plate breadth, in mm, equal to 40 t, where t is the plate net thickness.

c_p = 1.16 in the absence of more precise evaluation.

6.3.3 Coaming stays

At the connection with deck, the net section modulus Z, in cm^3, and the net thickness t_w, in mm, of the coaming stays designed as beams with flange connected to the deck or sniped and fitted with a bracket (examples shown in Figure 3 and Figure 4) are to be taken not less than:

$$Z = \frac{s_C\, P_C\, H_C^2}{1.9\, R_{eH}}$$

$$t_w = \frac{s_C\, P_C\, H_C}{0.5\, h\, R_{eH}}$$

where:

H_C : Stay height, in m.

s_C : Stay spacing, in mm.

h : Stay depth, in mm, at the connection with deck.

Figure 3 : Coaming stay (example 1)

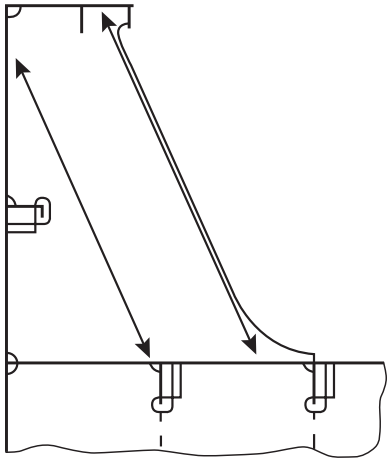

Figure 4 : Coaming stay (example 2)

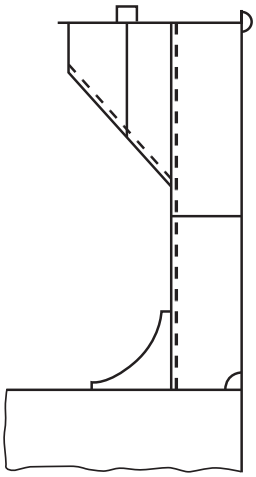

For calculating of offered section modulus of coaming stays, the face plate area may be taken into account only when it is welded with full penetration welds to the deck plating and provided with adequate under deck structure supporting the coaming stay in the deck structure.

For other designs of coaming stays, such as those shown in Figure 5 and Figure 6, the stress levels determined through a grillage analysis or finite element analysis, as the case may be, apply and are to be checked at the highest stressed locations. The stress levels are to comply with the following formulae:

$\sigma \leq 0.95\ R_{eH}$

$\tau \leq 0.5\ R_{eH}$

Figure 5 : Coaming stay (example 3)

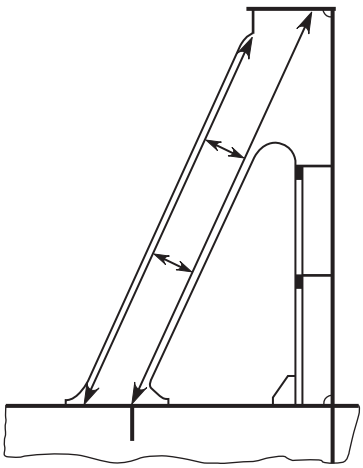

Figure 6 : Coaming stay (example 4)

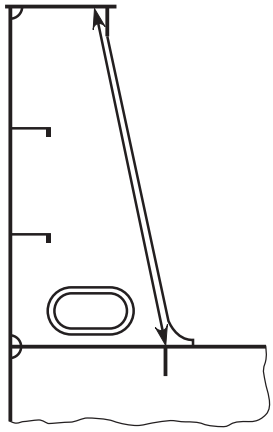

6.3.4 Local details

The design of local details is to comply with the requirements in this section ensuring adequate structural continuity from the hatch covers into the supporting deck structure.

Hatch coamings and supporting structures are to be adequately stiffened to accommodate the loading from hatch covers, in longitudinal, transverse and vertical directions.

The normal stress σ and the shear stress τ, in N/mm^2, induced in the under deck structures by the loads transmitted by stays are to comply with the following formulae:

$\sigma \leq 0.95\ R_{eH}$

$\tau \leq 0.5\ R_{eH}$

Unless otherwise stated, weld connections and materials are to be dimensioned and selected in accordance with the requirements of the Society.

Double continuous fillet welding is to be adopted for the connections of stay webs with deck plating and the weld leg length is not to be less than 0.62 t_w, where t_w is the gross thickness of the stay web.

Toes of stay webs are to be connected to the deck plating with partial penetration double bevel welds extending over a distance not less than 15% of the stay width.

7 WEATHERTIGHTNESS, CLOSING ARRANGEMENT, SECURING DEVICES AND STOPPERS

7.1 Weathertightness

7.1.1

Where the hatchway is exposed, the weathertightness is to be ensured by gaskets and clamping devices sufficient in number and quality.

7.1.2

In general, a minimum of two securing devices or equivalent is to be provided on each side of the hatch cover.

7.2 Gaskets

7.2.1

The weight of hatch covers and any cargo stowed thereon, together with inertia forces generated by ship motions, are to be transmitted to the ship's structure.

7.2.2

The sealing is to be obtained by a continuous gasket of relatively soft elastic material compressed to achieve the necessary weathertightness. Similar sealing is to be arranged between cross-joint elements.

Where fitted, compression flat bars or angles are to be well rounded where in contact with the gasket and to be made of a corrosion-resistant material.

7.2.3

The gasket and the securing arrangements are to maintain their efficiency when subjected to large relative movements between the hatch cover and the ship's structure or between hatch cover elements.

If necessary, suitable devices are to be fitted to limit such movements.

7.2.4

The gasket material is to be of a quality suitable for all environmental conditions likely to be encountered by the ship, and is to be compatible with the cargoes transported.

The material and form of gasket selected are to be considered in conjunction with the type of hatch cover, the securing arrangement and the expected relative movement between the hatch cover and the ship's structure.

The gasket is to be effectively secured to the hatch cover.

7.2.5

Coamings and steel parts of hatch covers in contact with gaskets are to have no sharp edges.

7.2.6

Metallic contact is required to ensure earthing connection between the hatch cover and the hull structures.

7.3 Closing arrangement, securing devices and stoppers

7.3.1 General

Panel hatch covers are to be secured by appropriate devices (bolts, wedges or similar) suitably spaced along the coamings and between cover elements.

Hatch covers provided with special sealing devices, insulated hatch covers, flush hatch covers and those having coamings of a reduced height according to [2.1.2] are to be considered by the Society on a case-by-case basis.

7.3.2 Arrangements

The securing and stopping devices are to be arranged so as to ensure sufficient compression on gaskets between hatch covers and coamings and between adjacent hatch covers.

Arrangement and spacing are to be determined with due attention to the effectiveness for weathertightness, depending on the type and the size of the hatch cover, as well as on the stiffness of the hatch cover edges between the securing devices.

At cross-joints of multi-panel covers, (male/female) vertical guides are to be fitted to prevent excessive relative vertical deflections between loaded/unloaded panels.

The location of stoppers is to be compatible with the relative movements between hatch covers and the ship's structure in order to prevent damage to them. The number of stoppers is to be as small as possible.

7.3.3 Spacing

The spacing of the securing arrangements is not to be greater than 6 m.

7.3.4 Construction

Securing arrangements with reduced scantlings may be accepted provided it can be demonstrated that the possibility of water reaching the deck is negligible.

Securing devices are to be of reliable construction and securely attached to the hatchway coamings, decks or hatch covers.

Individual securing devices on each hatch cover are to have approximately the same stiffness characteristics.

7.3.5 Area of securing devices

The gross cross area of each securing device is not to be less than the value obtained, in cm^2, from the following formula:

$$A = 1.4\ S_S \left(\frac{235}{R_{eH}}\right)^{\alpha}$$

where:

S_S : Spacing, in m, of securing devices.

α : Coefficient taken equal to:

$\alpha = 0.75$ for $R_{eH} > 235$ N/mm^2.

$\alpha = 1.0$ for $R_{eH} \leq 235$ N/mm^2.

In the above calculations, R_{eH} may not be taken greater than 0.7 R_m.

Between hatch cover and coaming and at cross-joints, a packing line pressure sufficient to obtain weathertightness is to be maintained by securing devices. For packing line pressures exceeding 5 N/mm, the net cross area A is to be increased in direct proportion. The packing line pressure is to be specified.

In the case of securing arrangements which are particularly stressed due to the unusual width of the hatchway, the net cross area A of the above securing arrangements is to be determined through direct calculations.

7.3.6 Inertia of edges elements

The hatch cover edge stiffness is to be sufficient to maintain adequate sealing pressure between securing devices.

The moment of inertia of edge elements is not to be less than the value obtained, in cm^4, from the following formula:

$$I = 6\ P_L\ S_S^4$$

where:

P_L : Packing line pressure, in N/mm, to be taken not less than 5.

S_S : Spacing, in m, of securing devices.

7.3.7 Diameter of rods or bolts

Rods or bolts are to have a gross diameter not less than 19 mm for hatchways exceeding 5 m^2 in area.

7.3.8 Stoppers

Hatch covers are to be effectively secured, by means of stoppers, against the transverse forces arising from a pressure of 175 kN/m^2.

With the exclusion of No. 1 hatch cover, hatch covers are to be effectively secured, by means of stoppers, against the longitudinal forces acting on the forward end arising from a pressure of 175 kN/m^2.

No. 1 hatch cover is to be effectively secured, by means of stoppers, against the longitudinal forces acting on the forward end arising from a pressure of 230 kN/m^2. This pressure may be reduced to 175 kN/m^2 if a forecastle is fitted in accordance with Ch 1, Sec 1, [1].

The equivalent stress in stoppers, their supporting structures and calculated in the throat of the stopper welds is to be equal to or less than the allowable value, equal to 0.8 R_{eH}.

7.4 Cleats

7.4.1

Where rod cleats are fitted, resilient washers or cushions are to be incorporated.

7.4.2

Where hydraulic cleating is adopted, a positive means is to be provided to ensure that it remains mechanically locked in the closed position in the event of failure of the hydraulic system.

8 DRAINAGE

8.1 Arrangement

8.1.1

Drainage is to be arranged inside the line of gaskets by means of a gutter bar or vertical extension of the hatch side and end coaming.

8.1.2

Drain openings are to be arranged at the ends of drain channels and are to be provided with efficient means for preventing ingress of water from outside, such as non-return valves or equivalent.

8.1.3

Cross-joints of multi-panel hatch covers are to be arranged with drainage of water from the space above the gasket and a drainage channel below the gasket.

8.1.4

If a continuous outer steel contact is arranged between the cover and the ship's structure, drainage from the space between the steel contact and the gasket is also to be provided.

SECTION 6
ADDITIONAL CLASS NOTATION GRAB

SYMBOLS

M_{GR} : Mass of unladen grab, in t.

1 GENERAL

1.1 Application

1.1.1

The additional class notation GRAB [X] is assigned, in accordance with Pt 1, Ch 1, Sec 1, [3.2.2], to ships with holds designed for loading/unloading by grabs having a maximum mass of unladen grab, in tons up to [X] tons, in compliance with the requirements of this section.

1.1.2

It is to be noted that this additional class notation does not negate the use of heavier grabs, but the owner and operators are to be made aware of the increased risk of local damage and possible early renewal of inner bottom plating if heavier grabs are used regularly or occasionally to discharge cargo.

2 SCANTLINGS

2.1 Plating

2.1.1 General

The net thickness of plating of inner bottom and vertical sloped cargo hold; excluding bilge wells, is to be taken as the greater of the following values:

- t, as obtained according to requirements in Pt 1, Ch 6 and Pt 1, Ch 7.
- t_{GR}, as defined in [2.1.2] and [2.1.3].

2.1.2 Inner bottom plating

The net thickness t_{GR}, in mm, of the inner bottom plating is to be obtained from the following formula:

$$t_{GR} = 0.62\sqrt{bk}\left(\frac{M_{GR}}{20}\right)^{0.25}$$

2.1.3 Vertical and sloped cargo hold boundaries

The net thickness t_{GR}, in mm, as defined in this sub-section apply to the following structural elements.

- Hopper tank sloped plating.
- Transverse lower stool plating.
- Transverse plane bulkhead plating.
- Face plates of transverse corrugated bulkheads without lower stool.
- Inner hull.

Up to a height of 3.0 m above, the lowest point of the inner bottom is to be obtained from the following formula:

$$t_{GR} = 0.55\sqrt{bk}\left(\frac{M_{GR}}{20}\right)^{0.25}$$

PART 2 CHAPTER 2

OIL TANKERS

Table of Contents

SECTION 1
General Arrangement Design
1 General
2 Separation of Cargo Tanks
3 Double Hull Arrangement
4 Access Arrangements
SECTION 2
Structural Design Principles
1 Corrosion Protection
SECTION 3
Hull Local Scantling
1 Primary Supporting Members in Cargo Hold Region
2 Vertically Corrugated Bulkheads
SECTION 4
Hull Outfitting
1 Supporting Structures For Components Used In Emergency Towing Arrangements
2 Miscellaneous Deck Attachments
3 Guard Rails and Bulwarks

SECTION 1
GENERAL ARRANGEMENT DESIGN

1 GENERAL

1.1 General

1.1.1

This section covers the general structural arrangement requirements for oil tankers, which are based on national and international regulations.

2 SEPARATION OF CARGO TANKS

2.1 General

2.1.1

The designer's attention is to be drawn on the arrangement of the cargo pump room, cargo tanks, slop tanks and cofferdams, main cargo control stations, control stations, accommodation and service spaces as well as on the need to separate the cargo tanks from the machinery space.

[RCN1 to 01 JAN 2020]

2.1.2 DELETED [RCN1 to 01 JAN 2020]

[RCN1 to 01 JAN 2020]

3 DOUBLE HULL ARRANGEMENT

3.1 General

3.1.1

All oil tankers are to be provided with double bottom tanks and spaces, and double side tanks and spaces, in accordance with Pt 1, Ch 2, Sec 3. The double bottom and double side tanks and spaces, protect the cargo tanks or spaces, and are not to be used for the carriage of oil cargoes.

3.1.2

Cargo tanks are to be of a size and arrangement that hypothetical oil outflow from side and bottom damage, anywhere in the length of the ship, is limited.

4 ACCESS ARRANGEMENTS

4.1 Special requirements for oil tankers

4.1.1

Where a duct keel or pipe tunnel is fitted, provision is to be made for at least two exits to the open deck arranged at a maximum distance from each other. The duct keel or pipe tunnel is not to pass into machinery

spaces. The aft access may lead from the pump room to the duct keel. Where an aft access is provided from the pump room to the duct keel, the access opening from the pump room to the duct keel is to be provided with an oil-tight cover plate or a watertight door.

Mechanical ventilation is to be provided and such spaces are to be sufficiently ventilated prior to entry. A notice board is to be fitted at each entrance to the pipe tunnel stating that before any attempt is made to enter, the ventilating fan must have been in operation for a sufficient period. In addition, the atmosphere in the tunnel is to be sampled by a gas monitor, and where an inert gas system is fitted in cargo tanks, an oxygen monitor is to be provided.

4.1.2

Where a watertight door is fitted in the pump room for access to the duct keel, the scantlings of the watertight door are to comply with the requirements of the individual Society and the following additional requirements:

a) The watertight door is to be capable of being manually closed from outside the main pump room entrance, in addition to bridge operation. A means of indicating whether the door is open or closed is to be provided locally and on the bridge.

b) A notice is to be affixed at each operating position to the effect that the watertight door is to be kept closed during normal operations of the ship, except when access to the pipe tunnel is required.

4.1.3

Special consideration is to be given to any proposals to fit permanent repair/maintenance access openings with oil-tight covers in cargo tank bulkheads. Attention is drawn to the relevant national regulations concerning load line and oil outflow aspects of such arrangements.

SECTION 2
STRUCTURE DESIGN PRINCIPLES

1 CORROSION PROTECTION

1.1 General

1.1.1 Cathodic protection systems in cargo tanks

Cathodic protection systems, if fitted in cargo tanks, are to comply with [1.2].

1.1.2 Paint containing aluminium

Paint containing aluminium, when used in cargo tanks, is to comply with [1.3].

1.2 Internal cathodic protection systems

1.2.1

When a cathodic protection system is to be fitted to steel structures in tanks used for liquid cargo with flash point below 60°C, a plan of the fitting arrangement is to be submitted for approval. The arrangements are to be considered for safety against fire and explosion. This approval also applies to adjacent tanks.

1.2.2

Permanent anodes in tanks made of, or alloyed with magnesium are not acceptable, except in tanks solely intended for water ballast that are not adjacent to cargo tanks.

Impressed current systems are not to be used in cargo tanks due to the development of chlorine and hydrogen that can result in an explosion.

Aluminium anodes are accepted, however, in tanks with liquid cargo with flash point below 60°C and in adjacent ballast tanks, aluminium anodes are to be located so a kinetic energy of not more than 275 J is developed in the event of their loosening and becoming detached.

1.2.3

Aluminium anodes are to be located in such a way that they are protected from falling objects. They are not to be located under tank hatches or Butterworth openings unless protected by adjacent structure.

1.2.4

Tanks, in which anodes are installed, are to have sufficient holes for the circulation of air to prevent gas from collecting in pockets.

1.3 Paint containing aluminium

1.3.1

The use of aluminium coatings containing greater than 10% aluminium by weight in the dry film is prohibited in cargo tanks, cargo tank deck area, pump rooms, cofferdams or any other area where cargo vapour may accumulate.

1.3.2

Aluminised pipes may be permitted in ballast tanks, in inerted cargo tanks and, provided the pipes are protected from accidental impact, in hazardous areas on open deck.

SECTION 3
HULL LOCAL SCANTLING

SYMBOLS

For symbols not defined in this section, refer to Pt 1, Ch 1, Sec 4.

S : Primary supporting member spacing as defined in Pt 1, Ch 3, Sec 7, [1.2.2], in m.

$C_{t\text{-}pr}$: Permissible shear stress coefficient for primary supporting members taken equal to:

$C_{t\text{-}pr}$ = 0.70 for AC-S.

$C_{t\text{-}pr}$ = 0.85 for AC-SD.

$C_{s\text{-}pr}$: Permissible bending stress coefficient for primary supporting members taken equal to:

$C_{s\text{-}pr}$ = 0.70 for AC-S.

$C_{s\text{-}pr}$ = 0.85 for AC-SD.

s_{cg} : Half pitch length of corrugation, in mm. See Figure 4.

ℓ_{cg} : Length of corrugation, in m, which is defined as the distance between the lower stool and the upper stool. Where no lower or upper stool is fitted, ℓ_{cg} is to be measured to lower or upper end as shown in Figure 4.

1 PRIMARY SUPPORTING MEMBERS IN CARGO HOLD REGION

1.1 General

1.1.1

The following requirements relate to the determination of scantlings of the primary supporting members within 0.4 *L* amidships and those outside 0.4 *L* amidships provided that the geometry and fixation of primary supporting member is similar with those amidships.

1.1.2

The section modulus and shear area criteria for primary supporting members contained in this sub-section apply to structural configurations shown in Pt 1, Ch 1, Sec 1, Figure 3 and are applicable to the following structural elements:

a) Floors and girders within the double bottom,

b) Deck transverses,

c) Side transverses within double side structure,

d) Vertical web frames on longitudinal bulkheads with or without cross ties,

e) Horizontal stringers on transverse bulkheads, except those fitted with buttresses or other intermediate supports,

f) Cross ties in wing cargo and centre cargo tanks.

1.1.3

Floors, horizontal stringers, side transverses and vertical webs adjacent to transverse bulkheads which get additional supports by horizontal stringers or buttresses are excluded from the application of this section.

1.1.4

Webs of the primary supporting members are to be stiffened in accordance with Pt 1, Ch 8, Sec 2, [4].

1.1.5

Webs of the primary supporting members are to have a depth of not less than given by the requirements of [1.5.1], [1.7.1] and [1.8.1], as applicable.

1.1.6

In any case, primary supporting members that have open slots for stiffeners are to have a depth not less than 2.5 times the depth of the slots if slots are not closed.

1.1.7

Where it is impracticable to fit a primary supporting member with the required web depth, then it is permissible to fit a member with reduced depth provided that the fitted member has equivalent moment of inertia or deflection to the required member. The required equivalent moment of inertia is to be based on an equivalent section given by the effective width of plating at mid span with required plate thickness, web of required depth and thickness and face plate of sufficient width and thickness to satisfy the required mild steel section modulus.

The equivalent moment of inertia may be also demonstrated by an equivalent member having the same deflection as the required member.

All other rule requirements, such as minimum thicknesses, slenderness ratio, section modulus and shear area, are to be satisfied for the member of reduced depth.

1.2 Design load sets

1.2.1

The design load sets for the evaluation of primary supporting members are given in Table 1.

Table 1 : Design load sets for primary supporting members

Item	Design load set (1) (5) (6)	Load component	Draught	Design load	Loading condition
Double bottom floors and girders (3)	SEA-1	P_{ex}	$0.9T_{sc}$ (2)	S+D	Sea pressure only
	SEA-2	P_{ex}	T_{SC}	S	
	OT-4	$P_{in} - P_{ex}$	$0.6T_{sc}$	S+D	Net pressure difference between cargo pressure and sea pressure
	OT-5	$P_{in} - P_{ex}$	(4)	S	
Side transverses (3)	SEA-1	P_{ex}	$0.9T_{sc}$	S+D	Sea pressure only
	SEA-2	P_{ex}	T_{sc}	S	
	OT-1	P_{in}	T_{SC}	S+D	Cargo pressure only
	OT-2	P_{in}	$0.6T_{sc}$	S+D	
	OT-3	P_{in}	-	S	

Item	Design load set (1) (5) (6)	Load component	Draught	Design load	Loading condition
Deck transverses	SEA-1	P_{ex}	T_{sc}	S+D	Green sea pressure only or other loads on deck
	OT-1	P_{in}	T_{SC}	S+D	Cargo pressure only
	OT-2	P_{in}	$0.6T_{sc}$	S+D	
	OT-3	P_{in}	-	S	
Vertical web frames on longitudinal bulkheads	OT-1	P_{in}	T_{SC}	S+D	Pressure from one side only. Full cargo tank with adjacent cargo tank empty
	OT-2	P_{in}	$0.6T_{sc}$	S+D	
	OT-3	P_{in}	-	S	
Horizontal stringers on transverse bulkhead	OT-1	P_{in}	T_{SC}	S+D	Pressure from one side only. Full cargo tank with adjacent forward or aft cargo tank empty.
	OT-2	P_{in}	$0.6T_{sc}$	S+D	
	OT-3	P_{in}	-	S	
Cross ties in centre tanks	OT-1	$\frac{P_{in-pt}+P_{in-stb}}{2}$	T_{SC}	S+D	Full wing cargo tanks, centre tank empty.
	OT-2	$\frac{P_{in-pt}+P_{in-stb}}{2}$	$0.6T_{sc}$	S+D	
	OT-3	P_{in}	-	S	
Cross ties in wing tanks	OT-6	$\frac{P_{in}+P_{ex}}{2}$	T_{sc}	S+D	Full centre tank, wing cargo tanks empty.
	OT-7	$\frac{P_{in}+P_{ex}}{2}$	$0.6T_{sc}$	S+D	
	OT-8	$\frac{P_{in}+P_{ex}}{2}$	T_{sc}	S	

where:

P_{in-pt} : Design pressure from port side wing cargo tank, in kN/m^2.

P_{in-stb} : Design pressure from starboard side wing cargo tank, in kN/m^2.

(1) The static and dynamic load components are to be determined in accordance with Pt 1, Ch 4, Sec 7, Table 1.

(2) If the loading condition where the combination of an empty cargo tank and a mean ship's draught greater than 0.9 T_{sc} is included in ship's loading manual, the maximum corresponding draught is to be considered.

(3) Draughts specified for bottom floors, girders and side transverses are based on operational limits specified in Pt 1, Ch 4, Sec 8, [2] and Pt 1, Ch 4, Sec 8, [3]. Where the optional loading conditions exceed the minimum Rule required loading conditions, the draughts will be subject to special consideration.

(4) For tankers with two oil-tight longitudinal bulkheads, the draught is to be taken as 0.25 T_{sc}. For tankers with a centreline bulkhead, the draught is to be taken as 0.33 T_{sc}.

(5) When the ship's configuration cannot be described by the structural members or structural configurations identified above, then the applicable Design Load Sets to determine the scantling requirements of primary supporting member are to be selected so as to specify all applicable cases from the following:

- A full tank on one side of the member with the tank or space on the other side empty.
- A full tank on one side of the member with the external pressure minimised.
- External pressure maximised with the adjacent tank or space empty.

The boundary is to be evaluated for loading from both sides. Design Load Sets are to be selected based on the tank or space contents and are to maximise the net pressure on the structural boundary, the draught to use is to be taken in accordance with the Design Load Set and this table. Design Load Sets covering the S and S+D design load combinations are to be selected.

(6) For a void or dry space, the pressure component from the void side is to be ignored.

1.3 Floors in double bottom

1.3.1 Structural arrangement

Plate floors are to be arranged in way of transverse bulkheads and bulkhead stools.

1.3.2 Net shear area

The net shear area, $A_{shr\text{-}n50}$ in cm^2, of the floors at any position in the floor is not to be less than:

$$A_{shr-n50} = \frac{8.5Q}{C_{t-pr}\,\tau_{eH}}$$

where:

Q : Design shear force, in kN.

$$Q = f_{shr}\,P\,S\,\ell_{shr}$$

f_{shr} : Shear force distribution factor:

$$f_{shr} = f_{shr-i}\left(1 - \frac{2y_i}{\ell_{shr}}\right)$$ but not to be taken as less than 0.2.

$f_{shr\text{-}i}$: Shear force distribution factor at the end of the span, ℓ_{shr}, as given in Table 2.

ℓ_{shr} : Effective shear span, of the double bottom floor, in m, as shown in Figure 2. In way of bracket ends, the effective shear span is measured to the toes of the effective end bracket, as defined in Pt 1, Ch 3, Sec 7, [1.1.7]. Where the floor ends on a girder at a hopper or stool structure, the effective shear span is measured to a point that is one-half of the distance from the girder to the adjacent bottom and inner-bottom longitudinal, as shown in Figure 2.

y_i : Distance from the considered cross section of the floor to the nearest end of the effective shear span, ℓ_{shr} in m.

P : Design pressure given in Table 1 for the design load set being considered, calculated at mid point of effective shear span, ℓ_{shr} of a floor located midway between transverse bulkheads or transverse bulkhead and wash bulkhead, where fitted, in kN/m^2.

Table 2 : Shear force distribution factors of floors

Structural configuration	Centre tank (f_{shr3} in Figure 1)	Wing tank	
		At inboard end (f_{shr2} in Figure 1)	At hopper knuckle end (f_{shr1} in Figure 1)
Ships with centreline longitudinal bulkhead	-	0.40	0.60
Ships with two longitudinal bulkheads	0.5	0.50	0.65

Figure 1 : Shear force distribution factors of floors

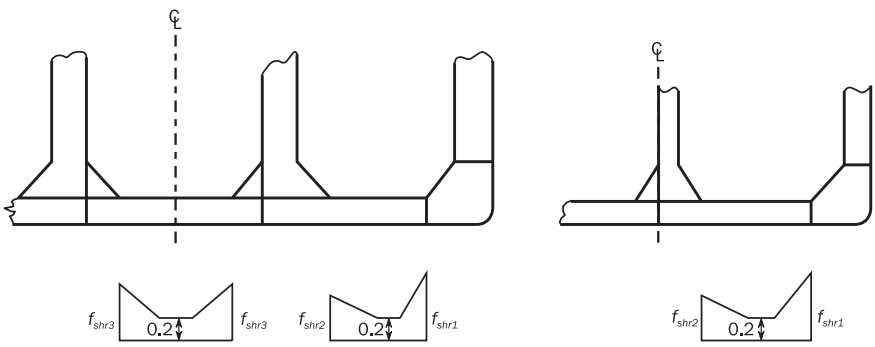

Figure 2 : Effective shear span of floors

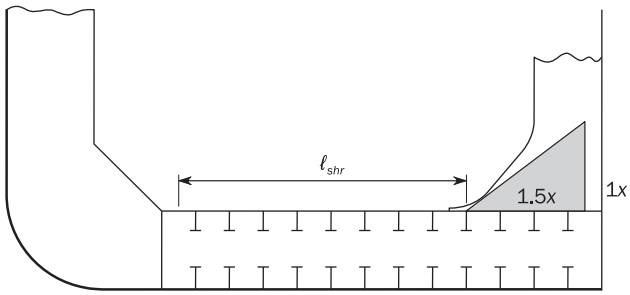

Typical arrangement with hopper and end bracket

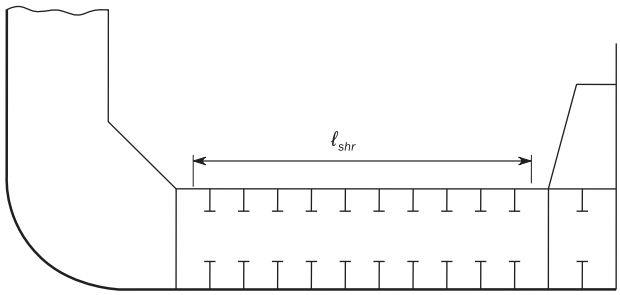

Typical arrangement with hopper and stool

1.4 Girders in double bottom

1.4.1 Structural arrangement

Continuous double bottom girders are to be arranged at the centreline or duct keel, at the hopper side and in way of longitudinal bulkheads and bulkhead stools.

1.4.2 Net shear area of centre girders

For double bottom centre girders where no longitudinal bulkhead is fitted above, the net shear area, $A_{shr\text{-}n50}$ in cm^2, of the double bottom centre girder in way of the first bay from each transverse bulkhead and wash bulkhead, where fitted, is not to be less than:

$$A_{shr-n50} = \frac{8.5Q}{C_{t-pr}\,\tau_{eH}}$$

where:

Q : Design shear force, in kN, taken as:

$$Q = 0.21\, n_1\, n_2\, P\, \ell_{shr}^2$$

ℓ_{shr} : Effective shear span as defined in [1.3.2].

P : Design pressure, in kN/m^2, as defined in [1.3.2].

n_1 : Coefficient taken as:

$$n_1 = 0.00935\left(\frac{\ell_{shr}}{S}\right)^2 - 0.163\left(\frac{\ell_{shr}}{S}\right) + 1.289$$

n_2 : Coefficient taken as:

$$n_2 = 1.3 - \left(\frac{S}{12}\right)$$

S : Double bottom floor spacing, in m, as defined in Pt 1, Ch 3, Sec 7, [1.2.2].

1.4.3 Net shear area of side girders

For double bottom side girders where no longitudinal bulkhead is fitted above, the net shear area, $A_{shr\text{-}n50}$ in cm^2, of the double bottom side girder in way of the first bay from each transverse bulkhead and wash bulkhead, where fitted, is not to be less than:

$$A_{shr-n50} = \frac{8.5Q}{C_{t-pr}\ \tau_{eH}}$$

where:

Q : Design shear force, in kN.

$$Q = 0.14\ n_3\ n_4\ P\ \ell_{shr}^2$$

n_3 : Coefficient taken as:

$$n_3 = 1.072 - 0.0357\left(\frac{\ell_{shr}}{S}\right)$$

n_4 : Coefficient taken as:

$$n_4 = 1.2 - \left(\frac{S}{18}\right)$$

S : Double bottom floor spacing, in m, as defined in Pt 1, Ch 3, Sec 7, [1.2.2].

ℓ_{shr} : Effective shear span as defined in [1.3.2].

P : Design pressure, in kN/m^2, as defined in [1.3.2].

1.5 Deck transverses

1.5.1 Web depth

The web depth of under deck transverses is not to be less than:

- 0.20 $\ell_{bdg\text{-}dt}$ for deck transverses in the wing cargo tanks of ships with two longitudinal bulkheads.
- 0.13 $\ell_{bdg\text{-}dt}$ for deck transverses in the centre cargo tanks of ships with two longitudinal bulkheads. The web depth of deck transverses in the centre cargo tank is not to be less than 90% of that of the deck transverses in the wing cargo tank.
- 0.10 $\ell_{bdg\text{-}dt}$ for the deck transverses of ships with a centreline longitudinal bulkhead.
- The web height required in [1.1.6].

The web depth of above deck transverses is not to be less than:

- 0.10 $\ell_{bdg\text{-}dt}$
- The web height required in [1.1.6].

where:

$\ell_{bdg\text{-}dt}$: Effective bending span, in m, as defined in [1.5.2].

1.5.2 Net section modulus of deck transverses fitted below the upper deck

The net section modulus of deck transverses fitted below the upper deck, in cm^3, is not to be less than $Z_{in\text{-}n50}$ and $Z_{ex\text{-}n50}$ as given by the following formulae.

The net section modulus of the deck transverses fitted below the upper deck in the wing cargo tanks is also not to be less than required for the deck transverses fitted below the upper deck in the centre tanks.

$$Z_{in-n50} = \frac{850\, M_{in}}{C_{s-pr}\, R_{eH}}$$

$$Z_{ex-n50} = \frac{850\, M_{ex}}{C_{s-pr}\, R_{eH}}$$

where:

M_{in} : Design bending moment due to cargo pressure, in kNm, taken as:

- For deck transverses in wing cargo tanks of ships with two longitudinal bulkheads, and for deck transverses in cargo tanks of ships with a centreline longitudinal bulkhead:

  $M_{in} = 0.042\, \varphi_t\, P_{in-dt}\, S\, \ell^2_{bdg-dt} + M_{st}$ but is not to be taken as less than M_0.

- For deck transverses in centre cargo tank of ships with two longitudinal bulkheads:

  $M_{in} = 0.042\, \varphi_t\, P_{in-dt}\, S\, \ell^2_{bdg-dt} + M_{vw}$ but is not to be taken as less than M_0.

M_{st} : Bending moment transferred from the side transverse, in kNm:

$$M_{st} = c_{st}\, \beta_{st}\, P_{in-st}\, S\, \ell^2_{bdg-st}$$

where a cross tie is fitted in a wing cargo tank and $\ell_{bdg\text{-}st\text{-}ct}$ is greater than 0.7 $\ell_{bdg\text{-}st}$, then $\ell_{bdg\text{-}st}$ in the above formula may be taken as $\ell_{bdg\text{-}st\text{-}ct}$.

M_{vw} : Bending moment transferred from the vertical web frame on the longitudinal bulkhead, in kNm:

$$M_{vw} = c_{vw}\, \beta_{vw}\, P_{in-vw}\, S\, \ell^2_{bdg-vw}$$

where $\ell_{bdg\text{-}vw\text{-}ct}$ is greater than 0.7 $\ell_{bdg\text{-}vw}$, then $\ell_{bdg\text{-}vw}$ in the above formula may be taken as $\ell_{bdg\text{-}vw\text{-}ct}$. For vertically corrugated bulkheads, M_{vw} is to be taken equal to bending moment in upper end of corrugation over the spacing between deck transverses.

M_0 : Minimum bending moment, in kNm.

$$M_0 = 0.083\, P_{in-dt}\, S\, \ell^2_{bdg-dt}$$

M_{ex} : Design bending moment due to green sea pressure, in kNm.

$$M_{ex} = 0.067\, P_{ex-dt}\, S\, \ell^2_{bdg-dt}$$

$P_{in\text{-}dt}$: Design cargo pressure given in Table 1 for the design load set being considered, calculated at mid-point of effective bending span, $\ell_{bdg\text{-}dt}$ of the deck transverse located at mid tank, in kN/m^2.

$P_{in\text{-}st}$: Corresponding design cargo pressure in wing cargo tank given in Table 1 for the design load set being considered, calculated at the mid-point of effective bending span, $\ell_{bdg\text{-}st}$ of the side transverse located at mid-tank, in kN/m^2.

$P_{in\text{-}vw}$: Corresponding design cargo pressure in the centre cargo tank of ships with two longitudinal bulkheads given in Table 1 for the design load set being considered, calculated at mid-point of effective bending span, $\ell_{bdg\text{-}vw}$ of the vertical web frame on the longitudinal bulkhead located at mid-tank, in kN/m^2.

$P_{ex\text{-}dt}$: Design green sea pressure given in Table 1 for the design load set being considered, calculated at mid-point of effective bending span, $\ell_{bdg\text{-}dt}$ of the deck transverse located at mid tank, in kN/m^2.

φ_t : Coefficient taken as:

$$\varphi_t = 1 - 5\left(\frac{y_{toe}}{\ell_{bdg-dt}}\right)$$ but not taken less than 0.6.

y_{toe} : Distance from the end of effective bending span, ℓ_{bdg-dt} to the toe of the end bracket of the deck transverse, in m.

β_{st} : Coefficient taken as:

$$\beta_{st} = 0.9\left(\frac{\ell_{bdg-st}}{\ell_{bdg-dt}}\right)\left(\frac{I_{dt-n50}}{I_{st-n50}}\right)$$ but not taken less than 0.10 or greater than 0.65.

β_{vw} : Coefficient taken as:

$$\beta_{vw} = 0.9\left(\frac{\ell_{bdg-vw}}{\ell_{bdg-dt}}\right)\left(\frac{I_{dt-n50}}{I_{vw-n50}}\right)$$ but not taken less than 0.10 or greater than 0.50.

ℓ_{bdg-dt} : Effective bending span of the deck transverse, in m, see Pt 1, Ch 3, Sec 7, [1.1.6] and Figure 3, but is not to be taken as less than 60% of the breadth of the tank at the location being considered.

ℓ_{bdg-st} : Effective bending span of the side transverse, in m, between the deck transverse and the bilge hopper, see Pt 1, Ch 3, Sec 7, [1.1.6] and Figure 3.

$\ell_{bdg-st-ct}$: Effective bending span of the side transverse, in m, between the deck transverse and the mid depth of the cross tie, where fitted in wing cargo tank, see Pt 1, Ch 3, Sec 7, [1.1.6].

ℓ_{bdg-vw} : Effective bending span of the vertical web frame on the longitudinal bulkhead, in m, between the deck transverse and the bottom structure, see Pt 1, Ch 3, Sec 7, [1.1.6] and Figure 3.

$\ell_{bdg-vw-ct}$: Effective bending span of the vertical web frame on longitudinal bulkhead, in m, between the deck transverse and the mid depth of the cross tie, see Pt 1, Ch 3, Sec 7, [1.1.6].

I_{dt-n50} : Net moment of inertia of the deck transverse at mid-span with an effective breadth of attached plating specified in Pt 1, Ch 3, Sec 7, [1.3.2], in cm^4.

I_{st-n50} : Net moment of inertia of the side transverse at mid-span with an effective breadth of attached plating specified in Pt 1, Ch 3, Sec 7, [1.3.2], in cm^4.

I_{vw-n50} : Net moment of inertia of the longitudinal bulkhead vertical web frame at mid-span with an effective breadth of attached plating specified in Pt 1, Ch 3, Sec 7, [1.3.2], in cm^4.

c_{st} : Coefficient given in Table 3.

c_{vw} : Coefficient given in Table 3.

Table 3 : Values of c_{st} and c_{vw} for deck transverses

Structural configuration			c_{st}	c_{vw}
Ships with centreline longitudinal bulkhead			0.056	-
Ships with two longitudinal bulkheads	Cross tie in centre cargo tank	M_{vw} based on $\ell_{bdg-vw-ct}$	-	0.044
		M_{st} based on ℓ_{bdg-st} or M_{vw} based on ℓ_{bdg-vw}	0.044	0.016
	Cross ties in wing cargo tanks	M_{st} based on $\ell_{bdg-st-ct}$ or M_{vw} based on $\ell_{bdg-vw-ct}$	0.044	0.044
		M_{st} based on ℓ_{bdg-st} or M_{vw} based on ℓ_{bdg-vw}	0.041	0.015

Figure 3 : Definition of spans of deck, side transverses, vertical web frames on longitudinal bulkheads and horizontal stringers on transverse bulkheads

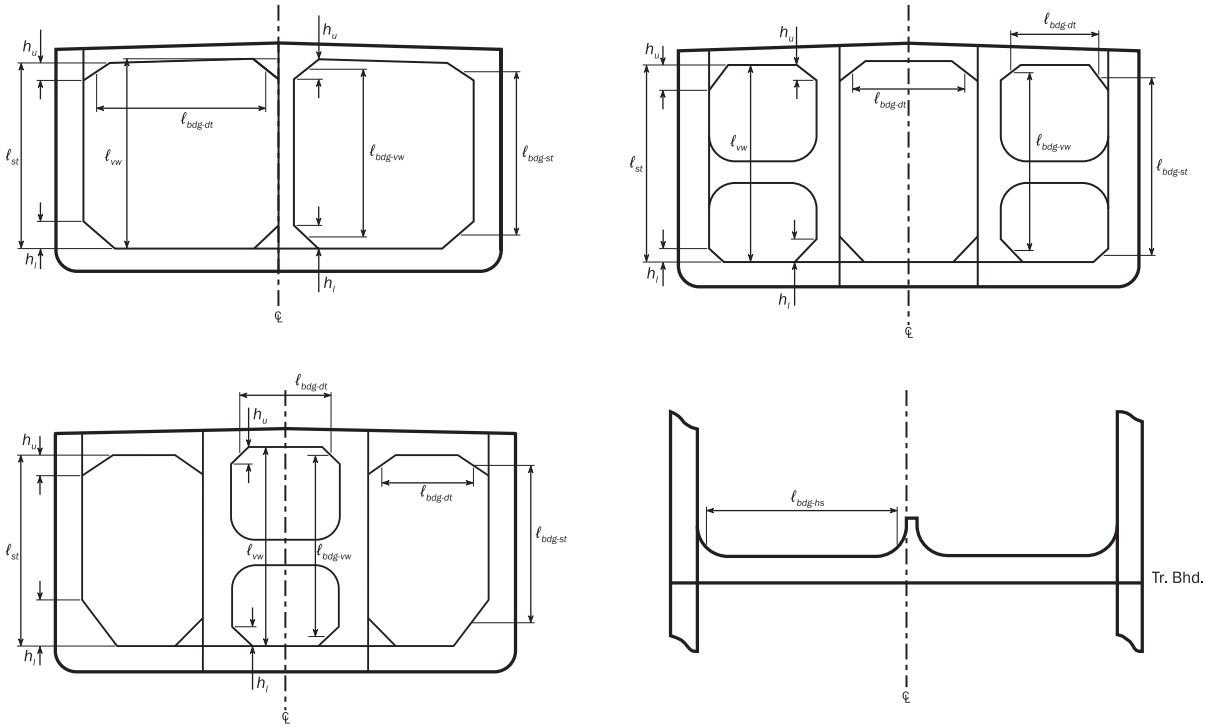

1.5.3 Net shear area of deck transverses fitted below the upper deck

The net shear area of deck transverses fitted below the upper deck, in cm^2, is not to be less than $A_{shr\text{-}in\text{-}n50}$ and $A_{shr\text{-}ex\text{-}n50}$ as given by:

$$A_{shr-in-n50} = \frac{8.5 Q_{in}}{C_{t-pr}\ \tau_{eH}}$$

$$A_{shr-ex-n50} = \frac{8.5 Q_{ex}}{C_{t-pr}\ \tau_{eH}}$$

where:

Q_{in} : Design shear force due to cargo pressure, in kN.

$$Q_{in} = 0.65\ P_{in-dt}\ S\ \ell_{shr} + c_1\ D\ b_{ctr}\ S\ \rho_L\ g$$

Q_{ex} : Design shear force due to green sea pressure, in kN.

$$Q_{ex} = 0.65\ P_{ex-dt}\ S\ \ell_{shr}$$

$P_{in\text{-}dt}$: Design pressure in kN/m^2, defined in [1.5.2].

$P_{ex\text{-}dt}$: Design pressure in kN/m^2, defined in [1.5.2].

$\ell_{bdg\text{-}dt}$: Effective span, in m, defined in [1.5.2].

ℓ_{shr} : Effective shear span, of the deck transverse, in m, see Pt 1, Ch 3, Sec 7, [1.1.7].

c_1 : Coefficient taken as:

- c_1 = 0.04 in way of wing cargo tanks of ships with two longitudinal bulkheads.
- c_1 = 0.00 in way of centre tank of ships with two longitudinal bulkheads.
- c_1 = 0.00 for ships with a centreline longitudinal bulkhead.

b_{ctr} : Breadth of the centre tank, in m.

1.5.4 Deck transverses fitted above the upper deck

When deck transverses are fitted above the upper deck, the net section modulus and shear area of deck transverses are not to be less than Z_{n50} and $A_{shr\text{-}n50}$, in cm^3 and cm^2 respectively, as given by the following formulae. The required section modulus and shear area are to be maintained over the full length of span.

$$z_{n50} = \frac{850\ |P|S\ell_{bdg}^2}{f_{bdg}C_{s-pr}R_{eH}}$$

$$A_{shr-n50} = \frac{8.5\ f_{shr}|P|S\ell_{shr}}{C_{t-pr}\ \tau_{eH}}$$

where:

P : Design pressure given in Table 1 for the design load set being considered, calculated at midpoint of effective bending span, ℓ_{bdg} of the deck transverse located at mid tank, in kN/m^2.

f_{bdg} : Coefficient taken as:

f_{bdg} = 12 for design load set OT-1, OT-2 and OT-3 as defined in Table 1.

f_{bdg} = 15 for design load set SEA-1 as defined in Table 1.

f_{shr} : Coefficient taken as:

f_{shr} = 0.5

l_{bdg} : Effective bending span of the deck transverse fitted above upper deck, in m, measured from inner hull welded to deck to longitudinal bulkhead, or upper stool plating where upper stool is fitted

l_{shr} : Effective shear span of the deck transverse fitted above upper deck, in m, measured from inner hull welded to deck to longitudinal bulkhead, or upper stool plating where upper stool is fitted

As an alternative, the required section modulus and shear area may be obtained by finite element method in accordance with Pt 1, Ch 7 and with in consideration of loading patterns A1, A2 or B1, B2 as defined in Pt 1, Ch 4, Sec 8, [3.2.9] with draught equal to T_{sc} and cargo density of 1.025 t/m^3.

1.5.5 Deck transverse adjacent to transverse bulkhead

The scantling of deck transverse adjacent to the transverse bulkhead is to comply with the requirements of [1.5.2] to [1.5.4] for design green sea pressure only.

1.6 Side transverses

1.6.1 Net shear area

The net shear area, $A_{shr\text{-}n50}$, in cm^2, of side transverses is not to be less than:

$$A_{shr-n50} = \frac{8.5Q}{C_{t-pr}\ \tau_{eH}}$$

where:

Q : Design shear force as follows, in kN:

$Q = Q_u$ for upper part of the side transverse.

$Q = Q_l$ for lower part of the side transverse.

Q_u : Shear force, in kN, taken as:

$$Q_u = S\,[c_u\ \ell_{st}(P_u + P_l) - h_u\ P_u]$$

where a cross tie is fitted in a wing cargo tank and $\ell_{st\text{-}ct}$ is greater than 0.7 ℓ_{st}, then ℓ_{st} in the above formula is taken as $\ell_{st\text{-}ct}$.

Q_l : Shear force, in kN, taken as the greater of the following:

- $S\,[c_l\ \ell_{st}\,(P_u + P_l) - h_l\ P_l]$
- $0.35\,c_l\,S\,\ell_{st}\,(P_u + P_l)$
- $1.2\,Q_u$

where a cross tie is fitted in a wing cargo tank and $\ell_{st\text{-}ct}$ is greater than 0.7 ℓ_{st}, then ℓ_{st} in the above formula is taken as $\ell_{st\text{-}ct}$.

P_u : Design pressure given in Table 1 for the design load set being considered, in kN/m^2, calculated at mid length of tank and at mid height of h_u.

P_l : Design pressure given in Table 1 for the design load set being considered, calculated at mid height h_l located at mid length of tank, in kN/m^2.

ℓ_{st} : Length of the side transverse, in m, taken as follows:

- Where deck transverses are fitted below deck, ℓ_{st} is the length between the flange of the deck transverse and the inner bottom, see Figure 3.
- Where deck transverses are fitted above deck, ℓ_{st} is the length between the elevation of the deck at side and the inner bottom.

$\ell_{st\text{-}ct}$: Length of the side transverse, in m, taken as follows:

- Where deck transverses are fitted below deck, $\ell_{st\text{-}ct}$ is the length between the flange of the deck transverse and mid depth of cross tie, where fitted in wing cargo tank.
- Where deck transverses are fitted above deck, $\ell_{st\text{-}ct}$ is the length between the elevation of the deck at side and mid depth of the cross tie, where fitted in wing cargo tank.

h_u : Effective length of upper bracket of the side transverse, in m, taken as follows:

- Where deck transverses are fitted below deck, h_u is as shown in Figure 3.
- Where deck transverses are fitted above deck:
  - When an inner hull longitudinal bulkhead is arranged with a top wing structure as follows, h_u is taken as the distance between the deck at side and the lower end of slope plate of the top wing structure:
    - The breadth at top of the wing structure is greater than 1.5 times the breadth of the double side and.
    - The angle along a line between the point at base of the slope plate at its intersection with the inner hull longitudinal bulkhead and the point at the intersection of top wing structure and deck is 30 deg or more to vertical.
  - In the other cases: h_u is taken as 0.

h_l : Height of bilge hopper, in m, as shown in Figure 3.

c_u : Coefficient defined in Table 4.

c_l : Coefficient defined in Table 4.

Table 4 : Values of c_u and c_l for side transverses

Structural configuration			c_u		c_l	
Number of side stringers			Less than three	Equal to or greater than three	Less than three	Equal to or greater than three
Ships with a centreline longitudinal bulkhead			0.12	0.09	0.29	0.21
Ships with two longitudinal bulkheads	Cross tie in centre cargo tank					
	Cross ties in wing cargo tanks	Q_u or Q_l based on $\ell_{st\text{-}ct}$				
		Q_u or Q_l based on ℓ_{st}	0.08		0.20	

1.6.2 Shear area over the length of the side transverse

The shear area over the length of the side transverse is to comply with the following. When materials of different yield stress are employed, appropriate adjustments are to be made to account for differences in material yield stress.

a) The required shear area for the upper part is to be maintained over the upper 0.2 ℓ_{shr}.

b) The required shear area for the lower part is to be maintained over the lower 0.2 ℓ_{shr}.

c) Where Q_u and Q_l are determined based on $\ell_{st\text{-}ct}$, the required shear area for the lower part is also to be maintained below the cross tie.

d) For ships without cross ties in the wing cargo tanks, the required shear area between the upper and lower parts is to be reduced linearly towards 50% of the required shear area for the lower part at mid-span.

e) For ships with cross ties in the wing cargo tanks, the required shear area along the span is to be tapered linearly between the upper and lower parts.

where:

ℓ_{shr} : Effective shear span of the side transverse, in m.

$\ell_{shr} = \ell_{st} - h_u - h_l$ where Q_u and Q_l are determined based on ℓ_{st}.

$\ell_{shr} = \ell_{st-ct} - h_u$ where Q_u and Q_l are determined based on $\ell_{st\text{-}ct}$.

ℓ_{st}, $\ell_{st\text{-}ct}$, h_u, h_l, Q_u, Q_l : Parameters defined in [1.6.1].

1.7 Vertical web frames on longitudinal bulkhead

1.7.1 Web depth

The web depth of the vertical web frame on the longitudinal bulkhead is not to be less than:

- 0.14 $\ell_{bdg\text{-}vw}$ for ships with a centreline longitudinal bulkhead.
- 0.09 $\ell_{bdg\text{-}vw}$ for ships with two longitudinal bulkheads.
- The web height required in [1.1.6].

where:

$\ell_{bdg\text{-}vw}$: Effective bending span, in m, defined in [1.7.2].

1.7.2 Net section modulus

The net section modulus, Z_{n50} in cm^3, of the vertical web frame is not to be less than:

$$Z_{n50} = \frac{850M}{C_{s-pr}\, R_{eH}}$$

where:

M : Design bending moment, in kNm, as follows:

$M = c_u\, P\, S\, \ell^2_{bdg-vw}$ for upper part of the web frame.

$M = c_l\, P\, S\, \ell^2_{bdg-vw}$ for lower part of the web frame.

where a cross tie is fitted and $\ell_{bdg\text{-}vw\text{-}ct}$ is greater than 0.7 $\ell_{bdg\text{-}vw}$, then $\ell_{bdg\text{-}vw}$ in the above formula is to be taken as $\ell_{bdg\text{-}vw\text{-}ct}$.

P : Design pressure given in Table 1 for the design load set being considered, calculated at mid-point of the effective bending span, $\ell_{bdg\text{-}vw}$ of the vertical web frame located at mid tank, in kN/m^2.

$\ell_{bdg\text{-}vw}$: Effective bending span of the vertical web frame on the longitudinal bulkhead, between the deck transverse and the bottom structure, in m, see Figure 3.

$\ell_{bdg\text{-}vw\text{-}ct}$: Effective bending span of the vertical web frame on longitudinal bulkhead, between the deck transverse and mid-depth of the cross tie on ships with two longitudinal bulkheads, in m.

c_u : Coefficient defined in Table 5.

c_l : Coefficient defined in Table 5.

Table 5 : Values of c_u and c_l for vertical web frame on longitudinal bulkheads

Structural configuration			c_u	c_l
Ships with a centreline longitudinal bulkhead			0.057	0.071
Ships with two longitudinal bulkheads	Cross tie in centre cargo tank	*M* based on $\ell_{bdg\text{-}vw\text{-}ct}$	0.057	0.071
		M based on $\ell_{bdg\text{-}vw}$	0.012	0.028
	Cross ties in wing cargo tanks	*M* based on $\ell_{bdg\text{-}vw\text{-}ct}$	0.057	0.071
		M based on $\ell_{bdg\text{-}vw}$	0.016	0.032

1.7.3 Section modulus over the length of the vertical web frame

The section modulus over the length of the vertical web frame on the longitudinal bulkhead is to comply with the following. When materials of different yield stress are employed, appropriate adjustments are to be made to account for differences in material yield stress.

a) The required section modulus for the upper part is to be maintained over the upper 0.2 $\ell_{bdg\text{-}vw}$ or 0.2 $\ell_{bdg\text{-}vw\text{-}ct}$ as applicable.

b) The required section modulus for the lower part is to be maintained over the lower 0.2 $\ell_{bdg\text{-}vw}$ or 0.2 $\ell_{bdg\text{-}vw\text{-}ct}$ as applicable.

c) Where the required section modulus is determined based on $\ell_{bdg\text{-}vw\text{-}ct}$, the required section modulus for the lower part is also to be maintained below the cross tie.

d) The required section modulus between the upper and lower parts is to be reduced linearly to 70% of the required section modulus for the lower part at mid-span.

where:

$\ell_{bdg\text{-}vw}$, $\ell_{bdg\text{-}vw\text{-}ct}$: Effective bending span, in m, defined in [1.7.2].

1.7.4 Net shear area

The net shear area, $A_{shr\text{-}n50}$ in cm^2, of the vertical web frame is not to be less than:

$$A_{shr-n50} = \frac{8.5Q}{C_{t-pr}\ \tau_{eH}}$$

where:

Q : Design shear force as follows, in kN:

$Q = Q_u$ for upper part of the web frame.

$Q = Q_l$ for lower part of the web frame.

Q_u : Shear force, in kN, taken as:

$$Q_u = S\,[c_u\ \ell_{vw}\,(P_u + P_l) - h_u\ P_u]$$

where a cross tie is fitted in a centre or wing cargo tank and $\ell_{vw\text{-}ct}$ is greater than 0.7 ℓ_{vw}, then ℓ_{vw} in the above formula is to be taken as $\ell_{vw\text{-}ct}$.

Q_l : Shear force, in kN, taken as the greater of the following:

- $S\,[c_l\ \ell_{vw}(P_u + P_l) - h_l\ P_l]$
- $c_w\ S\ c_l\ \ell_{vw}(P_u + P_l)$
- $1.2\ Q_u$

where a cross tie is fitted in a centre or wing cargo tank and $\ell_{vw\text{-}ct}$ is greater than 0.7 ℓ_{vw}, then ℓ_{vw} in the above formula is to be taken as $\ell_{vw\text{-}ct}$.

P_u : Design pressure given in Table 1 for the design load set being considered, calculated at mid-height of upper bracket of the vertical web frame, h_u located at mid tank, in kN/m^2.

P_l : Design pressure given in Table 1 for the design load set being considered, calculated at mid-height of lower bracket of the vertical web frame, h_l located at mid tank, in kN/m^2.

ℓ_{vw} : Length of the vertical web frame, in m, between the flange of the deck transverse and the inner bottom, see Figure 3.

$\ell_{vw\text{-}ct}$: Length of the vertical web frame, in m, between the flange of the deck transverse and mid-depth of the cross tie, where fitted.

h_u : Effective length of upper bracket of the vertical web frame, in m, as shown in Figure 3.

h_l : Effective length of lower bracket of the vertical web frame, in m, as shown in Figure 3.

c_u : Coefficient defined in Table 6.

c_l : Coefficient defined in Table 6.

c_w : Coefficient taken as:

- c_w = 0.57 for ships with a centreline longitudinal bulkhead,
- c_w = 0.50 for ships with two longitudinal bulkheads.

Table 6 : Values of c_u *and* c_l for vertical web frame on longitudinal bulkhead

Structural configuration		c_u	c_l
Ships with a centreline longitudinal bulkhead		0.17	0.28
Ships with two longitudinal bulkheads	Q_u or Q_l based on $\ell_{vw\text{-}ct}$		
	Q_u or Q_l based on ℓ_{vw}	0.075	0.18

1.7.5 Shear area over the length of the vertical web frame

The shear area over the length of the vertical web frame on the longitudinal bulkhead is to comply with the following. When materials of different yield stress are employed, appropriate adjustments are to be made to account for differences in material yield stress.

a) The required shear area for the upper part is to be maintained over the upper 0.2 ℓ_{shr}.

b) The required shear area for the lower part is to be maintained over the lower 0.2 ℓ_{shr}.

c) Where Q_u and Q_l are determined based on $\ell_{vw\text{-}ct}$, the required shear area for the lower part is also to be maintained below the cross tie.

d) For ships without cross ties in the wing or centre cargo tanks, the required shear area between the upper and lower parts is to be reduced linearly towards 50% of the required shear area for the lower part at mid-span.

e) For ships with cross ties in the wing or centre cargo tanks, the required shear area along the span is to be tapered linearly between the upper and lower parts.

where:

ℓ_{shr} : Effective shear span of the vertical web frame, in m.

$\ell_{shr} = \ell_{vw} - h_u - h_l$ where Q_u and Q_l are determined based on ℓ_{vw}.

$\ell_{shr} = \ell_{vw-ct} - h_u$ where Q_u and Q_l are determined based on $\ell_{vw\text{-}ct}$.

ℓ_{vw}, $\ell_{vw\text{-}ct}$, h_u, h_l, Q_u, Q_l : Parameters defined in [1.7.4].

1.8 Horizontal stringers on transverse bulkheads

1.8.1 Web depth

The web depth of horizontal stringers on transverse bulkhead is not to be less than:

- 0.28 $\ell_{bdg\text{-}hs}$ for horizontal stringers in wing cargo tanks of ships with two longitudinal bulkheads.
- 0.20 $\ell_{bdg\text{-}hs}$ for horizontal stringers in centre tanks of ships with two longitudinal bulkheads, but the web depth of horizontal stringers in centre tank is not to be less than required depth for a horizontal stringer in wing cargo tanks.
- 0.20 $\ell_{bdg\text{-}hs}$ for horizontal stringers of ships with a centreline longitudinal bulkhead.
- The web height required in [1.1.6].

where:

$\ell_{bdg\text{-}hs}$: Effective bending span, in m, defined in [1.8.2].

1.8.2 Net section modulus

The net section modulus, Z_{n50} in cm^3, of the horizontal stringer over the end 0.2 $\ell_{bdg\text{-}hs}$ is not to be less than:

$$Z_{n50} = \frac{850M}{C_{s-pr}\, R_{eH}}$$

where:

M : Design bending moment, in kNm.

$$M = c\, P\, S\, \ell_{bdg-hs}^2$$

P : Design pressure given in Table 1 for the design load set being considered, calculated at mid-point of effective bending span, $\ell_{bdg\text{-}hs}$ and at mid-point of the spacing, S of the horizontal stringer, in kN/m^2.

$\ell_{bdg\text{-}hs}$: Effective bending span of the horizontal stringer, in m, but is not to be taken as less than 50% of the breadth of the tank at the location being considered, see Figure 3.

c : Coefficient taken as:

- c = 0.073 for horizontal stringers in cargo tanks of ships with a centreline bulkhead.
- c = 0.083 for horizontal stringers in wing cargo tanks of ships with two longitudinal bulkheads.
- c = 0.063 for horizontal stringers in the centre tank of ships with two longitudinal bulkheads.

1.8.3 Section modulus over the length of horizontal stringers

The required section modulus at mid effective bending span is to be taken as 70% of that required at the ends, intermediate values are to be obtained by linear interpolation. When materials of different yield stress are employed, appropriate adjustments are to be made to account for differences in material yield stress.

1.8.4 Net shear area

The net shear area, $A_{shr\text{-}n50}$ in cm^2, of the horizontal stringer over the end 0.2 ℓ_{shr} is not to be less than:

$$A_{shr-n50} = \frac{8.5Q}{C_{t-pr}\ \tau_{eH}}$$

where:

Q : Design shear force, in kN.

$$Q = 0.5\,P\ S_{hs}\ \ell_{shr}$$

P : Design pressure given in Table 1 for the design load set being considered, calculated at mid-point of effective bending span, $\ell_{bdg\text{-}hs}$ and at mid-point of the spacing, S of the horizontal stringer, in kN/m^2.

S_{hs} : Spacing, in m, defined in [1.8.2].

ℓ_{shr} : Effective shear span of the horizontal stringer, in m.

1.8.5 Shear area at mid effective shear span

The required shear area at mid effective shear span is to be taken as 50% of that required in the ends, intermediate values are to be obtained by linear interpolation. When materials of different yield stress are employed, appropriate adjustments are to be made to account for differences in material yield stress.

1.9 Cross ties

1.9.1 Maximum applied design axial load

The maximum applied design axial load on cross ties, W_{ct} is to be less than or equal to the permissible load, $W_{ct\text{-}perm}$ as given by:

$$W_{ct} \le W_{ct-perm}$$

where:

W_{ct} : Applied axial load, in kN.

$$W_{ct} = P\ b_{ct}\ S$$

$W_{ct\text{-}perm}$: Permissible load, in kN.

$$W_{ct-perm} = 0.12\ A_{ct-n50}\ \eta_{all}\ \sigma_{cr}$$

P : Maximum design pressure for all the applicable design load sets being considered given in Table 1, calculated at centre of the area supported by the cross tie located at mid tank, in kN/m^2.

b_{ct} : Span, in m, taken as:

- Cross tie fitted in centre cargo tank: $b_{ct} = 0.5\ \ell_{bdg\text{-}vw}$
- Cross ties fitted in wing cargo tanks:
  - $b_{ct} = 0.5\ \ell_{bdg\text{-}vw}$ for design cargo pressure from the centre cargo tank.
  - $b_{ct} = 0.5\ \ell_{bdg\text{-}st}$ for design sea pressure.

$\ell_{bdg\text{-}vw}$: Effective bending span, in m, defined in [1.5.2].

$\ell_{bdg\text{-}st}$: Effective bending span, in m, defined in [1.5.2].

η_{all} : Allowable buckling utilisation factor as defined in Pt 1, Ch 8, Sec 1, [3.3].

σ_{cr} : Critical buckling stress in compression of the cross tie, in N/mm^2, as calculated using the net sectional properties in accordance with Pt 1, Ch 8, Sec 5, [3.1.1].

$A_{ct\text{-}n50}$: Net cross sectional area of the cross tie, in cm^2.

1.9.2 Welded connections

Special attention is to be paid to the adequacy of the welded connections for the transmission of the forces, and also to the stiffening arrangements, in order to provide effective means for transmission of the compressive forces into the webs.

Particular attention is to be paid to the welding at the toes of all end brackets of the cross ties.

1.9.3 Horizontal stiffeners

Horizontal stiffeners are to be located in line with, and attached to, the longitudinals at the ends of the cross ties.

2 VERTICALLY CORRUGATED BULKHEADS

2.1 Application

2.1.1

In addition to the requirements of Pt 1, Ch 6, Sec 4, [1], vertically corrugated bulkheads of oil tankers are also to comply with the requirements of [2.2].

2.2 Scantling requirements

2.2.1 Net plate thickness over the height

The net plate thicknesses as required by [2.2.3] and [2.2.4] are to be maintained for two thirds of the corrugation length, ℓ_{cg} from the lower end. Above that, the net plate thickness may be reduced by 20% from the net thickness required in [2.2.3] for the mid part of the corrugation provided that the net section modulus of the upper end of the corrugation complies with [2.2.4].

2.2.2 Net web plating thickness over the height

The net web plating thickness of the lower 15% of the corrugation, t_w in mm, is to be taken as the greatest value calculated for all applicable design load sets, as given in Pt 1, Ch 6, Sec 2, [2], and given by the following. This requirement is not applicable to corrugated bulkheads without a lower stool.

$$t_w = \frac{1000|Q_{cg}|}{d_{cg}\, C_{t-cg}\, \tau_{eH}}$$

where:

Q_{cg} : Design shear force imposed on the web plating at the lower end of the corrugation, in kN.

$$Q_{cg} = \frac{s_{cg}\, \ell_{cg} |3P_l + P_u|}{8000}$$

P_l : Design pressure given in Pt 1, Ch 6, Sec 2, Table 1 for the design load set being considered, calculated at the lower end of the corrugation, in kN/m^2.

P_u : Design pressures given in Pt 1, Ch 6, Sec 2, Table 1 for the design load set being considered, calculated at the upper end of the corrugation, in kN/m^2.

d_{cg} : Depth of corrugation, in mm, see Figure 4.

$C_{t\text{-}cg}$: Permissible shear stress coefficient:

$C_{t\text{-}cg}$ = 0.75 for acceptance criteria set AC-S.

$C_{t\text{-}cg}$ = 0.90 for acceptance criteria set AC-SD.

2.2.3 Net thicknesses of the flanges over the height

The net thicknesses of the flanges of corrugated bulkheads, t_f in mm, for two thirds of the corrugation length from the lower end are to be taken as the greatest value calculated for all applicable design load sets, as given in Pt 1, Ch 6, Sec 2, [2], and given by the following. This requirement is not applicable to corrugated bulkheads without a lower stool.

$$t_f = \frac{6.57\, b_{f-cg} \sqrt{\sigma_{bdg-max}}}{C_f} 10^{-3}$$

where:

$\sigma_{bdg\text{-}max}$: Maximum value of the vertical bending stresses in N/mm^2 in the flange. The bending stress is to be calculated at the lower end and at the mid span of the corrugation length.

$$\sigma_{bdg-max} = \frac{M_{cg}}{Z_{cg-act}} 10^3$$

M_{cg} : Vertical bending moment, in kNm, as defined in [2.2.4].

$Z_{cg\text{-}act}$: Actual net section modulus at the lower end and at the mid length of the corrugation, in cm^3.

$b_{f\text{-}cg}$: Breadth of flange plating, in mm. See Figure 4.

$b_{w\text{-}cg}$: Breadth of web plating, in mm. See Figure 4.

C_f : Coefficient taken as:

$$C_f = 7.65 - 0.26 \left(\frac{b_{w-cg}}{b_{f-cg}} \right)^2$$

2.2.4 Net section modulus over the height

The net section modulus at the lower and upper ends and at the mid length of the corrugation (ℓ_{cg} / 2) of a unit corrugation, Z_{cg} are to be taken as the greatest value calculated for all applicable design load sets, as given in Pt 1, Ch 6, Sec 2, [2] and given by the following.

$$Z_{cg} = \frac{1000\, M_{cg}}{C_{s-cg}\, R_{eH}}$$

where:

M_{cg} : Vertical bending moment in kNm.

$$M_{cg} = \frac{C_i |P| s_{cg}\, \ell_0^2}{12000}$$

P : Averaged pressure in kN/m^2.

$$P = \frac{P_u + P_l}{2}$$

P_l, P_u : Design pressure given in Pt 1, Ch 6, Sec 2, Table 1 for the design load set being considered, calculated at the lower and upper ends of the corrugation, respectively, in kN/m^2:

- For transverse corrugated bulkheads, the pressures are to be calculated at a section located at b_{tk} / 2 from the longitudinal bulkheads of each tank.
- For longitudinal corrugated bulkheads, the pressures are to be calculated at the ends of the tank, i.e. the intersection of the forward and aft transverse bulkheads and the longitudinal bulkhead.

b_{tk} : Maximum breadth of tank under consideration measured at the bulkhead, in m.

ℓ_o : Effective bending span of the corrugation, in m, measured from the mid depth of the lower stool to the mid depth of the upper stool. Where no lower or upper stool is fitted, ℓ_o is to be measured to lower or upper end. See Figure 4.

C_i : Bending moment coefficient given in Table 7.

$C_{s\text{-}cg}$: Permissible bending stress coefficient at the mid-length of the corrugation length, ℓ_{cg}:

$C_{s\text{-}cg} = c_e$ but not to be taken as greater than 0.75 for acceptance criteria set AC-S.

$C_{s\text{-}cg} = c_e$ but not to be taken as greater than 0.90 for acceptance criteria set AC-SD.

At the lower and upper ends of the corrugation length, ℓ_{cg}:

$C_{s\text{-}cg} = 0.75$ for acceptance criteria set AC-S.

$C_{s\text{-}cg} = 0.90$ for acceptance criteria set AC-SD.

c_e : Coefficient taken as:

$$c_e = \frac{2.25}{\beta} - \frac{1.25}{\beta^2} \quad \text{for } \beta \geq 1.25$$

$$c_e = 1.0 \quad \text{for } \beta < 1.25$$

β : Coefficient taken as:

$$\beta = \frac{b_{f\text{-}cg}}{t_f}\sqrt{\frac{R_{eH}}{E}}$$

$b_{f\text{-}cg}$: Breadth of flange plating, in mm, see Figure 4.

t_f : Net thickness of the corrugation flange, in mm.

Table 7 : Values of C_i

Bulkhead	At lower end of ℓ_{cg}	At mid-length of ℓ_{cg}	At upper end of ℓ_{cg}
Transverse bulkhead	C_1	C_{m1}	0.65 C_{m1}
Longitudinal bulkhead	C_3	C_{m3}	0.65 C_{m3}

where:

C_1 : Coefficient taken as:

$$C_1 = a_1 + b_1\sqrt{\frac{A_{dt}}{b_{dk}}} \quad \text{but taken not less than 0.60.}$$

$$C_1 = a_1 - b_1\sqrt{\frac{A_{dt}}{b_{dk}}} \quad \text{for transverse bulkhead with no lower stool, but taken not less than 0.55.}$$

a_1 : Coefficient taken as:

$$a_1 = 0.95 - \frac{0.41}{R_{bt}}$$

$a_1 = 1.0$ for transverse bulkhead with no lower stool.

b_1 : Coefficient taken as:

$$b_1 = -0.20 + \frac{0.078}{R_{bt}}$$

$b_1 = 0.13$ for transverse bulkhead with no lower stool.

C_{m1} : Coefficient taken as:

$C_{m1} = a_{m1} + b_{m1}\sqrt{\frac{A_{dt}}{b_{dk}}}$ but not taken less than 0.55.

$C_{m1} = a_{m1} - b_{m1}\sqrt{\frac{A_{dt}}{b_{dk}}}$ for transverse bulkhead with no lower stool, but not taken less than 0.60.

a_{m1} : Coefficient taken as:

$a_{m1} = 0.63 + \frac{0.25}{R_{bt}}$

$a_{m1} = 0.85$ for transverse bulkhead with no lower stool.

b_{m1} : Coefficient taken as:

$b_{m1} = -0.25 - \frac{0.11}{R_{bt}}$

$b_{m1} = 0.34$ for transverse bulkhead with no lower stool.

C_3 : Coefficient taken as:

$C_3 = a_3 + b_3\sqrt{\frac{A_{dl}}{\ell_{dk}}}$ but not taken less than 0.60.

$C_3 = a_3 - b_3\sqrt{\frac{A_{dl}}{\ell_{dk}}}$ for longitudinal bulkhead with no lower stool, but not taken less than 0.55.

a_3 : Coefficient taken as:

$a_3 = 0.86 - \frac{0.35}{R_{bl}}$

$a_3 = 1.0$ for longitudinal bulkhead with no lower stool.

b_3 : Coefficient taken as:

$b_3 = -0.17 + \frac{0.10}{R_{bl}}$

$b_3 = 0.13$ for longitudinal bulkhead with no lower stool.

C_{m3} : Coefficient taken as:

$C_{m3} = a_{m3} + b_{m3}\sqrt{\frac{A_{dl}}{\ell_{dk}}}$ but not taken less than 0.55.

$C_{m3} = a_{m3} - b_{m3}\sqrt{\frac{A_{dl}}{\ell_{dk}}}$ for longitudinal bulkhead with no lower stool, but not taken less than 0.60.

a_{m3} : Coefficient taken as:

$a_{m3} = 0.32 + \frac{0.24}{R_{bl}}$

$a_{m3} = 0.85$ for longitudinal bulkhead with no lower stool.

b_{m3} : Coefficient taken as:

$b_{m3} = -0.12 - \frac{0.10}{R_{bl}}$

$b_{m3} = 0.19$ for longitudinal bulkhead with no lower stool.

R_{bt} : Coefficient taken as:

$$R_{bt} = \frac{A_{bt}}{b_{ib}}\left(1+\frac{\ell_{ib}}{b_{ib}}\right)\left(1+\frac{b_{av-t}}{h_{st}}\right) \quad \text{for transverse bulkheads.}$$

R_{bl} : Coefficient taken as:

$$R_{bl} = \frac{A_{bl}}{l_{ib}}\left(1+\frac{\ell_{ib}}{b_{ib}}\right)\left(1+\frac{b_{av-l}}{h_{sl}}\right) \quad \text{for longitudinal bulkheads.}$$

A_{dt} : Cross sectional area enclosed by the moulded lines of the transverse bulkhead upper stool, in m^2.

$A_{dt} = 0$ if no upper stool is fitted.

A_{dl} : Cross sectional area enclosed by the moulded lines of the longitudinal bulkhead upper stool, in m^2.

$A_{dl} = 0$ if no upper stool is fitted.

A_{bt} : Cross sectional area enclosed by the moulded lines of the transverse bulkhead lower stool, in m^2.

A_{bl} : Cross sectional area enclosed by the moulded lines of the longitudinal bulkhead lower stool, in m^2.

$b_{av\text{-}t}$: Average width of transverse bulkhead lower stool, in m. See Figure 4.

$b_{av\text{-}l}$: Average width of longitudinal bulkhead lower stool, in m. See Figure 4.

h_{st} : Height of transverse bulkhead lower stool, in m. See Figure 4.

h_{sl} : Height of longitudinal bulkhead lower stool, in m. See Figure 4.

b_{ib} : Breadth of cargo tank at the inner bottom level between hopper tanks, or between the hopper tank and centreline lower stool, in m. See Figure 4.

b_{dk} : Breadth of cargo tank at the deck level between upper wing tanks, or between the upper wing tank and centreline deck box or between the corrugation flanges if no upper stool is fitted, in m. See Figure 4.

ℓ_{ib} : Length of cargo tank at the inner bottom level between transverse lower stools, in m. See Figure 4.

ℓ_{dk} : Length of cargo tank at the deck level between transverse upper stools or between the corrugation flanges if no upper stool is fitted, in m. See Figure 4.

Figure 4 : Definition of parameters for corrugated bulkhead (Tankers with longitudinal bulkhead at centreline)

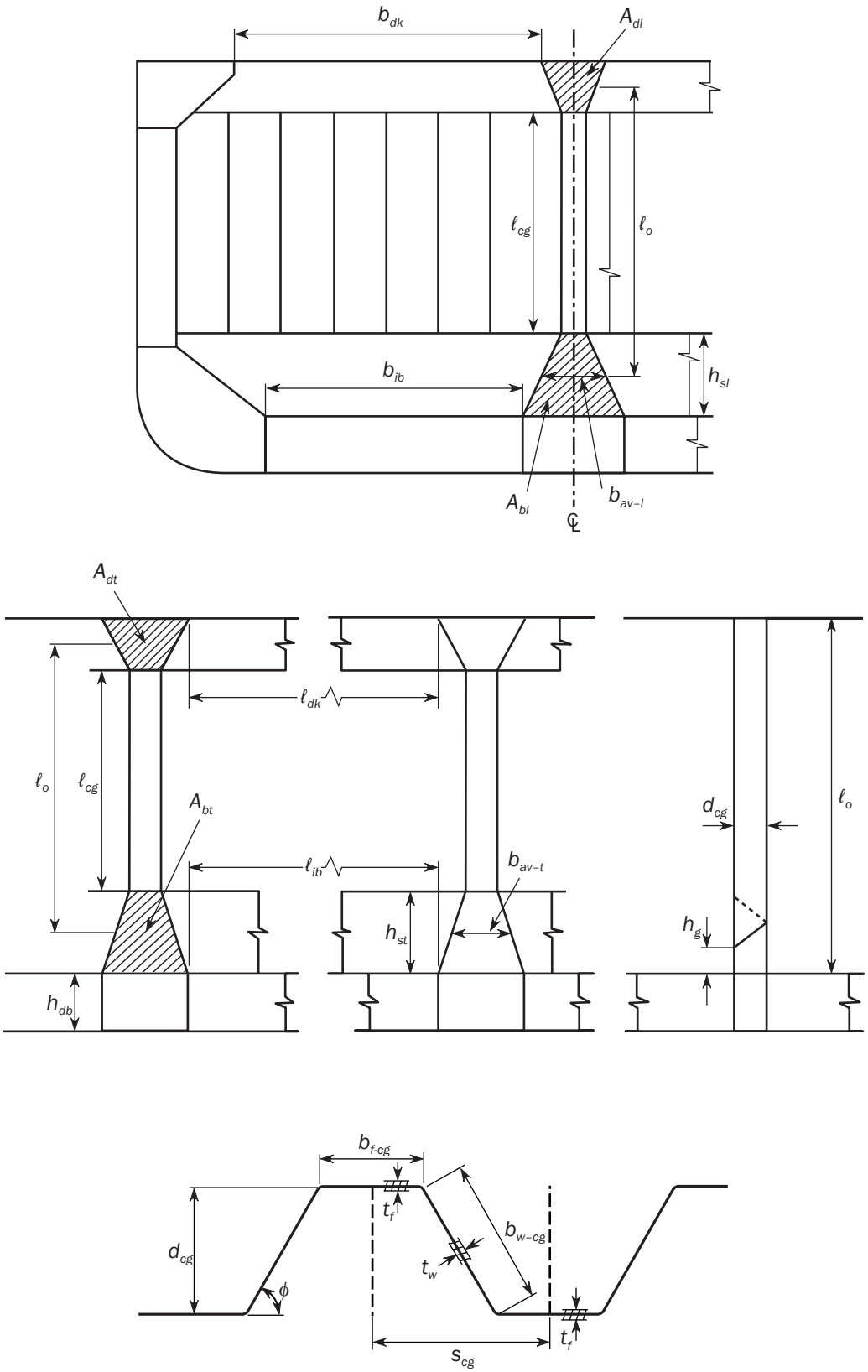

SECTION 4
HULL OUTFITTING

1 SUPPORTING STRUCTURES FOR COMPONENTS USED IN EMERGENCY TOWING ARRANGEMENTS

1.1 General

1.1.1

It is the responsibility of the designer to provide emergency towing arrangements fitted at both the bow and stern of every tanker with a deadweight of 20,000 tonnes or more, as required by SOLAS, as amended.

[RCN1 to 01 JAN 2020]

1.1.2

The designer is reminded that design and construction of the towing arrangements are to be approved by the Flag Administration or the Society on their behalf.

[RCN1 to 01 JAN 2020]

1.2 Documents to be submitted

1.2.1

Plans showing details of the supporting structure for the emergency towing arrangement, including the connection to the deck, are to be provided for approval. Information on emergency towing arrangement showing sufficient detail to enable the position and direction of load actions to be ascertained is to be submitted for reference.

1.3 Structural arrangement

1.3.1 Continuity of strength

The structural arrangement is to provide continuity of strength.

1.3.2 Stress concentrations

The structural arrangement of the ship's structure in way of the emergency towing equipment is to be such that, abrupt changes of shape or section are to be avoided in order to minimise stress concentrations. Sharp corners and notches are to be avoided, especially in high stress areas.

1.4 Minimum thickness requirements

1.4.1 Deck plating

The deck in way of strong-points and fairleads is to have a minimum gross thickness of 15 mm.

1.5 Loads

1.5.1 Safe working loads

Safe working load of emergency towing arrangements is not to be taken less than:

- 1,000 kN for tankers having a deadweight greater than or equal to 20,000 t, but less than 50,000 t.
- 2,000 kN for tankers having a deadweight greater than or equal to 50,000 t.

1.5.2 Load case

The design load for the connection of the strong-point and fittings to the deck and its supporting structure is to be taken as twice the safe working load. Information on lines of action of the applied design load provided in emergency towing arrangement plan is to be taken into account.

1.6 Scantling requirements

1.6.1 General

The scantlings of the support structure are to be dimensioned to ensure that for the load cases specified in [1.5.2], the calculated stresses in the support structure do not exceed the permissible stress levels specified in [1.6.3].

The capacity of the structure to resist buckling failure is also to be assured.

1.6.2 Calculation procedure

These requirements are to be assessed using a simplified engineering analysis based on elastic beam theory, two dimensional grillage or finite element analysis using gross scantlings.

1.6.3 Permissible stresses

For the design load given in [1.5.2], the shear stresses and normal stresses, including bending stresses induced in the supporting structure and welds, in way of strong-points and fairleads, are not to be exceed the permissible values given below based on the gross thickness of the structure:

- Normal stress, 1.00 R_{eH}.
- Shear stress, 0.58 R_{eH}.

2 MISCELLANEOUS DECK ATTACHMENTS

2.1 Cargo manifolds

2.1.1 Cargo manifold support

The design of the cargo manifold support is to be such as to distribute the loads imposed on the pipework into the ship structure in seagoing or in harbour operations during loading and unloading. To achieve this, the connection of the cargo manifold support to the deck is to be arranged to align with stiffening members of the main hull structure or stiffening is to be fitted in order to avoid the creation of hard points. Attention is to be paid to the detail design of the structure forming the deck attachment in order to minimise the effects of change of section. The arrangement of such details and their approval is considered on a case-by-case basis by the Society.

3 GUARD RAILS AND BULWARKS

3.1 General

3.1.1

Generally, open guard rails are to be fitted on the upper deck. Plate bulwarks, with a 230 mm high continuous opening, at the lower edge, may be accepted provided the arrangement allows for the acceptable handling of spillage on deck and minimises the possibility for accumulation of volatile gas.

3.1.2

Deck spills are to be prevented from spreading to the accommodation and service areas and from discharge into the sea by a permanent continuous coaming with a minimum height of 100 mm surrounding the cargo deck. Along the sides at the aft end of the cargo deck of oil tankers, the coaming is to have a minimum height of 300 mm extending a minimum of 4.5 m forward from each corner. At the aft end of the cargo deck, the coaming is to have a minimum height of 300 mm and is to extend from side to side of the ship.

3.1.3

Scupper plugs of mechanical type are to be provided. Means of draining or removing oil or oily water within the coaming are also to be provided.